CV6 D

NOT TO BE PUBLISHED

The information given in this document is not to be communicated either directly, or indirectly, to the Press or to any person not holding an official position in His Majesty's Service.

WORKING INSTRUCTIONS

WIRELESS SET No. 19 MARK II

(As Manufactured in Canada and the U. S. A.)

1K7G-EF7-2A VTE VTD
6V6G-EL12 V8A
CV6D-
V7A
x.12

Published by:
The Director of Signals Design,
Army Engineering Design Branch,
Department of Munitions and Supply,
Ottawa, Canada.

Approved by:
The Chief of the General Staff,
Department of National Defence,
Ottawa, Canada.

(Ref. No. PC 90772C-195) **1st July, 1942.**

NOT TO BE PUBLISHED

The information given in this document is not to be communicated either directly, or indirectly, to the Press or to any person not holding an official position in His Majesty's Service.

WORKING INSTRUCTIONS

WIRELESS SET No. 19 MARK II

(As Manufactured in Canada and the U. S. A.)

Published by:
The Director of Signals Design,
Army Engineering Design Branch,
Department of Munitions and Supply,
Ottawa, Canada.

Approved by:
The Chief of the General Staff,
Department of National Defence,
Ottawa, Canada.

(Ref. No. PC 90772C-195) **1st July, 1942.**

For installation instructions refer to installation prints and other details in envelope packed with Installation Kit.

WIRELESS SET No. 19 MARK II

Contents

INTRODUCTION

CHAPTER I

GENERAL DESCRIPTION

		Page
1.1	Purpose	1
1.2	Installation	2
1.3	The "A" Set	3
	1.3.1 Frequency Range	3
	1.3.2 Aerials	3
	1.3.3 Receiver Circuit	4
	1.3.4 Sender Circuit	4
	1.3.5 Aerial Circuit	5
1.4	The "B" Set	6
1.5	The Intercommunication Amplifier	7
1.6	The Supply Unit	7
1.7	Current Drain	8
1.8	The Control Units and Junction Distribution Boxes	8
1.9	The Controls	9

CHAPTER II

WORKING INSTRUCTIONS

2.1	Preliminary	20
2.2	Tuning the "A" Set	21
	2.2.1 Tuning and Netting of Receiver	21
	2.2.2 Tuning of Sender	22
	2.2.3 The "Flick" Dials	23
2.3	Tuning the "B" Set	25
2.4	The Control and Intercommunication System	26
2.5	Checking for Correct Operation	27

DIAGRAMS

		Page
Fig. 1	Block—Diagram	77
Fig. 2	Schematic of Variometer	79
Fig. 3	Complete Schematic of Wireless Set No. 19 Mk. II	81
Fig. 4	Schematic of Supply Unit	83
Fig. 5	Top Plan of Chassis	85
Fig. 6	Underneath Plan of Chassis	87
Fig. 7	Controls on Front Panel	89
Fig. 7A	Flick Control	89
Fig. 8	Wiring Layout of Infantry Tank Mk. III Installation	91
Fig. 9	Wiring Layout of U. S. Medium Tank M4	93

PHOTOGRAPHS

1.	Front view of Set and Supply Unit	61
2.	Front view with Guard and Waterproof Cover	63
3A.	Inside view of Sender/Receiver (Top)	65
3B.	Inside view of Sender/Receiver (Underneath)	67
4.	Inside view of Variometer	69
5.	Inside view of Supply Unit	71
6.	Installation Equipment for Infantry Tank Mk. III	73
7.	Installation Equipment for U. S. Medium Tank M4	75

TABLES

		Page
1.	Overall Dimensions, Weights	1
2.	Facilities of Complete Station	1
3.	Aerials	3
4.	Valves (Designations, Types, Functions and Circuit Details)	10
5.	Controls and Adjustments	14
6.	Control System on Infantry Tank Mk. III	28
7.	Control System on U. S. Medium Tank M4	31
8.	Normal Meter Readings	34
9.	Parts and Component List	35
10.	"Set and Standard" Kit	51
11.	Interchangeability List	55

ABBREVIATIONS

A	"A" Set	MA	Milliampere
AE	Aerial	MC	Megacycles per second
AF	Audio Frequency		
AVC	Automatic Volume Control	MCW	Modulated Continuous Wave
B	"B" Set	MFD	Micro-farad
BFO	Beat Frequency Oscillator	MMF	Micro-micro-farad
		OSC	Oscillator
CW	Continuous Wave	PA	Power Amplifier
DF	Direction Finding	RF	Radio Frequency
H	Henry	R/T	Radio Telephony (Speech)
HF	High Frequency		
HT	High Tension	S/R	Sender/Receiver
IC	Intercommunication Amplifier	V	Volts
		W	Watts
LT	Low Tension		

INTRODUCTION

WIRELESS SET NO. 19, MARK II

(As Manufactured in Canada and the U. S. A.)

1. Although mechanically and electrically interchangeable in the major components, a number of modifications were considered essential, and were incorporated prior to manufacture both in Canada and the U. S. A. Primarily, these modifications were introduced in order to accommodate Canadian and U. S. A. manufacturing processes.

2. From the viewpoint of the operator, there should be no difference between the British and the Canadian Set. In order to assist operators to master quickly the operation of the Set, and, therefore, to derive the maximum of performance in the field, the operating instructions have been recorded in somewhat greater detail than in the British pamphlet.

3. In order to assist maintenance personnel, a table has been added (Table XI), in which the major modifications in Canadian and American Sets have been recorded.

CHAPTER I

GENERAL DESCRIPTION

1.1 PURPOSE

Wireless Set No. 19, Mk. II, has been designed to be used in Armoured Fighting Vehicles (A. F. V.), in various Wireless Trucks, and as a ground station.

The Set consists of an "A" Set (Sender-Receiver), a "B" Set (Sender-Receiver), an Intercommunication (I.C.)—Amplifier, and a Supply Unit.

Table I shows weight and overall dimensions of Set and Supply Unit, Table II shows the facilities, purposes and ranges of the complete No. 19 Set, Mk. II.

TABLE I
WEIGHTS AND DIMENSIONS

Unit	Weight in lb.	Dimensions in Inches		
		Length	Depth	Width
Sender/Receiver	40½	17½	8¼	12¼
Supply Unit	28½	6	8¼	12¼
Carrier No. 1	14¾			
Wireless Set No. 19, comprising Sender, Receiver, Supply Unit and Carrier No. 1...	86¼	27	10	13¼

TABLE II
FACILITIES PROVIDED BY A COMPLETE STATION No. 19, MK. II

Item	Panel Designation	Frequency Range Mc/s	Purpose	Type of Service	Range
A-Set	A	2-8	Communication: troop to base or troop to troop	R/T C. W. M. C. W.	10 miles R/T between vehicles in motion with 8′ rod aerial on each vehicle

(Table continued on next page)

TABLE II—Continued

FACILITIES PROVIDED BY A COMPLETE STATION No. 19, MK. II—Continued

Item	Panel Designation	Frequency Range Mc/s	Purpose	Type of Service	Range
B-Set	B	230-240 Mc/s	Communication between vehicles only in a troop	R/T	1,000 yards between vehicles in motion with half-wave aerial supplied
Intercommunication Amplifier	I-C	Speech only	Communication among the crew	Speech	

The following valves are used:

Quantity	Designation	Type
6	6K7G EF 7	R. F. Pentode
2	6K8G	Triode-Hexode
2	6V6G EL 32	Output Pentode
1	6B8G	Double Diode-Pentode
1	6H6 (ARDD5)	Double Diode
1	E-1148 (CV6)	Triode (low capacity)
1	EF50 (ARP 35)	R. F. Pentode
1	807 (ATS 25)	Beam Tetrode

1.2 INSTALLATION

A complete station is packed in two "Kits": One is known as "Set and Standard Kit," the other one as "Installation Kit."

The Sender-Receiver ("A" and "B" Set, I.C. Amplifier), Supply Unit, Variometer and all other parts which are common to all installations, are packed in one box. This is called the "Set and Standard Kit," and it comprises all the items contained in the British "Set Kit" and "Standard Kit." (Table X.)

For every type of vehicle in which the No. 19 Set is used, a second separate kit, called the "Installation Kit," is provided, which contains all the parts necessary for the installation in a particular vehicle.

1.3 The "A" Set. (Figs. 1, 2, 3, 7, Tables III, IV, V.)

1.3.1 FREQUENCY RANGE

The Set covers the frequency Range from 2 Mc/s (150M) to 8 Mc/s (37.5M) in two bands. One band covers from 2 Mc/s (150M) to 4½ Mc/s (66.6M) and the other from 4½ Mc/s (66.6M) to 8 Mc/s (37.5M). The desired band is selected by switch S11A (See Fig. 7), which will be referred to as the Band-Change switch.

1.3.2 AERIALS

The "A" Set is designed primarily for use with 8′ or 12′ rod aerials of the type supplied with the equipment. Where short range communication only is required under conditions in which the 8′ aerial would be regarded as too conspicuous, a single 4′ section may be used.

Any of the usual types of elevated aerials can be used with the "A" Set, and the conditions governing the connection and tuning of the two most suitable types are set out in Table III.

TABLE III
AERIALS FOR "A" SET

Description of Aerial	Method of Coupling	Method of Tuning
Whip aerial. Three 4 Ft. sections (Vertical)	Mounted on Aerial Base No. 8; connected to Variometer, which is connected to AE socket on panel.	Tuned for maximum reading of test meter by successive adjustments of Variometer and "P.A. Tuning."
Three-quarter wave end-fed aerial (Horizontal)	Erected at the greatest possible elevation; connected to Variometer which is connected to AE socket on panel. The use of a proper Earth will greatly improve radiation.	Tuned as above. Length of wire to cover the appropriate frequency bands should be: **Length** — **Frequency** 250′ — 2-2.65 Mc/s 185′ — 2.6-3.5 Mc/s 150′ — 3.45-4.5 Mc/s 110′ — 4.45-5.6 Mc/s 90′ — 5.55-6.65 Mc/s 70′ — 6.6-8.0 Mc/s

1.3.3 RECEIVER CIRCUIT (Fig 3)

The receiver is of the Superheterodyne type. The intermediate frequency (I.F.) is 465 Kc/s.

The receiver comprises the following stages:

Stage	Valve	
	Type	Designation
(1) Signal Frequency	6K7G	V1A
(2) Oscillator, Frequency Changer	6K8G	V2A
(3) I.F. Amplifier	6K7G	V1B
(4) I.F. Amplifier	6K7G	V1C
(5) Detector, A.V.C., Audio Amplifier	6B8G	V3A
(6) Heterodyne Oscillator (Beat Frequency Oscillator, B.F.O.)	6K8G	V2B

1.3.4 SENDER CIRCUIT (Fig. 3)

In order to eliminate separate adjustment of the sender, and to assure that always the same frequency is transmitted and received, the outputs of the receiver oscillator and the Het. Oscillator are mixed in Valve V.2.B to reconstitute a sender frequency equal to the frequency to which the receiver is tuned. This frequency is selected by the tuned buffer stage V.5.A. (ARP 35 or EF 50), and the output of this stage is applied to the grid of the Power Amplifier (P.A.)—stage V.4.A. (807). Bias for the P.A. stage is obtained by rectification from the output of V.5.A. in the diode V.6.A. (ARDD 5 or 6 H 6), and the input voltage and bias are held constant by bias applied to the grid of V.5.A. and obtained from the delayed diode rectifier V.6.A. (ARDD 5 or 6 H 6). The output of the Power Amplifier is coupled to the aerial by means of a low impedance line Aerial Feeder No. 1, connected to a suitable tapping on the tank coil, L.3.A. The aerial is inductively loaded to resonance by means of the Aerial Tuning Variometer L.1.A., which is located in all cases as near as possible to the base of the aerial.

The Sender comprises the following stages:

Stage	Valve	
	Type	Designation
(1) Receiver Oscillator	6K8G	V2A
(2) Heterodyne Oscillator and Mixer	6K8G	V2B
(3) Buffer Stage	ARP35 or EF50	V5A
(4) Power Amplifier	807	V4A
(5) Modulator (on R.T.), A.F. Oscillator and Modulator (on M.C.W.)	6B8G	V3A
(6) Grid Bias & Automatic Drive Control	ARDD5 or 6H6	V6A

Table IV shows designation, type, function and circuit details of every valve.

1.3.5 AERIAL CIRCUIT (Fig. 2)

A tuned circuit consisting of L.3.A., C.3.A. (labeled "P.A. Tuning" on the panel) is used to tune the grid of V.1.A., when receiving, and the anode of V.4.A., when sending.

The aerial is tuned to resonance by the Variometer L.1.A. and this series resonance circuit is connected to a tap on the Tank Coil L.3.A. via a special feeder. The entire aerial circuit within the vehicle is fully screened to reduce interference from other electrical equipment within the vehicle.

The Variometer assembly includes a current transformer T.1.A. and a rectifier unit W.1.A., enabling the R.F. current to be measured in the aerial lead at the point where it leaves the Variometer. The D.C. current from the rectifier is fed back to the set over the aerial feeder and measured by the meter on the panel, when the meter switch S.8.A., is set to "AE." (See Fig. 2 and Photo 4.)

From the Variometer the aerial lead is taken to Aerial Base No. 8 (the type of feeder, etc., depends on the type of vehicle) into which one, two or three sections of the whip aerial (Aerial, Type F) are inserted.

NOTE: The Variometer supplied with No. 19 Set, Mk. II, is a Mk. II version. It includes an adjustment permitting

calibration of D.C. output of rectifier W.1.A. and a filter circuit for D.C. The Variometer is calibrated at the factory prior to shipment. It will retain its calibration in normal service, and the adjusted rheostat should not be touched.

However, should it become necessary to recalibrate at any time, this may be done by setting up a station with a Variometer which operates satisfactorily, and noting the Test Meter reading with switch to "AE" and set "in tune." The Variometer to be calibrated may then be inserted in place of the normal Variometer, tuned to give maximum output, and the meter adjustment rheostat (M) in Variometer rotated to give approximately the reading noted with previous Variometer. It will be as well to check the readings at low (say 2.5) and high (say 7.5) Mc/s. Refer to the tag enclosed with Variometer Mk. II.

1.4 THE "B" SET CIRCUIT (Fig. 3)

The "B" Set is a very high frequency (V.H.F.) Sender-Receiver. It covers the frequency range from 230 Mc/s (1.3 M) to 240 Mc/s (1.2 M).

The Sender comprises the following stages:

Stage	Valve	
	Type	Designation
1. Audio Amplifier	6K7G	V1E
2. Audio Amplifier & Modulator	6V6G	V8A
3. Master Oscillator & Output Stage	E 1148 or CV6	V7A

The Receiver comprises the following stages:

Stage	Valve	
	Type	Designation
1. R.F. Stage	E 1148 or CV6	V7A
2. Quench Frequency Oscillator	6K7G	V1D
3. Audio Amplifier	6K7G	V1E
4. Audio Amplifier (Output)	6V6G	V8A

The output of the "B" Set is fed through a special feeder from the terminal marked "Aerial B" straight to the Aerial Base No. 9. No special tuning of the aerial circuit is necessary, as it is tuned, when tuning the master oscillator by operating "Tuning B" (C 25 A).

1.5 THE INTERCOMMUNICATION AMPLIFIER (Fig. 3)

The I.C. Amplifier provides communication for the crew within the vehicle. It is a two-stage amplifier, comprising the following stages:

Stage	Valve	
	Type	Designation
1. Pre-Amplifier	6K7G	V1F
2. A.F. Output	6V6G	V8B

1.6 THE SUPPLY UNIT (Fig. 4)

Supply Unit No. 1 consists of a Rotary Transformer, associated filter circuits, input and output plug mounts (PL1C, PL1B), ON-OFF switch (S 6 A), pilot lamp (P 1 A), fuses (F 1 A, F 1 B), etc.

The Rotary Transformer is a three commutator machine, operating from a nominal L.T. input of 12 volts. It provides two high voltage D.C. outputs, one of 275 volts and the other of 500 volts. These outputs are smoothed by filter circuits mentioned above. The L.T. input circuit to the Rotary Transformer is floating (i. e., ungrounded). It is opened and closed by a section of the OFF-ON Switch S 6 A.

The Low Tension (12 volts) circuit for the valve heaters, pilot lamps, and relay operation is carried from the input plug mount (PL 1 C) to the output plug mount (PL 1 B) through section of switch S 6 A. One side of this circuit (the negative) is grounded to the case of the Power-Supply Unit.

Since the L.T. Rotary Transformer circuit is floating, it may be operated across one 12-volt section of a 24-volt battery while the L.T. valve heater circuit is operated across the other section of the battery (grounded section).

Since the current drain of the L.T. Rotary Transformer, when sending on "A" Set, is higher than that of the valve heater circuit, it is essential that the 12-volt tap from a 24-volt battery be brought out and connected to the junction of positive L.T. Heater and negative L.T. Rotary Transformer.

IT IS IMPORTANT THAT THIS 12-VOLT TAP ON 24-VOLT BATTERY BE IN POSITION WHILE THE WIRELESS SET IS OPERATING. SHOULD IT GO OPEN WITH THE "A" SET SENDING, THE VALVE HEATERS WILL BE PERMANENTLY DAMAGED. FOR THIS REASON NO FUSE SHOULD BE USED IN THIS 12-VOLT TAP.

1.7 CURRENT DRAIN

With a battery voltage of 12 volts, the current drain of the No. 19 Set is:

for "A" Receiver only	6.5 A
for "A" Sender on R/T	7.5 A
for "A" Sender on C.W.	9.0 A
for "A" Receiver, "B" Receiver, I.C. Amplifier	8.0 A

1.8 CONTROL UNITS AND JUNCTION DISTRIBUTION BOXES

The control units and junction distribution boxes are installed within easy reach of every man who has to make use of the facilities provided by the No. 19 Set.

Junction distribution boxes are connected to the Intercommunication system only. Junction distribution No. 1 and 3 have a special buzzer operated by a push-button. The signal produced by this buzzer can be heard in the Commander's earphones and serves as emergency signal.

The type and number of control units depends on the vehicle in which the station is installed. The installation instructions supplied with every installation kit and vehicle contain detailed descriptions on how to install the whole station.

The control unit is connected to the set by a special connector. This connector carries all the leads for microphone, receiver, pressel switch, etc. The unit itself has one or sev-

eral drop-leads, with snatch-plugs for Microphone and Receiver Headgear. By means of a selector switch on the control unit the required facility may be selected. This arrangement enables the separate, independent use of every facility provided by the No. 19 Set.

Very soon, all existing control units will be replaced by Control Units Mark II. The special feature of this unit is the "Re-Broadcast" or "Re-Transmit" facility. It has, in addition to the selector switch, a second two-position switch. The positions are marked "N" and "R." In the "N" position a Mark II unit works like a Mark I unit and provides the normal facilities.

In the "R" position (R for Re-Broadcast), the following additional possibilities are made available:

(1) "Receive" on "B" and "Send" on "A" Set. (Output of "B" modulates the "A" Sender.)

(2) "Send" or "Receive" on "A" and "B" simultaneously.

(3) "Receive" on "A" and "Send" on "B" Set. (Output of "A" modulates the "B" Sender.) (See switching charts on Tables VI and VII for operation and facilities in two particular installations.)

A vehicle equipped with a Mark II Control Unit can act as Relay Station, and, at the same time, enable the Commander of this vehicle to add his own speech to the rebroadcast.

1.9 THE CONTROLS

The details, functions and operation of all the controls are shown on Table V. The positions may be seen on Photo 1 and Fig. 7.

TABLE IV
VALVE DESIGNATIONS, TYPES, FUNCTIONS AND CIRCUIT DETAILS

	Valve	Designation	Type	Function	Circuit and Intervalve Coupling Details
"A" SET RECEIVER	V.1.A.	6K7G	R. F. Pentode	R. F. Amplifier	Tuned R. F. Transformer L.23A and L.23B to Grid of V.2.A.
	V.2.A	6K8G	Triode-Hexode	Oscillator-Mixer	Two-Circuit Tuned I. F. (465 kc.) Transformer L.8.A. to Grid of V.1.B.
	V.1.B.	6K7G	R. F. Pentode	I. F. Amplifier	Two-Circuit Tuned I. F. (465 kc.) Transformer L.8.B. to Grid of V.1.C.
	V.1.C.	6K7G	R. F. Pentode	I. F. Amplifier	Two-Circuit Tuned I. F. (465 kc.) Transformer L.9.A. to Diode Elements in V.3.A.
	V.3.A.	6B8G	Double Diode-R. F. Pentode	Demodulator, Bias Rectifier & A. F. Output	Audio-Frequency Output Transformer T.2.A. to No. 19 Telephone Line in Vehicle Wiring.
	V.2.B.	6K8G	Triode-Hexode	Triode as Oscillator only	Heterodyne Oscillator for C. W. Reception tuned near 465 kc. and adjustable over a small Frequency Range to enable the Beat Tone to be varied.

(Table continued on next page)

TABLE IV—Continued

VALVE DESIGNATIONS, TYPES, FUNCTIONS AND CIRCUIT DETAILS—Continued

	Valve	Designation	Type	Function	Circuit and Intervalve Coupling Details
"A" SET SENDER	V.2.A.	6K8G	Triode-Hexode	Triode as Oscillator only	Oscillates as in Receiver and Output applied to Hexode Control Grid of V.2.B. for mixing with Output of Triode Oscillator V.2.B. now tuned to 465 kc.
	V.2.B.	6K8G	Triode-Hexode	Oscillator-Mixer	Produces Master Frequency by mixing Output of Receiver Oscillator and Heterodyne Oscillator. Tuned Anode coupled to Grid of V.5.A.—(L.7.A. or L.21.A, C.9.D.)
	V.5.A.	ARP 35 EF 50	R. F. Pentode	R. F. Amplifier and Buffer	Coupled by Tuned Transformer L.4.A. or L.6.A. to V.4.A. and V.6.A.
	V.4.A.	807	Beam Tetrode	R. F. Power Amplifier	Coupled by Tuned Anode L.3.A. and C.3.A. and Low-Impedance Line, through Aerial Feeder No. 1 to Series Tuned Aerial. Grid modulated by V.3.A.

(Table continued on next page)

TABLE IV—Continued

VALVE DESIGNATIONS, TYPES, FUNCTIONS AND CIRCUIT DETAILS—Continued

	Valve	Designation	Type	Function	Circuit and Intervalve Coupling Details
"A" SET SENDER	V.3.A.	6B8G	Double Diode-R. F. Pentode	Pentode only as Modulator	Anode Coupled to Grid of V.4.A. Through C.17.B. and R.7.G.
	V.6.A.	6 H 6 ARDD5	Double Diode	Twin Rectifier	One element supplies Standing Bias for V.4.A. the other element supplies A.D.C. Bias to V.4.A. to maintain constant drive over the Frequency Range.
"B" SET RECEIVER	V.7.A.	E 1148 C V 6	Low Capacity Triode	Super-Regenerative Detector	Resistance Coupled to L.F. Amplifier V.1.E.
	V.1.D.	6K7G	R. F. Pentode	Quench Oscillator	Oscillates at a frequency between 158 and 228 KC. determined by the Permeability Tuned Coil L.14.A. Frequency is adjusted by "Quench" Control on Set Panel.
	V.1.E.	6K7G	R. F. Pentode	A.F. Amplifier	Resistance coupled to output Valve V.8.A.
	V.8.A.	6V6G	Output Pentode	A.F. Output	Coupled by Transformer T.5.A. to B-Set Telephone Wiring.

(Table continued on next page)

TABLE IV—Concluded

VALVE DESIGNATIONS, TYPES, FUNCTIONS AND CIRCUIT DETAILS—Concluded

	Valve	Designation	Type	Function	Circuit and Intervalve Coupling Details
"B" SET SENDER	V.7.A.	E 1148 CV6	Low Capacity Triode	Oscillator	Coupled to Aerial by tapped Coil L.11.A. and Resonant Feeder No. 2 and No. 3.
	V.1.E.	6K7G	R. F. Pentode	Modulator Preamplifier	Resistance coupled to Modulator V.8.A.
	V.8.A.	6V6G	Output Pentode	Modulator	Coupled by Transformer T.5.A. to Anode Circuit of V.7.A.
I-C AMPLIFIER	V.1.F.	6K7G	R. F. Pentode	Preamplifier	Resistance coupled to Output Valve V.8.B.
	V.8.B.	6V6G	Output Pentode	A. F. Output	Coupled by Transformer T.6.A. to 1-C Telephone Line.

TABLE V
CONTROLS AND ADJUSTMENTS

Designation of Control	Coding on Circuit	Location	Function and Operation
"A Frequency Mc/s"	C.9.A., C.9.B., C.9.C., C.9.D.	Set Panel	The Master Frequency Control of the Set Tunes Sender and Receiver simultaneously. Operates a 4-Gang Variable Condenser which tunes all the R.F. Tuned Circuits in the set except the Aerial and P.A. Anode Circuits. Fitted with "Flick" Mechanism. See below.
"A P. A. Tuning"	C.3.A.	Set Panel	Operates the Single Variable Condenser which tunes the Anode Circuit of V.4.A. and the Grid Circuit of V.1.A. simultaneously. Fitted with "Flick" Mechanism. See below.
"4½-8 Mc/s 2-4½"	S.11.A.	Set Panel	12-Pole, 2 Position Switch connecting one set of Coils, while short circuiting the other (according to the Band.)
"Gain A"	R.13.A.	Set Panel	Operates a 1 Megohm Potentiometer controlling the A.F. Gain of the "A" set only.

(Table continued on next page)

TABLE V—Continued
CONTROLS AND ADJUSTMENTS—Continued

Designation of Control	Coding on Circuit	Location	Function and Operation
"MCW, CW, R/T"	S.7.A.	Set Panel	Transmission Selector Switch operates a 9-Pole 3-Position Switch and enables the set to be used for Transmission and Reception of Radio-Telephone (R/T) Continuous Wave (C.W.) and Modulator Continuous Wave (M.C.W.) in the M.C.W. Position Modulation only is keyed
"Het-Tone"	R.14.A	Set Panel	Adjusts the Heterodyne Tone in C.W. reception between a 700 c/s and about 1,800 cycles/second.
"Net"	S.3.B.	Set Panel	Push Bottom Switch operating 465 KC. Heterodyne Oscillator to beat against signal produced in I.F. Circuit by incoming carrier. When the Received Signal is tuned to Zero Beat this gives correct netting and ensures that the "A" Set will transmit on the same frequency as that of the incoming signal.
"Off-On" B	S.9.A.	Set Panel	Two-Position Toggle Switch enabling the B-Set to be switched off while leaving the remainder of the set operating.
"A Only"	S.10.A.	Set Panel	Two-Position Switch giving the "A" Set only, as an alternative to the "All" Position in which all services are available.

(Table continued on next page)

TABLE V—Continued
CONTROLS AND ADJUSTMENTS—Continued

Designation of Control	Coding on Circuit	Location	Function and Operation
"AE, AVC, LT, H.T.1 H.T.2 Drive."	S.8.A.	Set Panel	Six-Position Switch enabling the Test Meter to be used for the following purposes: A.E. Measurement of Aerial Current in conjunction with Transformer and Rectifier on Variometer Assembly. A.V.C. indicates correct tuning of Receiver by a dip in the meter when tuned to Incoming Signal. L.T. checks L.T. voltage applied to Valve Heaters, Relays, etc. H.T.1 measures 275 V. H.T. Supply Voltage. H.T.2 measures 500 V. H.T. Supply Voltage. Drive Checks correct operation of Signal Frequency Circuits in Sender Prior to V.4.A.
"TUNING B"	C.25.A.	Set Panel	Adjusts Split Stator Variable Condenser and varies the frequency of B Set between 230 and 240 Mc/s approximately. Not calibrated in frequency but divided into ten divisions enabling resetting to be readily carried out.

(Table continued on next page)

TABLE V—Continued
CONTROLS AND ADJUSTMENTS—Continued

Designation of Control	Coding on Circuit	Location	Functions and Operations
"Gain B"	R.35.A.	Set Panel	Operates A 0.1 Megohm Potentiometer controlling the A.F. Gain only of B-Set.
"Quench"	L.14.A.	Set Panel	Permeability Tuned Adjustment of Quench Frequency of "B-Set" Receiver enabling this frequency to be adjusted to avoid interference between sets in a net due to beating of Quench Frequencies or their Harmonics.
"Off/On"	S.6.A.	Supply Unlt Panel	Connecting the Battery Voltage to the Motor Generator and the Valve Heaters.
"A, I-C., B"	S.1.A.	Control Unit No. 1 MK. I or No. 1 MK. II	Three-Position Switch enabling the Tank Commander to speak or listen on "A"-Set, I-C. or "B" Set. In the I.C. position Side-Tone may be heard from "A" and "B" Sets when the "Gain "A" and "Gain B" are fully clockwise. S10A and S9A have to be in the down position.

(Table continued on next page)

TABLE V—Continued
CONTROLS AND ADJUSTMENTS—Continued

Designation of Control	Coding on Circuit	Location	Functions and Operations
"A, I-C, B"	S.1.B.	Control Unit No. 2 MK. I	Three-Position Switch enabling the Loader-Operator to speak or listen on "A" Set, I.C. Amplifier or "B" Set. (See note at end of table.)
"A, I-C, B"	S.1.C.	Control Unit No. 3 and Control Unit No. 3A (Double Box)	Three-Position Switch permitting Commander to select facility over which he desires to talk and listen.
"A, I-C, B"	S.1.D.	"	Provides facilities as above for operator. (See note at end of table.)
"A, I-C, B"	S.1.C.	Control Unit No. 3B (Usually fitted in B-Vehicles).	Three-Position Switch permitting two operators to be simultaneously switched either to "A" Set, "B" Set or intercommunication.
"A, I-C, B"	S.1.D.	"	Three-Position Switch permitting third operator to select what facility he desires. (See note at end of table.)
"A, I-C, B"	S.1.D.	Control Unit No. 3C (Remote Control Box for Vehicles where Commander is in Turret and Wireless Sets in Hull.)	Three-Position Selector Switch permitting operator at set to connect a remote line going to Commander's Junction Box to any facility of Set A, I-C or B. It provides R/T only for remote line.

(Table continued on next page)

TABLE V—Concluded
CONTROLS AND ADJUSTMENTS—Concluded

Designation of Control	Coding on Circuit	Location	Function and Operation
"A, I-C, B"	S.1.D.	Control Unit No. 3C	Three-Position Selector Switch permitting operator at set to select A, I-C or B Set facilities for himself. (See note at end of table.)
"A, I-C, B"	S.1.F.	Control Unit No. 3A, MK. II	Three-Position Switch enabling the Commander to speak and listen on "A" Set, I.C. Amplifier and "B" Set.
"N.R."	S.14.A.	Control Unit No. 2, MK. II No. 3A, MK. II	Two-Position Switch providing normal or re-broadcast facilities.
"B-A, A & B, A-B" "A, I-C, B"	S.13.A.	Control Unit No. 2, MK. II No. 3A, MK. II	Three-Position Switch providing, in conjunction with S14A, normal or re-broadcast facilities.
Call Commander	S.3.A.	Junction Distribution No. 1 and No. 3	Push-Button Switch enables the driver to call the Commander when the latter is operating either set. Pressing the switch produces a loud buzz in the Commander's Telephone.

NOTE: On Control Units Nos. 3, 3A, 3B, 3C a red light will come on if the "A" Set is left unattended by simultaneous operation of S.I.C. and S.I.D. to "B" Position.

CHAPTER II

OPERATING INSTRUCTIONS

(Photo 1, Fig. 1-7)

TABLE V

2.1 PRELIMINARY

A. Roll up waterproof covers and secure same on top of the set.

B. See that set, variometer, aerials, batteries, control units, headgear, etc., are properly connected according to the installation instructions supplied with every vehicle.

C. Put "OFF-ON B" (S9A) to "OFF." (If it is at "ON" you risk blowing valve V7A.)

D. Switch on power-supply "ON-OFF" switch, S6A on panel of Supply Unit.

E. Check H.T. and L.T. voltages by means of the Test Meter, operating the meter switch S8A (Table VIII gives the limits within which the meter readings should be). The valve heaters take about thirty seconds to warm up, and this interval should be permitted before sender or receiver are operated.

F. Switch S9A (OFF-ON B) to "ON B" and make sure that S10A (A ONLY-ALL) is on "ALL."

G. When the valves have warmed up, check that intercommunication between all members of the crew is satisfactory with the Control Units set to "I.C." Note that when both switches are set to "B" the warming lamp on the Control Unit will light up, indicating that A-Set is unattended.

H. Turn switch on Control Unit to "A." Turn "Gain A" (R13A) fully clockwise. Set dials of "Frequency Mc/s" (Ganged condensers C9A, B, C and D) and "P.A. Tuning" (C3A) to the same frequency. Rotate Variometer, and the signal or noise strength will indicate that receiver and aerial circuits are working properly.

I. Press Pressel-Switch on microphone, turn meter switch (S8A) to "AE" and note that a reading is obtained, show-

ing that the sender is operating. (See page . . . for tuning procedure.)

K. Turn switch on Control Unit to "B." Turn "GAIN B" clockwise as required. A rushing (quench noise) indicates that "B" set receiver is operating. This noise will disappear when the pressel-switch is pressed, indicating that the "B" set has been switched to "SEND."

WARNING: Utmost care should be taken when pressing the pressel-switch either on the "A" or the "B" set, as this puts the transmitter "on the air" and enables the enemy to obtain a D.F. bearing.

2.2 TUNING OF "A" SET

Under normal circumstances, several stations will work in a "GROUP" or "NET." Such a group consists of a number of sets tuned to the same frequency. One station, usually the set of the highest formation, is called the "Control-Station," the others are "Out-Stations." It is of utmost importance that all sets belonging to the same group are accurately tuned to the same frequency: the frequency of the control station.

Normally, a group will be given two frequencies to work on, the "blue" or normal and the "red" or spare frequency. The "Flick" mechanism permits tuning the set for working on either frequency, and to change quickly from one to the other.

By tuning and netting the receiver to the control station, the sender is automatically tuned to the same frequency.

To tune sender or receiver, proceed as follows:

2.2.1 TUNING AND NETTING OF RECEIVER

A. Turn "Flick" controls to "Tune."

B. Set Band-change switch S11A to the required frequency band.

C. Set both tuning dials to the frequency of the control station.

D. Rotate aerial variometer T1A until maximum signal strength or noise is heard in headgear. This is a check

that the aerial circuits are approximately in tune. If Transmission Selector Switch S7A is set to R/T and control station is strong, a sharp dip in reading of Meter (Switch S8A set to A.V.C.) will indicate that the set is tuned correctly.

E. Re-adjust "Frequency Mc" and "P.A. Tuning" dials until control station is heard clearly.

F. Press "NET" button and adjust "Frequency Mc" dial until the beat note frequency is zero. When netting on "M.C.W.," or while the other station is talking, the beat note will disappear, but the modulation can still be heard.

G. For C. W. reception, turn switch S7A to "C.W." and adjust beat note as desired by means of "HET TONE" control R14A.

2.2.2 TUNING OF SENDER

A. Turn the transmission selector switch S7A to the required position (R/T, C.W., or M.C.W.).

B. Set Test Meter Switch S8A to "AE."

C. R/T: When working on R/T, press the pressel-switch of the microphone and adjust Variometer and "P.A. Tuning" knob until meter indicates maximum output. It is necessary to re-adjust both controls successively several times before maximum meter reading is obtained. Log Variometer setting.

D. C.W.: When working on C.W. or M.C.W., plug morse key and plug assembly No. 9 into the "KEY" jack on the set panel. If no suitable platform is found on which to rest the key, it may be strapped to the thigh.

When sending it is necessary for the plug to be pushed right home. The procedure to tune for maximum output is the same as for R/T. When working on C.W., however, it is necessary to press the key when tuning for maximum output. (If the key is not pressed, no aerial current will flow.) When receiving, the plug should be partially withdrawn. (If the key remains pushed in the set stays on "Send" and no reception is possible.) Pushing the plug in, switches the Set

to "Send" again. If the output circuits have been tuned for maximum output on R/T and the set is switched to C.W., and vice versa, it is necessary to retune them slightly, following the same procedure as before.

The Variometer needs re-adjusting whenever the frequency of the set or the length of the aerial is altered. When you set up for "Flick" working, note the Variometer settings for the two frequencies on the writing tablet at the right-hand end of the set, and in your log, so that you can re-set the Variometer quickly when changing frequency. There are two scales on the Variometer 0-100 and 200-100. The lower frequencies will have a setting on the lower scale (0-100), the lowest frequency near 10; high frequencies will have a setting on the higher scale (200-100), the highest near 110.

WARNING. The positions where you change from one scale to another are marked by red bands. Never use a setting covered by either of these bands. If you find a setting on or a little below either red band, say between 80 and 100 or between 180 and 200, always see if you can get better results at the top of the other range.

2.2.3 THE "FLICK" DIALS (Fig. 7a)

The "Flick" mechanisms fitted to the two main dials ("Frequency Mc" and "P.A. Tuning") enable the adjustments of these controls to be pre-set for two frequencies. An almost instantaneous change from one frequency to another is thus made possible.

Adjacent to each main tuning dial is an auxiliary control marked "FLICK," "SET," and "TUNE." In the "FLICK" position, two pre-determined tuning settings are indicated by spring-loaded followers, which drop into notches in two discs mounted on the condenser shaft. The coloured indicators above the dials indicate which of the two discs is engaged.

In the "FLICK" position, the slow motion drive is disengaged. With the "Flick" controls set to "TUNE," the "Flick" mechanism is disengaged and the slow motion drive functions in the normal manner.

To operate the 'FLICK DIALS" proceed as follows:

1. Set Band-change switch (S11A) to desired Band.
2. Engage either the blue or the red disc of each dial.
3. Turn the auxiliary controls to "SET."
4. Slacken off the appropriate (blue or red) locking screws on the front of the dial knobs.
5. Tune the receiver, by operating both dials, to the control station (paragraph 2.2.1).
6. Tighten locking screws of "FREQUENCY Mcs" dial only.
7. Press the pressel-switch and rotate the Variometer dial for maximum aerial current. Log Variometer setting.
8. Re-adjust the "P.A. Tuning" dial for maximum aerial current and tighten locking screws.
9. Engage the other disc of each dial and repeat the entire process for the other frequency.

It is possible to fix both "flick" positions on the same band, or to have them on different bands. When setting the "Frequency Mc/s" control, care should be taken to read the correct dial. (According to the setting of the Band Change Switch.)

When changing from one "flick" position to another, the following procedure should be adopted:

1. "Flick" "Frequency Mc" Control.
2. "Flick" "P.A." Tuning Control.
3. Change Band Change Switch, when the new "flick" position is on another band.
4. Rotate Variometer until maximum output is indicated by the test meter. This setting will be greatly facilitated if the Variometer position has been logged previously.

WARNING: When netting, do not tighten any locking screws, before all controls are adjusted for zero beat on Receive and maximum aerial current on Send.

NOTE: After having netted and tuned, the meter switch S8A should be left in the "AE" position. The meter will then always show a reading when the set is switched to Send, thus giving the operator a possibility to check the operation.

2.3 TUNING AND NETTING THE "B" SET

(1) Put the "A ONLY-ALL" switch to "ALL" (if it is not already there).

(2) Put the "OFF-ON B" switch to "ON" (if not already done).

(3) Turn the switch on the control unit to "B."

(4) Turn the knob "GAIN B" to the right as far as it will go.

(5) Put the "B TUNING" disc to the ordered setting.

NETTING.

(6) Control Station presses his pressel-switch and calls the group.

(7) During this call, out-stations adjust their "B TUNING" discs till they hear control, turn the knob "GAIN B" down till control can only just be heard, and adjust the tuning discs for the clearest possible signal. They may then turn "GAIN B" up, if necessary, to hear control comfortably.

(8) Out-stations answer in turn. During each answer, control tunes his "B" set to the out-station's signal as in (7), and notes the setting of his tuning disc. If this is more than one division different from the ordered frequency, the out-station is badly off net.

(9) Control station calls all out-stations one by one and tells them "O.K. off," if they have netted properly. If a station is badly off the net, he tells him to alter the setting of his tuning discs up or down, according to the notes made in (8) above, and to answer him again.

The "QUENCH" Adjuster. This should NEVER be touched except on orders from CONTROL.

(10) Sometimes a whistle interferes with the working of the group. If this happens, Control orders all out-stations to screw their quench adjusters right IN, and does so himself. He then orders all out-stations but one to switch their "B" sets off; call this one station "No. 1." If there is still a whistle, Control orders No. 1 to screw his adjuster slowly out again, and both listen. When the whistle pitch is too high to be heard, No. 1 stops screwing, and tells Control "O.K."

(11) Control tells another out-station (call him No. 2), by shouting or other means, to switch his "B" set on. If there is a whistle, No. 2 screws his adjuster slowly out. When he can no longer hear the whistle, he stops screwing and tells Control "O.K."

(12) The same drill is done again for the rest of the out-stations. It should never be necessary to touch the "QUENCH" adjusters again until a new set joins the group.

2.4 CONTROL AND INTERCOMMUNICATION SYSTEM

The installation of the Control and Intercommunication System depends on the type of vehicle in use. The installation instructions and circuit diagrams are supplied with every Installation Kit and Vehicle.

To operate the intercommunication system, it is only necessary to turn the switch on the control unit to I-C, and to press the pressel-switch when talking. Make sure that S10A is on position "ALL."

Tables VI and VII show the facilities provided by installations in a Canadian Infantry Tank Mk. III and an U. S. Medium Tank M4. Figs. 8 and 9 show the wiring layout of these installations.

In the Infantry Tank, the Gunner's and Commander's headgears are connected to Control Unit No. 3 (Mk. I or Mk. II), and by means of a switch they select the facility they require. The Mark I unit has 2 switches only, S1C and S1D, by which the type of service is selected.

Control Unit No. 3, Mk. II has 3 switches, S1F, S13A and S14A. With S14A in position "N" (Normal), the facilities and operations are the same as on a Mk. I Unit.

With S14A in position "R" (Re-Broadcast) the facilities as outlined on Table VI are available. The operation of the control and intercommunication system in an U. S. Medium Tank M4 is very similar. Fig. 9 and Table VII show all the details.

2.5 CHECKING FOR CORRECT OPERATION

The following points should be checked when installing the set or after it has been out of operation for a long period:

1. Check that the operating voltages are correct, using the Test meter on the set panel. (See Table VIII for limits).
2. Check that the I-C, Amplifier works satisfactorily. (Switches on Control Units to I-C.)
3. Check that the side-tone of "A" and "B" sets can be heard when sending. (Switches on Control Units to "A" and "B" respectively.)
4. Check that the incoming signals on "A" and "B" Sets can be heard with the Control Unit switches set to "I.C."
5. Check that the lamp on Control Unit lights, when the A-Set is unattended. (Switches on Control Units to "B.")
6. Check that the aerial current and drive voltage are correct, using the Test meter on the panel. (See Table VIII for limits.)

WARNING: Testing the side-tone of the "A" or "B" Set in the field should be deleted, as this gives the enemy a chance to obtain a D.F. bearing on the vehicle.

TABLE VI
DETAILS OF CONTROL SYSTEM (CANADIAN INFANTRY TANK MK. III) (3-MAN VEHICLE)

Control Unit No. 3 MK. II (Commander, Gunner)			Speaking and Listening on A-Set	Speaking and Listening on B-Set	Connected to Inter-communication System	Receiver Output Fed Into I-C to Provide Calling Signal	Remarks
Switch S14A in Position	Switch S13A in Position (Gunner)	Switch S1F in Position (Commander)					
N	A	I.C.	Gunner	—	Commander, Driver	B-Set	With switches set to "I-C," the side-tone provided by "A" and/or "B" sets serves as a monitor on incoming signals.
N	B	I.C.	—	Gunner	Commander, Driver	A-Set	
N	I.C.	I.C.	—	—	All	A-Set and B-Set	—
N	A	A	*Commander Gunner	—	Driver	B-Set	Commander and Gunner should never communicate over side-tone of A-Set. This speech is radiated and subject to enemy interception or D.F.

* Driver can call Commander in case of emergency by means of buzzer signal operated by push-button on Junction Distribution No. 3.

(Table continued on next page)

TABLE VI—Continued

DETAILS OF CONTROL SYSTEM (CANADIAN INFANTRY TANK MK. III) (3-MAN VEHICLE)—Continued

Control Unit No. 3 MK. II (Commander, Gunner)			Speaking and Listening on A-Set	Speaking and Listening on B-Set	Connected to Inter-communication System	Receiver Output Fed Into I-C to Provide Calling Signal	Remarks
Switch S14A in Position	Switch S13A in Position (Gunner)	Switch S1F in Position (Commander)					
N	B	A	*Commander	Gunner	Driver	—	—
N	I.C.	A	*Commander	—	Driver Gunner	B-Set	—
N	A	B	Gunner	*Commander	Driver	—	—
N	B	B	—	Gunner, *Commander	Driver	A-Set	—
N	I.C.	B	—	*Commander	Driver	"A" Set	Warning Lamp on control unit No. 3 indicates "A" Set unattended. Commander and Gunner should never communicate over side-tone of B-Set. This speech is radiated and subject to enemy interception or D.F.

* Driver can call Commander in case of emergency by means of buzzer signal operated by push-button on Junction Distribution No. 3.

(Table continued on next page)

TABLE VI—Concluded

DETAILS OF CONTROL SYSTEM (CANADIAN INFANTRY TANK MK. III) (3-MAN VEHICLE)—Concluded

Switch S14A in Position	Switch S13A in Position (Gunner)	Facilities	Switch S1F in Position (Comm.)	Facilities	Remarks
R	B-A	Output from B modulating A which is automatically switched to send.	A	Hears A side-tone (R/B side tone) and can add his speech to the R/B.	
		Gunner can hear A side-tone.	I.C.	Can converse with driver on I.C.	
		Gunner's mic. out of circuit.	B	Hears B Tel. (incoming signal) and can send on B, his conversation being R/B.	
R	A & B	A. & B. in parallel. Send or Receive on A. & B. simultaneously.	A	Send or Receive on A. & B. simultaneously.	
			B	Send or Receive on A. & B. simultaneously.	
			I.C.	Can converse with driver on I.C.	
R	A-B	Output from A modulating B which is automatically switched to send.	B	Hears B side-tone (R/B side-tone) and can add his speech to the R/B.	
		Gunner can hear B side-tone.	I.C.	Can converse with driver on I.C.	
		Gunner's mic. out of circuit.	A	Hears A Tel. (incoming signal) and can send on A, his conversation being R/B.	

NOTE: If a Control Unit No. 3A is used instead of Control Unit No. 3, a third cord will be found on the 3A Unit. This cord is connected to the Intercommunication System only, and cannot be used to speak over the "A" or "B" sets.

TABLE VII
DETAILS OF CONTROL SYSTEM (U. S. MEDIUM TANK M4) (5-MAN VEHICLE)

Control Unit No. 2 Mk. II (Loader-Operator)		Control Unit No. 1 Mk. II (Commander)	Speaking and Listening on A-Set	Speaking and Listening on B-Set	Connected to Inter-communication System	Receiver Output Fed Into I-C to Provide Calling Signal	Remarks
Switch S14A in Position	Switch S13A in Position	Switch S1F in Position					
N	I.C.	A	*Commander	—	Loader-Operator, Gunner, Driver, Fwd-Gunner	B-Set	With switches set to "I-C," the side-tone provided by "A" and/or "B" serves as a monitor on incoming signals.
N	I.C.	I.C.	—	—	All	A-Set and B-Set	
N	I.C.	B	—	*Commander	Loader-Operator, Gunner, Driver, Fwd-Gunner	A-Set	
N	A	A	*Commander & Loader-Operator	—	Gunner, Driver, Fwd-Gunner	B-Set	Commander and Loader - Operator should never communicate over side-tone of "A" set, as this speech is radiated and subject to enemy interception or D.F.
N	A	I.C.	Loader-Operator	—	Commander, Gunner, Driver, Fwd-Gunner	B-Set	

* Driver can call Commander in case of emergency by means of buzzer signal operated by push-button on Junction Distribution No. 3.

(Table continued on next page)

TABLE VII—Continued

DETAILS OF CONTROL SYSTEM (U. S. MEDIUM TANK M4) (5-MAN VEHICLE)—Continued

Control Unit No. 2 Mk. II (Loader-Operator)		Control Unit No. 1 Mk. II (Commander)	Speaking and Listening on A-Set	Speaking and Listening on B-Set	Connected to Inter-communication System	Receiver Output Fed Into I-C to Provide Calling Signal	Remarks
Switch S14A in Position	Switch S13A in Position	Switch S1F in Position					
N	A	B	Loader-Operator	*Commander	Gunner, Driver, Fwd-Gunner	—	
N	B	A	*Commander	Loader-Operator	Gunner, Driver, Fwd-Gunner	—	
N	B	I.C.	—	Loader-Operator	Commander, Gunner, Driver, Fwd-Gunner	A-Set	
N	B	B	—	*Commander and Loader-Operator	Gunner, Driver, Fwd-Gunner	"A" Set	Warning lamp control unit No. 2 indicates "A"-Set unattended." Commander and Loader - Operator should never communicate over side-tone of B-Set. This speech is radiated and is subject to enemy interception or D.F.

* Driver can call Commander in case of emergency by means of buzzer signal operated by push-button on Junction Distribution No. 3.

(Table continued on next page)

TABLE VII—Concluded

DETAILS OF CONTROL SYSTEM (U. S. MEDIUM TANK M4) (5-MAN VEHICLE)—Concluded

CONTROL UNIT NO. 2 MK. II (Loader-Operator)			CONTROL UNIT NO. 1 MK. II (Commander)		Remarks
Switch S14A in Position	Switch S13A in Position	Facilities	Switch S1F in Position	Facilities	
R	B-A	Output from "B" modulating "A" which is automatically switched to send. Operator can hear "A" side-tone. Operator's Mic. out of circuit.	A	Hears "A" side-tone (R/B side-tone) and can add his speech to the R/B.	
			I.C.	Can converse with crew on I.C. (Except Operator).	
			B	Hears "B" Tel. (incoming signal) and can send on "B," his conversation being R/B.	
R	A & B	"A" and "B" in parallel. Send or Receive on "A" and "B" simultaneously.	A	Send or Receive on A & B simultaneously.	
			B	Send or Receive on A & B simultaneously.	
			I.C.	Can converse with crew on I.C. (Except Operator).	
R	A-B	Output from "A" modulating "B" which is automatically switched to send. Operator can hear "B" side-tone. Operator's Mic. out of circuit.	B	Hears "B" side-tone (R/B side-tone) and can add his speech to the R/B.	
			I.C.	Can converse with crew on I.C. (Except Operator).	
			A	Hears "A" Tel. (incoming signal) and can send on A, his conversation being R/B.	

TABLE VIII
NORMAL METER READINGS

Position of Switch S.8.A.	Meter Function	Normal Readings					Remarks
A E	Indicates Aerial Current	8.0 4.0	6.0 6.0	4.5 8.0	3.5 5.5	2.5 Mc/s 3.0 V	Measured on R/T operation using 0-15 V scale. These readings are extremely variable and no limits can be given. The given readings are merely typical of normal operations.
A V C	Indicates Receiver Tuning	Input 0 7.5	 100 6.0	 1000 5.0	 10000 4.0	 100,000 Micro-Volts 3.0 V Reading	
L. T.	Indicates L.T. Voltage Applied to Filaments	10.5 V to 15.0 V					L.T. voltage should be within these limits to assure operation. Voltages below 12 V will reduce output and performance.
H.T.1.	Indicates 275 V Supply	215 V to 315 V					These readings should be obtained when the L.T. voltage at the Sender/Receiver Terminals (PL 1 B) is 12 volts.
H.T.2.	Indicates 500 V Supply	440 V to 500 V					
Drive	Indicates Drive Voltage	4.5 V to 7.0 V					

NOTE: Test Meter is correct if it indicates 11.4 V to 12.6 V (S.8A in L.T. position) when the L.T. voltage is 12 volts at the Sender/Receiver Terminals.

(Table continued on next page)

TABLE IX
COMPONENTS AND PARTS FOR WIRELESS SET NO. 19, MARK II

Circuit Ref.	Location	Pye Part No. P.C.	N.E. Part No. P.C.	Type No.	Value	Tol.	Rating	Used On
Resistors:								
R 1A	Screen V1E	70722	70722C	K5988-33C	470000	20%	¼ W	S/R (B)
B	Load V3A	"	"	"	"	"	"	" (A)
C	Load V6A	"	"	"	"	"	"	" (A)
D	Filter V6A	"	"	"	"	"	"	" (A)
E	Grid V5A	"	"	"	"	"	"	" (A)
F	Screen V1F	"	"	"	"	"	"	" (1-C)
R 2A	Cath. V1A	70732	70732C	K5975-12B	220	10%	½ W	S/R (A)
B	Cath. V2B	"	"	"	"	"	"	" (A)
C	Sec. T5A	"	"	"	"	"	"	" (B)
D	Pri. T4B	"	"	"	"	"	"	" (1-C)
E	Sec. T6A	"	"	"	"	"	"	" (1-C)
F	HF Osc. V2A	"	"	"	"	"	"	" (A)
R 3A	Cath. V2A	70730	70730C	K5974-111B	270	10%	½ W	S/R (A)
B	Cath. V1C	"	"	"	"	"	"	" (A)
*R 4A	Screen V2A	70721	70721C	K5974-57B	47000 use 2 in par.	10%	1 W	S/R (A)
* D	Screen V2B	"	"	"		"	"	" (A)
R 5A	P. Filt. V1A	70726	70726C	K5988-89B	2200	10%	¼ W	S/R (A)
B	P. Filt. V2A	"	"	"	"	"	"	" (A)
C	P. Filt. V1C	"	"	"	"	"	"	" (A)
D	P. Filt. V5A	"	"	"	"	"	"	" (A)
E	P. Filt. V2B	"	"	"	"	"	"	" (A)
R 6B	Grid V2A	70729	70729C	K5988-57B	47000	10%	¼ W	S/R (A)
D	Grid V2B	"	"	"	"	"	"	" (A)
F	Grid V3A	"	"	"	"	"	"	" (A)
G	Grid V1D	"	"	"	"	"	"	" (B)
H	Filt. V7A-V1E	"	"	"	"	"	"	" (B)

1. Items marked (*) have rating changed from English specification.
2. In U. S. sets a single 1 watt 22,000 ohm resistor is used instead of the two ½ watt 47,000 ohm resistors in parallel (R4A and R4D).
3. Unless otherwise indicated read tolerances (±).

(Table continued on next page)

TABLE IX—Continued
COMPONENTS AND PARTS FOR WIRELESS SET NO. 19, MARK II—Continued

Circuit Ref.	Location	Pye Part No. P.C.	N.E. Part No. P.C.	Type No.	Value	Tol.	Rating	Used On
Resistors:								
R 7A	Damp. Res. 1st I.F.	70743	70743C	K5988-49C	100000	20%	¼ W	S/R (A)
B	Damp. Res. 2nd I.F.	"	"	"	"	"	"	" (A)
C	Filt. 3rd I.F.	"	"	"	"	"	"	" (A)
D	Grid. V4A	"	"	"	"	"	"	" (A)
G	Grid V4A	"	"	"	"	"	"	" (A)
H	Sec. T4A	"	"	"	"	"	"	" (B)
* J	Plate V1E	"	"	K5974-49C	"	"	½ W	" (B)
R7.1J	Screen V1A	"	"	"	"	"	"	S/R (A)
* K	Plate V1F	"	"	"	"	"	"	" (1-C)
L	Divider V2A	"	"	K-5988-49C	"	"	¼ W	" (A)
B	AVC Load V3A	70723	70723C	K5988-25C	1 Meg.	20%	¼ W	S/R (A)
R 8A	AVC Filt. V3A	"	"	"	"	"	"	" (A)
D	Grid V8A	"	"	"	"	"	"	" (B)
F	Grid V8B	"	"	"	"	"	"	" (B)
R 9A	Cath. V1B	72988	72988C	K5988-97B	1000	10%	¼ W	S/R (A)
B	Cath. V1E	"	"	"	"	"	"	" (B)
C	Cath. V1F	"	"	"	"	"	"	" (1-C)
* D	Cath. V8A	"	"	K5974-97B	"	"	½ W	" (B)
E	Cath. V3A	"	"	K5988-97B	"	"	¼ W	" (A)
R10A	Damp. Res. Variom	70735	70735C	Sheet 2	470	10%	½ W	Var. (A)
C	Meter Shunt	"	"	K5974-105B	"	"	"	S/R (A)
*R11A	Cath. V3A	70713	70713C	K5974-85B	3300	10%	½ W	S/R (A)
B	Plate V1D	"	"	K5988-85B	"	10%	¼ W	" (B)
*R12A	Screen V3A	70717	70717C	K5974-53B	68000	10%	½ W	" (A)
R13A	Vol. Cont. 'A'	81256	81256C	Variable	1 Meg.			" (A)
R14A	Het. Cont. R	81258	81258C	"	6.0			" (A)
R15A	Divider V4A	70744	70744C	K5988-41C	220000	20%	¼ W	" (A)
B	Divider V4A	"	"	"	"	20%	¼ W	" (A)

1. Items marked (*) have rating changed from English specification.
2. In U. S. sets R7A and R7B are deleted.
3. On some Canadian sets R9E is R10A, i.e., the value is 470 ohms instead of 1000 ohms.
4. On some Canadian, and all U. S. sets R10A is R27A, i.e., the value is 330 ohms instead of 470 ohms.
5. For U. S. meter substitute R37H for R10C. In U. S. sets this is a ½ watt resistor. It may be replaced by the 1 watt resistor R37H.
6. Unless otherwise indicated read tolerances (±).

(Table continued on next page)

TABLE IX—Continued
COMPONENTS AND PARTS FOR WIRELESS SET NO. 19, MARK II—Continued

Circuit Ref.	Location	Pye Part No. P.C.	N.E. Part No. P.C.	Type No.	Value Tol.		Rating	Used On
Resistors:								
R16A	Res. in L5A	89038	89038C	K5975-59A	½ Ohms	5%	½ W	" (A)
R17A	Screen V5A	70734	70734C	K5988-83B	3900	10%	¼ W	S/R (A)
*R18A	Cath. V6A to S7	70727	70727C	K5974-39B	270000	10%	½ W	S/R (A)
* B	Cath. V4A to HT 1	"	"	"	"	"	"	" (A)
C	Grid V7A	"	"	K5988-39B	"	"	¼ W	" (B)
R19A	Cath. V4A	70728	70728C	K5988-51B	82000	10%	¼ W	S/R (A)
* B	Screen V1C	"	"	K5974-51B	"	"	½ W	S/R (A)
R20A	Screen V4A	72657	72657C	K5975-20B	100	10%	½ W	S/R (A)
B	Cath. V5A	"	"	"	"	"	"	" (A)
R21A	Filt. V3A	70724	70724C	K5988-63B	27000	10%	¼ W	S/R (A)
B	Feedback 1 C	"	"	"	"	"	"	" (1-C)
C	Meter Res.	"	"	"	"	"	"	" (A)
R22A	Plate V4A	70733	70733C	Ceramic	47	10%	½ W	S/R (A)
R23B	Ser. Grid V1E	70725	70725C	K5988-65B	22000	10%	¼ W	S/R (B)
C	Pl. Filt. V1E	"	"	"	"	"	"	" (B)
D	Ser. Grid V1F	"	"	"	"	"	"	" (1-C)
E	Pl. Filt. V1F	"	"	"	"	"	"	" (1-C)
R24A	Meter Ser. Res.	71901	71901C	K5974-23A	1.2 Meg	5%	½ W	S/R (A)
R25A	Meter Ser. Res.	90459	90459C	K5976-23A	1.2 Meg.	"	1.0 W	S/R (A)
R26A	Meter Ser. Res.	72389	72389C		29000	2%	¼ W	S/R (A)
R27A	Damp. Res. Vario.				330	10%	¼ W	Var. (A)
R28A	Damp. Res. in Vario.	70740	70740C	Ceramic	27	10%	½ W	Var. (A)
R29A	Cont. in Vario.	81264	81264C	Variable	20000			Var. (A)
R30A	Fil. V6A	90461	90461C	K5985-33A	30	5%	2.0 W	S/R (A)
R31A	Plate V1D	70741	70741C	K5974-89B	2200	10%	½ W	S/R (B)
R32A	Grid V7A	72658	72658C	K5988-69B	15000	10%	¼ W	S/R (B)
R33A	Plate V1D	90474	90474C	K5974-63B	27000	10%	½ W	S/R (B)

1. Items marked (*) have rating changed from English specification.
2. Unless otherwise indicated read tolerances (±).

(Table continued on next page)

TABLE IX—Continued
COMPONENTS AND PARTS FOR WIRELESS SET NO. 19, MARK II—Continued

Circuit Ref.	Location	Pye Part No. P.C.	N.E. Part No. P.C.	Type No.	Value	Tol.	Rating	Used On
Resistors:								
R33.1A	Plate V1D			K5974-57B	47000	10%	½ W	S/R (B)
*R34A	Screen V1D	70742	70742C	K5976-57B	47000	10%	1.0 W	S/R (B)
* B	Osc. Pl. V2A	"	"	"	"	"	"	" (A)
* C	Osc. Pl. V2B	"	"	"	"	"	"	" (A)
R35A	Vol. Cont. 'B'	81257	81257C	Variable	100000			S/R (B)
R36A	Feedback 'B'	70736	70736C	K5988-59B	39000	10%	¼ W	S/R (B)
R37A	Cath. V8A	70731	70731C	K5976-107B	390	10%	1.0 W	S/R (B)
R37H	Meter Shunt	"	"	"	390	10%	1.0 W	S/R (A)
R38A	Fil. V7A	89034	89034C	K5983-26A	56	5%	1.0 W	S/R (B)
*R39A	Cath. V8B	70714	70714C	K5974-99B	820	10%	½ W	S/R (1-C)
B	LF Osc. Grid V2A	"	"	K5988-99B	"	"	¼ W	S/R (A)
R40A	Lamp Res. P/s	90460	90460C	K5975-37B	20	10%	½ W	Supply U.
B	Lamp Res. Con. Unit 2	"	"	"	"	"	"	Control U.
C	Lamp Res. Con. Unit 3	"	"	"	"	"	"	Control U.
R41A	Mic. Res. J/B #1	90790	90790C		2	10%		Junction Dist.
B	Mic. Res. J/B #2	"	"		2	"		Junction Dist.
R42A	Grid V2A	72648	72648C	K5988-73B	10000	10%	¼ W	S/R (A)
B	Grid V4A	"	"	"	"	"	"	" (A)
C	Div. V2A V2B	"		"	"	"	"	" (A)
R43A	PA Bias	81265	81265C	Variable	100000			" (A)
*R44A	Screen V1A	70745	70745C	K5976-59B	39000	10%	1.0 W	" (A)
R45A	Screen V2A	72385	72385C	K5984-65B	22000	10%	2.0 W	" (A)
B	Screen V2B	"	"	"	"	"	"	" (A)

1. R33.1A is used with Canadian E1148 valves. If British valves are used, improved performance will be obtained if R33-1A is removed.
2. For U. S. meter substitute R37H for R10C. In U. S. sets this is a ½ watt resistor. It may be replaced by the 1 watt resistor R37H.
3. Items marked (*) have rating changed from English specification.
4. Unless otherwise indicated read tolerances (±).

(Table continued on next page)

TABLE IX—Continued
COMPONENTS AND PARTS FOR WIRELESS SET NO. 19, MARK II—Continued

Circuit Ref.	Location	Pye Part No. P.C.	N.E. Part No. P.C.	Type No.	Value Tol.	Rating	Used On
Condensers:							
C 1A	Coup. Ant. 'A'	66109	66109C	Mica	.004 Mfd. 15%	2200 V	S/R (A)
C 2A	Coup. V1A	66718	66095C	"	.0005 " 15%	1000 V	" (A)
B	Osc. Coup V2A	"	66718C	"	.0001 " 10%	"	" (A)
C	Grid V5A	"	"	"	" " 10%	"	" (A)
D	Grid V6A	"	"	"	" " 10%	"	" (A)
E	Grid V4A	"	"	"	" " 10%	"	" (A)
C 3A	PA Tuning	80179	80179C	Air	.000563		" (A)
C 4A	Screen V1A	68182	68182C	Paper	.1 15%	400 V	" (A)
B	Cath. V1A	"	"	"	" 15%	"	" (A)
C	Plate V1A	"	"	"	" 15%	"	" (A)
D	Screen V2A	"	"	"	" 15%	"	" (A)
E	Cath. V2A	"	"	"	" 15%	"	" (A)
F	Plate V2A	"	"	"	" 15%	"	" (A)
H	Cath. V1B	"	"	"	" 15%	"	" (A)
I	Plate V1B	"	"	"	" 15%	"	" (A)
K	Cath. V1C	"	"	"	" 15%	"	" (A)
L	Plate V1C	"	"	"	" 15%	"	" (A)
M	Screen V3A	"	"	"	" 15%	"	" (A)
N	Cath. V3A	"	"	"	" 15%	"	" (A)
O	Screen V1C	"	"	"	" 15%	"	" (A)
Q	Cath. V2B	"	"	"	" 15%	"	" (A)
R	Plate V5A	"	"	"	" 15%	"	" (A)
S	Cath. V5A	"	"	"	" 15%	"	" (A)
T	Plate V2B	"	"	"	" 15%	"	" (A)
U	Screen V2B	"	"	"	" 15%	"	" (A)
V	Screen V1D	"	"	"	" 15%	"	" (B)
W	Screen V1E	"	"	"	" 15%	"	" (B)
X	Screen V1F	"	"	"	" 15%	"	" (1-C)

1. British sets have .0001 Mfd. instead of C2A.

2. Unless otherwise indicated read tolerances (±).

(Table continued on next page)

TABLE IX—Continued
COMPONENTS AND PARTS FOR WIRELESS SET NO. 19, MARK II—Continued

Circuit Ref.	Location	Pye Part No. P.C.	N.E. Part No. P.C.	Type No.	Value Tol.	Rating	Used On
Condensers:							
AP	Filt. 'A' P/S	"	"	"	" 15%	"	P/S
BP	Filt. 'A' P/S	"	"	"	" 15%	"	"
CP	Filt. 275 V P/S	"	"	"	" 15%	"	"
C 5A	Grid V2A	66110	66110C	Mica	.01 10%	600 V	S/R (A)
B	Block Grid V5A	"	"	"	" 10%	"	" (A)
C	Block Grid V2B	"	"	"	" 10%	"	" (A)
*C 6A	Par. Pad H.F. Osc. V2A	66123	66123C	Compensator	.000050 Mfd. 5%	1300	" (A)
C 7A	Grid. Coup. V2A Triode	66717	66717C	Cer. (Mica)	.00003 " 10%	1000	" (A)
B	Grid. Coup. V2B Triode	"	"	" "	" " 10%	"	" (A)
*C 8A	Osc. Lag. (HF) V2A	66267	66267C	Mica	.0031 " 2%	600	" (A)
C 9D	Grid Tuning V5A	80180			Nominal 4-Gang Max. Var.	Pye Cond.	" (A)
C	Plate Tuning V5A						" (A)
A	Grid Tuning V2A (Pentode)	80181	80180C		.000530 Air Cond.	is comp. of 2-gang sections	" (A)
B	Osc. Tuning Plate V2A (Triode)				Mfd. per Section		" (A)
#C10A	RF Trimmer (HF) Grid V2A	80174	80174C	R15196-1	4/30 Mfd. Var. Cer.	Pye part is paired mount of compression	" (A)
#C35A	Osc. Trimmer (HF) Plate V2A			R15196-3	3/13 Mfd. Var. Cer.	Type Mica	" (A)
C38A	AVC V3A	68182	68182C	Paper	.1 Mfd. 15%	500 V	" (A)

1. Items marked (*) have rating changed from English specification.
2. Items marked (#) are not separately demandable.
3. Unless otherwise indicated read tolerances (±).

(Table continued on next page)

TABLE IX—Continued

COMPONENTS AND PARTS FOR WIRELESS SET NO. 19, MARK II—Continued

Circuit Ref.	Location	Pye Part No. P.C.	N.E. Part No. P.C.	Type No.	Value Tol.	Rating	Used On
Condensers:							
*C10C	Sender RF Trimmer (HF) Grid V5A	80168	80168C	R15196-1	4/30 Mnf.	Pye Part is Paired Mount of Compression Type Mica	S/R (A)
*C10B	Drive Trimmer (HF) Plate V5A	80168	80168C	R15196-1	4/30 Mmf. Var. Cer.	"	" (A)
D	RE Trimmer (LF) Grid V2A	80177	80177C-191	R15196-1	" " "	"	" (A)
* E	Sender R.F. Trimmer (LF) Grid V5A	"	80177C	R15196-1	" " "	"	" (A)
F	Drive Trimmer (LF) Plate V5A	"	"	"	" " "	"	" (A)
C10.1A	RF Pad (HF) Grid V2A		80174C-191	Mica	.00001 Mfd. 20%	1000	" (A)
C11A	Osc. Lag. (LF) Plate V2A	80128	See Note 3 Page 29	APC 140	6.5/140 Var. Mmf. Air.	Pye Part is a Mica Comp. Type	" (A)
C12A	Osc. Lag. (LF) V2A	66133	66133C	Mica	.00178 Mf. 2%	1000	" (A)
C13A	Pri. L8A (1st I.F.)	66060	66060C	Compensator Ceramic	.000014 Mf. 2%		" (A)
B	Sec. L8A (1st I.F.)	"	"	"	" 2%	"	" (A)
C	Pri. L8B (2nd I.F.)	"	"	"	" 2%	"	" (A)
D	Sec. L8B (2nd I.F.)	"	"	"	" 2%	"	" (A)

1. C11A and C35B are stocked in maintenance spares as one Assy. Per PC80128C-191 and the whole Assy. should be replaced when one part is defective.
2. Items marked (*) have rating changed from English specification.
3. Unless otherwise indicated read tolerances (±).

(Table continued on next page)

TABLE IX—Continued
COMPONENTS AND PARTS FOR WIRELESS SET NO. 19, MARK II—Continued

Circuit Ref.	Location	Pye Part No. P.C.	N.E. Part No. P.C.	Type No.	Value Tol.	Rating	Used On
Condensers:							
E	Pri. L9A (3rd I.F.)	"	"	"	" 2%	"	" (A)
F	Sec. L9A (3rd I.F.)	"	"	"	" 2%	"	" (A)
C14A	R.F. Filter Audio Diode V3A	66096	66096C	Mica	.0005 15%	1000	" (A)
B	H.F. Cut of Grid V1F	"	"	"	" 15%	"	" (1-C)
C15A	R.F. Filter Audio Diode V3A	66095	66095C	"	" 15%	"	" (A)
B	R.F. Filter Bias Rect. V6A	"	"	"	" 15%	"	" (A)
C	Cath. By Pass V4A	"	"	"	" 15%	"	" (A)
D	R.F. Filter Bias from V6A	"	"	"	" 15%	"	" (A)
E	Voltage Div. R/T Mod. V3A	"	"	"	" 15%	"	" (A)
F	Screen By Pass V4A	"	"	"	" 15%		" (A)
G	Plate Grid Quench Osc. V1D	"	"	"	" 15%	"	" (B)
H	H.T. Filter V1D	"	"	"	" 15%	"	" (B)
J	Plate V1E	"	"	"	" 15%	"	" (B)
K	Heater CCT. By Pass V7A	"	"	"	" 15%	"	" (B)
L	Heater CCT. By Pass V7A	"	"	"	" 15%	"	" (B)
M	R.F. Filter "Drive" Meter Shunt	"	"	"	" 15%	"	" (A)
C16A	Cath. By Pass V3A	67136	67136C	Plain Plate Elec. Mfd. Min.	12.0-0+100	50	" (A)
B	Cath. By Pass V8A	"	"	"	" "	"	" (B)

1. C14B is not in all Canadian and U. S. sets.

2. Unless otherwise indicated read tolerances (±).

(Table continued on next page)

TABLE IX—Continued
COMPONENTS AND PARTS FOR WIRELESS SET NO. 19, MARK II—Continued

Circuit Ref.	Location	Pye Part No. P.C.	N.E. Part No. P.C.	Type No.	Value Tol.	Rating	Used On
Condensers:							
C17A	Coup. Diode to Gain Cont. V3A	68152	68152C	Mica	.002 Mfd. 20%	1000	S/R (A)
B	Volt. Div. R/T Mod. V3A	"	"	"	" " 20%	"	" (A)
C	R.F. Filter Meter "AE" CCT.	"	"	"	" " 20%	"	" (A)
D	Cath. By Pass V4A	"	"	"	" " 20%	"	" (A)
C18A	Diole Plate Coup. V3A	66242	66242C	" 20p	.00002 Mfd. 20%	"	" (A)
C19A	Tuning BFO Grid V2B (Triode)	66061	66061C	Compensated Ceramic	.00009 Mfd. 20%	1300	" (A)
C20A	By Pass Plate V2B (Triode)	66045	66045C	Mica 27	.002 Mfd. 15%	1000	" (A)
B	Screen By Pass V5A	"	"	"	" " 15%	"	" (A)
*C21A	Coup. Rec. Osc. V2A V2B	66240	66240C-191	1469S (Mica)	.00003 Mfd. 20%	1000	" (A)
* B	Coup. Tank Ant. V7A	66240	66240C	" "			
C22A	Plate Grid Coup. V3A	68183	68183C 25T	X4850 7p Oil Impreg. Rolled Foil.	.000007 Mfd. 5%	"	" (B)
					.025 Mfd. 15%	500	" (A)
C23A	Block Cap. Plate V4A	68147	68147C	Mica	.005 Mfd. 20%	600	" (A)
C24A	Aerial Blocking	45984	45984C	R15194	.001 Mfd	5000	Vario-meter
C25A	"B" Set Tuning	80162	80162C	10C/2572	2.5/6.5 Mfd. Per Section Variable	Split Stator	S/R (B)

1. Some British and Canadian sets have a .000005 Mfd. condenser for C21A.
2. Items marked (*) have rating changed from English specification.
3. Unless otherwise indicated read tolerances (±).

TABLE IX—Continued

COMPONENTS AND PARTS FOR WIRELESS SET NO. 19, MARK II—Continued

Circuit Ref.	Location	Pye Part No. P.C.	N.E. Part No. P.C.	Type No.	Value Tol.	Rating	Used On
Condensers:							
C26A	R.F. Filter for Rect.	66758	66758C	Mica 1T	.001 Mfd. 25%	1000	Vario-meter
C27A	Grid Coup. V7A	66152	66152C	Class D 20 Ceramic	.00002 Mfd. 10%	1300	S/R (B)
C28A	Feedback Quench V1D	66202	66202C	Mica	.0007 Mfd. 5%	1000	" (B)
C29A	Output Quench to Gain Contr.	68184	68184C	"	.01 Mfd 15%	600	" (B)
B	Plate V1E to Grid V8A	"	"	"	" " 15%	"	" (B)
C	Plate V1F to Grid V8B	"	"	"	" " 15%	"	" (1-C)
C30A	Quench Freq. Filt. Plate V1E	66747	66747C	"	.001 Mfd. 15%	1000	" (B)
B	Quench Freq. Filt. Plate V1E	"	"	"	" " 15%	"	" (B)
C31A	Decoupling HT to V1D	67193	67193C	Plain Plate Elec.	2.0 Mfd.–0+100% (Min)	350	" (B)
B	Decoupling HT to V1E	"	"	"	" "	"	" (B)
C	Decoupling HT to V1F	"	"	"	" "	"	" (1-C)
C32A	Decoupling HT to Power Unit	67192	67192C	Plain Plate Elec.	3.2 Mfd. 50% –10%	275	Power Supply
C33A	RF Filter 500 V. Rot. Trans.	68121	68121C	X4851 100T	0.1 Mfd. 10%	1500	"
B	Decoupling HT to V4A	"	"	"	" " 10%	"	S/R A)

1. Unless otherwise indicated read tolerances (±).

(Table continued on next page)

TABLE IX—Continued

COMPONENTS AND PARTS FOR WIRELESS SET NO. 19, MARK II—Continued

Circuit Ref.	Location	Pye Part No. P.C.	N.E. Part No. P.C.	Type No.	Value Tol.	Rating	Used On
Condensers:							
C34A	Grid Drive Contr. V4A	80127/A	80127C/A	R15196-2	7-45 Mmf. Varia. Ceramic	Pye Part Mica Comp. Type	S/R (A) " (A) " (A) " (B)
C35B	Osc. Trimmer (LF) V2A	80178	See Note 3	R15196-3	3-13 Mmf. Varia. Ceramic	"	
C36A	Tank Blocking V4A	66148	66148C	Mica	.01 Mfd. 10%	2200	
C37A	Quench Res. CCT. V1D	66172	66172C	1468S Mica	.0005 Mfd. 2%	1000	
Sockets:	**Description**						
S01A	6 Point Pye Socket	75430	75430C				
B	" " "	"	"				
C	" " "	"	"				
S02A	12 " " "	75424	75424C				
S03A		Comprising					
B		76484	76484				
C		90681	90681				
D		90737	90737				
E							
S04A	Feeder Socket "A" Set	75363	75363				
B	Feeder Socket Variometer	"	"				
S05A	Feeder Socket "B" Set	"	"				
Key:							
K1A	Key & Plug Assembly	90691	90691C-1				
Rectifier:							
W1A	Westector-Aer. Var.	90747	90747C	*ON P.S.	*ON A/V 1	CONT. #2	Var.

1. C11A and C35B are stocked in maintenance spares as one Assy. Per PC80128C-191 and the whole Assy. should be replaced when one part is defective.
2. Items marked (*) have rating changed from English specification. 3. Unless otherwise indicated read tolerances (±).

(Table continued on next page)

TABLE IX—Continued
COMPONENTS AND PARTS FOR WIRELESS SET NO. 19, MARK II—Continued

Circuit Ref.	Description	Pye Part No. P.C.	N.E. Part No. P.C.	Type No.	Value Tol.	Rating	Used On
Fuses:							
F1A-C	Fuses—250 MA.P.S.	90267	90267C	2		1	Supply U. Control U.
Lamps:							
P1A	Lamp Pilot	90615	90615C	1			Supply U.
P1B	Lamp Pilot	"	"			1	Control U.
Inductances:							
L 1A	Aer. Vario.	75608	75608C				Var.
L 2A	Choke on Var.	79115	79115C				Var.
B	Meter Choke		79115C				
			191				S/R (A)
L2-1A			79115C				Var.
L 3A	P.A. Tun. Coil	78465	78465C				S/R (A)
	Drive Anode Tun. Ind. H.F.	78470	78470C				" "
*L 5A	L.F. Osc. Ind. (BO	78436	78436C				" "
* B	L.F. Osc. Coup.						
L 6A	Drive Anode Tun. Ind. L.F.	78471	78471C				" "
L 7A	Sender F.C. Tun. Ind. L.F.	78472	78472C				" "
L 8A	1st IF Trans.	77366	77366C				" "
B	2nd IF Trans.						

1. Items marked (*) are not separately demandable.

(Table continued on next page)

TABLE IX—Continued
COMPONENTS AND PARTS FOR WIRELESS SET NO. 19, MARK II—Continued

Circuit Ref.	Description	Pye Part No. P.C.	N.E. Part No. P.C.	Type No.	Value Tol.	Rating	Used On
Inductances:							
L 9A	3rd IF Trans.	77367	77367C				" "
L10A	R.F. Choke-V1A Grid	79116	79116C				" "
L11A	UHF Tun. Ind.	78432	78432C				" (B)
L12A	UHF Aer. Choke	79125	79125C				" "
L13A	UHF V7A Cath. Ch.	79114	79114C				" "
L14A	Quench Tun. V1D	78437	78437C				" "
L15A	Quench Anod. V1D	78320	78320C				" "
L16A	LT Choke—P.S.	79112	79112C				P/S
L17A	LT Choke—P.S.	79117					"
L18A	RF Choke—500 V	78439	78439C				"
B	RF Choke—275 V						"
L19A	Relay Coil "A"	90611	90611C				S/R (A)
B	Relay Coil "B"						" (B)
L20A	Buzzer Coil	90788	90788C				J/B
L21A	Sender F.C. Anode Tun. Ind. LF	78473	78473C				S/R (A)
*L22A	RF Rec. Tun. In.	78468	78468C				" "
B	RF Rec. H.F. Coup.						
*L23A	RF Rec. Tun. In.	78469	78469C				" "
B	RF Rec. H.F. Coup.						
*L24A	RF Osc. Tun. Ind. HF	78466	78566C				" "
B	RF Osc. Coup.						
*L25A	RF Osc. T.I. LF	78467	78567C				" "
B	RF Osc. Coup.						
L26A	B Aerial Choke	79126	79126C				" (B)

1. Items marked (*) are not separately demandable.

(Table continued on next page)

TABLE IX—Continued
COMPONENTS AND PARTS FOR WIRELESS SET NO. 19, MARK II—Continued

Circuit Ref.	Description	Pye Part No. P.C.	N.E. Part No. P.C.	Type No.	Value Tol.	Rating	Used On
Trans-formers:							
T1A	Aer. Cur. Meter Tran.	77371	77371C				Var.
T2A	Rec. Out, "A"	77369	77369C				S/R (A)
T3A	Mic. Tran. "A"	77370	77370C				" "
T4A	" " "B"	77368	77368C				" "
T4B	" " 1-C	"	"				" 1-C
*T5A	Out, " "B"	76332	76332C				" (B)
*T6A	" " 1-C	"	"				" 1-C
T7A	Pow. Mic. Trans.	77374	77374C	A29203			J/B 1
T7B	" " "	"	"				"
Switches:							Control U.
S 1A	6 Pole 3 Position Control Switch	83212	83212C				"
B	"	"	"				"
C	"	"	"				"
D	"	"	"				
S 2A	Pressel Switch—Hand Mic.	76355	76355C				
B	"	"	"				
C	"	"	"				
S 3A	Press Button—Call Sign	90610	90610C				Junction Dist.
B	Press Button—Net	"	"				S/R (A)
S 4A	Press Button—Power Mic.	90618	90618C				
B	"	"	"				
S 5A	Relay-S/R-#19 (A)	90611	90611C				" "
B	" " "B"	"	"				" (B)

1. Items marked (*) are not separately demandable.

(Table continued on next page)

TABLE IX—Continued

COMPONENTS AND PARTS FOR WIRELESS SET NO. 19, MARK II—Continued

Circuit Ref.	Description	Pye Part No. P.C.	N.E. Part No. P.C.	Type No.	Value Tol.	Rating	Used On
Switches:							
S 6A	Two Pole On/Off Power Sw.	83194	83194C				Supply U.
S 7A	MCW, R/T, CW, SW, 3 Pos. 9 Pole	83217	83217C				S/R (A)
S 8A	Meter, Sw, 6 Pos. 2 Pole	83206	83206C				" "
S 9A	On/Off Single Pole Tog.	83223	83223C				" (B)
S10A	On/Off Double Pole Tog.	83220	83220C				" "
S11A	Wave Change Switch 2 Pos. 12 Pole	83221	83221C				" (A)
	Wave Change Switch Ceramic		83221C-1				
S13A	3 Position Sw.	83217	83217C				Control U. MK. II
S14A	2 Position Sw.	83249	83249C				Control U. MK. II
Valves:							
V1A-V1F to F	6K7G R.F. Pentode	86182	86182C				S/R
V2A B	6K8G Triode Hexode	86184	86184C				"
V3A	6B8G Double Diode Pentode	86183	86183C				"
V4A	807 (ATS25) Beam Power Tetrode	86186	86186C				"

(Table continued on next page)

TABLE IX—Concluded
COMPONENTS AND PARTS FOR WIRELESS SET NO. 19, MARK II—Concluded

Circuit Ref.	Description	Pye Part No. P.C.	N.E. Part No. P.C.	Type No.	Value Tol.	Rating	Used On
Valves:							
V5A	ARP35 or EF50 R.F. Pentode	86097	86097C				"
V6A	6H6 or ARDD5 or EB34 Double Diode	86170	86170C				"
V7A	E1148 UHF or CV6	86187	86187C				"
V8A	6V6GJ or (ARP32) Beam Power Tetrode	86185	86185C				"
B	" " "	"	"				
Plugs:							
PL1A	6 Point Pye Plug	75429	75419C-191				"
B	" " " "	"	75429C				Supply U.
C	" " " "	"	"				"
PL2A	12 Point Pye Plug	75423	75423C				"
PL3A	5 Point Snatch Plug	Compr	ising				S/R
B	" " " "	76483	76483				
C	" " " "	90680	90680				
D & E	" " " "	90738	90738				
PL4A	Feeder Plug	75360	75360 C/P-191				S/R (A)
B	" "	"	"				" (B)
C	" "	"	"				Var.
Jack:							
J1A	Key Jack "A" Set	76150	76150C	*On S/R 1			S/R (A)

1. Items marked (*) are not separately demandable.

TABLE X
SET AND STANDARD KIT
REF. NO. P. C. 75527C-191

Item No.	Pye Ref. No.	Cat. No.	Description	Minimum for Work	Essential Spares	Total
			SECTION W.2			
1	90615C	WB-1490	Bulbs, 12 Volt F (e) (b)	2	4	6
			SECTION Z.1			
			Aerial Bases			
2	76387C	ZA1763	No. 8	1	—	1
3	75525C	ZA1764	No. 9	1	—	1
			Antennae Rods			
			F Sections			
4	90742C	ZA0894	No. 1	1	2	3
5	90741C	ZA0895	No. 2	1	2	3
6	90740C	ZA0896	No. 3	1	2	3
7	90767C	ZA1771	G Sections	1	2	3
			Brushes, Dynamo or Motor			
8	90769C	ZA0742	No. 4 (b)	—	4	4
9	90770C	ZA1823	No. 18 (b)	—	2	2
10	76550C	ZA1094	Cases, Spare Parts, No. 5C	1	—	1
			Connectors—6 Point			
11	76442C/A	ZA1780	No. 4A	1	—	1
			Fuses, cartridge			
12	90267C	ZA3579	No. 2, 250 MA (b)	—	12	12

(b) Carried in Cases. Spare Parts, No. 5C.
(e) Four (4) only supplied in cases, spare parts, No. 5C. Remaining two (2) supplied with Wireless Set No. 19 Mk. II (Canadian) and Supply Unit No. 1.

(Table continued on next page)

TABLE X—Continued
SET AND STANDARD KIT—Continued
REF. NO. P. C. 75527C-191—Continued

Item No.	Pye Ref. No.	Cat. No.	Description	Minimum for Work	Essential Spares	Total
13	90266C Det. 3	ZA1957	Holders, No. 1 Caps (b)	—	2	2
14	R11950	ZA0937	Key and Plug Assemblies No. 9 (k) (b)	1	—	1
15	76338C	ZA2904	Microphone and Receiver Headgear Assemblies No. 1	2	1	3
			Plugs			
			Single			
			No. 26			
15A	90154C	ZA2814/1	Springs, Retaining (b)	—	3	3
			6 Point No. 4			
15B	90521C	ZA2815/1	Springs Retaining (b)	—	3	3
			12 Point No. 1			
15C	90520C	ZA2816/1	Springs Retaining (b)	—	4	4
16	R11958-1		Satchels, Signals (L)	1	—	1
			Sockets			
			6 Point, No. 5			
16A	90546C	ZA10297	Clips, Spring	—	3	3
			12 Point No. 1			
16B	90545C	ZA10298	Clips, Spring	—	4	4

(b) Carried in Cases. Spare Parts, No. 5C.
(k) Key and Plug Assembly, PC90691C-1 will be supplied instead of Key and Plug Assembly, R.11950 until present stock is exhausted.
(L) Satchels Signals PC90107, ZA6292 will be supplied instead of R.11958-1 until present stock is exhausted.

(Table continued on next page)

TABLE X—Continued
SET AND STANDARD KIT—Continued
REF. NO. P. C. 75527C-191—Continued

Item No.	Pye Ref. No.	Cat. No.	Description		Minimum for Work	Essential Spares	Total
			Valves, W.T. Type				
17	86170C	ZA3056	A.R.D.D. 5 (6H6)	(c)	1	1	2
18	86097C	ZA3058	A.R.P. 35 (EF-50)	(c)	1	1	2
19	86186C	ZA3496	A.T.S. 25 (807)	(c)	1	1	2
20	86187C-191	ZA3055	E1148 (CV6)	(c)	1	1	2
21	86183C	ZA 5305	6B8G	(c)	1	1	2
22	86182C	ZA5699	6K7G	(c)	6	6	12
23	86184C	ZA5307	6K8G	(c)	2	2	4
24	86185C	ZA5306	6V6G	(c)	2	2	4
25		ZA7400	Watches, Non-magnetic, W. T.	(a)	1	—	1
			Wireless Sets, No. 19—				
26	75464C	ZA3102	Carriers No. 1		1	—	1
			Straps—				
27		ZA2987	No. 1	(d)	1	—	1
28		ZA2988	No. 2	(d)	1	—	1
29	76873C	ZA3104	Cases, Spare Valves		1	—	1
			Connectors, Pig-tail—				
30	76556C	ZA1868	No. 1	(b)	—	2	2
31	76557C	ZA10024	No. 2	(b)	—	2	2

(a) Issued separately by Ordnance Corps.
(b) Carried in Cases. Spare Parts, No. 5C.
(c) One-half quantity carried in Wireless Sets No. 19 Case, Spare Valves. Remainder in Wireless Set No. 19 Mk. II (Canadian).
(d) Normally issued fitted to Wireless Sets No. 19, Carriers No. 1.

(Table continued on next page)

TABLE X—Concluded
SET AND STANDARD KIT—Concluded
REF. NO. P. C. 75527C-191—Concluded

Item No.	Pye Ref. No.	Cat. No.	Description		Minimum for Work	Essential Spares	Total
			Covers, Protecting—				
32		ZA2950	No. 1	(g)	1	—	1
33		ZA2951	No. 2	(h)	1	—	1
			Covers, Waterproof—				
34	90816C	ZA2952	No. 1		1	—	1
			Leads, Aerials—				
35	76421C	ZA3141	No. 1		1	—	1
36	90818	ZA10202	Pads, Mounting		4	—	4
37	32089	ZA10084	Screws, Clamping	(b)	—	6	6
38	75450C	ZA3108	Supply Units, No. 1		1	—	1
39	92049C	ZA10178	Wireless Sets, No. 19 Mk. II (Canadian)		1	—	1
39A	76418C-191		Aerial, Dummy	(b) (j)	—	1	1
40	75608C	ZA10214	Aerial Variometer, Mk. II		1	—	1
41	90771	ZA10207	Labels, Instruction	(f)	1	—	1
42	69250C		Carton		1	—	1
43	90653C		Grommets		2	—	2
43A	90816C-191		Grommet, Blind	(b)	3	3	6
44	90777C-191		Label		1	—	1
45	90772C-195	ZA3109	Working Instructions		1	—	1

(b) Carried in Cases. Spare Parts, No. 5C.
(f) Issued tied to Aerial Variometer Mk. II to be detached and carried in cases, spare parts, No. 5C.
(g) Issued fitted to Wireless Set No. 19 Mk. II (Canadian).
(h) Issued fitted to Supply Unit No. 1.
(j) Will be included in Kits when available.

TABLE XI
INTERCHANGEABILITY LIST
(British, Canadian and U. S. Manufacture)

Name or Designation	INTERCHANGEABLE		Remarks
	Mechanical	Electrical	
Main Tuning Condenser C9A, B, C, D	See Remarks	Yes	British condensers will mount in Canadian sets without change. To mount Canadian condenser in British chassis, two .180 inch holes must be drilled. P. A. tuning condensers are fully mutually interchangeable. The variable condenser housing as well as flick mechanism parts must be changed in all U. S. sets when substituting British or early production Canadian condensers. When substituting U. S. condensers in British and early Canadian receivers the housing as well as flick mechanism parts must be changed to U. S. types.
Tuning Condenser Dials	Yes	See Remarks	If a Canadian condenser is put in a British set, the dials should also be changed and vice versa.
Trimmer Condensers C10A, B, C, D, E, F C34A, C35A, B	See Remarks	See Remarks	C10A, B, C, D, E, F and C35A are fully interchangeable. C34A requires two .120 inch holes if a Canadian or U. S. condenser is mounted in a British set. British condensers may be mounted in a Canadian or U. S. set without changes. In Canadian or U. S. sets, C35A is mounted on a bracket with C11A, and the complete assembly may be mounted in British sets. A British condenser C35B can be mounted in a Canadian or U. S. set.
Series Trimmer Condenser C11A	Yes	See Remarks	The British mica compression condenser (230-800 mmf) has been replaced by an air trimmer (7-140 mmf) in parallel with a fixed mica condenser. C12A (1780 mmf) in Canadian and U. S. sets.

(Table continued on next page)

TABLE XI—Continued
INTERCHANGEABILITY LIST—Continued
(British, Canadian and U. S. Manufacture)—Continued

Name or Designation	INTERCHANGEABLE		Remarks
	Mechanical	Electrical	
Resistor Panel	Yes	Yes	Fully interchangeable.
R. F. Coils	Yes	Yes	Fully interchangeable.
Band-Change Switch S11A	Yes	Yes	Fully interchangeable.
Valve sockets for V2A, V2B	Yes	Yes	Fully interchangeable.
Tubular Paper Condensers	Yes	Yes	Fully interchangeable, although diameter of Canadian and U. S. units approximately 1/16 inch greater than British.
Small Tubular Paper Condensers	Yes	Yes	Fully interchangeable, as Canadian and U. S. sets are equipped with mounting clips to mount British replacement units.
Mica Condensers	See Remarks	Yes	British condensers will mount in Canadian and U. S. sets without change. To mount Canadian or U. S. units in British sets one .120 inch hole should be drilled, if both mounting screws are considered necessary.

(Table continued on next page)

TABLE XI—Continued
INTERCHANGEABILITY LIST—Continued
(British, Canadian and U. S. Manufacture)—Continued

Name or Designation	INTERCHANGEABLE		Remarks
	Mechanical	Electrical	
Electrolytic Condensers	See Remarks	Yes	To mount British condenser in Canadian or U. S. set, condenser should be taped to fit under clamp. To mount Canadian or U. S. in British set, clamp must be bent slightly (diameter of Canadian and U. S. units 3/32 inch greater than British).
Relay Switches S5A, S5B	See Remarks	Yes	Different mounting screws; No. 4BA British, U. S. 6-40 threads on Canadian and U. S. relays, fully interchangeable if supplied with mounting screws. (Canadian or U. S. spares are supplied with same.)
Resistors	Yes	Yes	Resistors R4A, C, R6A, E, R7J, K, R9D, R11A, R12A, R18A, B, R19B, R34A, R37A, R39A, R44A, have been increased in power and are fully interchangeable.
Condenser C6A	Yes	Yes	Fully interchangeable.
Heterodyne Tone Control R14A	See Remarks	Yes	British control will mount in Canadian or U. S. set without change. To mount Canadian or U. S. control in British set, it is necessary to slot the mounting hole with a file.

(Table continued on next page)

TABLE XI—Continued
INTERCHANGEABILITY LIST—Continued
(British, Canadian and U. S. Manufacture)—Continued

Name or Designation	INTERCHANGEABLE		Remarks
	Mechanical	Electrical	
Heterodyne Oscillator Coil	Yes	Yes	Complete coil assembly fully interchangeable.
I. F. Transformers	Yes	Yes	Complete assembly fully interchangeable as a unit. No external shunting resistors required with U. S. Units. See note on transformer shield. In some U. S. sets, I. F. adjustment is made from the bottom of the transformer and in others from the side.
Microphone Transformer	Yes	Yes	Completely interchangeable.
"B" Set Tuning Condenser, C25A	Yes	Yes	Completely interchangeable.
Test Meter	See Remark	Yes	Mounting ring needed with U. S. meter in Canadian or British set.
Test Meter Resistors	Yes	Yes	R21C, R24A, R26A, are mounted on a bakelite panel and are fully interchangeable.

(Table continued on next page)

TABLE XI—Continued
INTERCHANGEABILITY LIST—Continued
(British, Canadian and U. S. Manufacture)—Continued

Name or Designation	INTERCHANGEABLE		Remarks
	Mechanical	Electrical	
P. A. Tuning Coil	Yes	Yes	Fully interchangeable.
Transformers T5A, T6A	Yes	Yes	Complete assembly fully interchangeable.
Transformer T2A	Yes	Yes	Fully interchangeable.
Switch S3B	Yes	Yes	Fully interchangeable.
Switch S8A	Yes	Yes	Uses U. S. threads on bushing, but fully interchangeable as switches are supplied with mounting nuts.
Switch S6A	See Remarks	Yes	British switch can be mounted in Canadian or U. S. set without change; to mount Canadian or U. S. switch in British set requires filing of a slot.
Switches S9A & S10A	Yes	Yes	Fully interchangeable as mounting nuts are specified with switches.

(Table continued on next page)

TABLE XI—Concluded
INTERCHANGEABILITY LIST—Concluded
(British, Canadian and U. S. Manufacture)—Concluded

Name or Designation	INTERCHANGEABLE		Remarks
	Mechanical	Electrical	
Fuse Holders	See Remarks	Yes	Fuses and fuse holders fully interchangeable. Fuse extractors are not interchangeable.
Valve Shields	See Remarks	Yes	Body and cap fully interchangeable as unit. British caps will not fit Canadian or U. S. bodies and vice versa.
Parts L2B, L10A, C1A, C2A, C36A	Yes	Yes	Are mounted on a bakelite panel on P. A. tuning condenser. All parts fully interchangeable.
Buzzer	Yes	Yes	Buzzer in junction distribution box No. 1 fully interchangeable.
Transformer T3A, T4A, B	Yes	Yes	Fully interchangeable.
Jack J1A	See Remarks	Yes	British jack can be mounted in Canadian or U. S. set without change; to mount Canadian or U. S. jack in British set requires drilling of two .120" holes.
Valves			
ARDD5 or 6H6	Yes	Yes	6H6 (VT90) in U. S. sets fully interchangeable.
ARP35 or EF50	Yes	Yes	EF50 (VT250) in U. S. sets fully interchangeable.
ATS25 or 807	Yes	Yes	807 (VT100) & (VT100A) in U. S. sets fully interchangeable.
CV6 or E-1148	Yes	Yes	Canadian sets using an E-1148 valve have a resistor R33.1A (27,000 ohms) parallel with R33A (47,000 ohms). When using a CV6 valve disconnect R33.1A in order to obtain increased sensitivity.

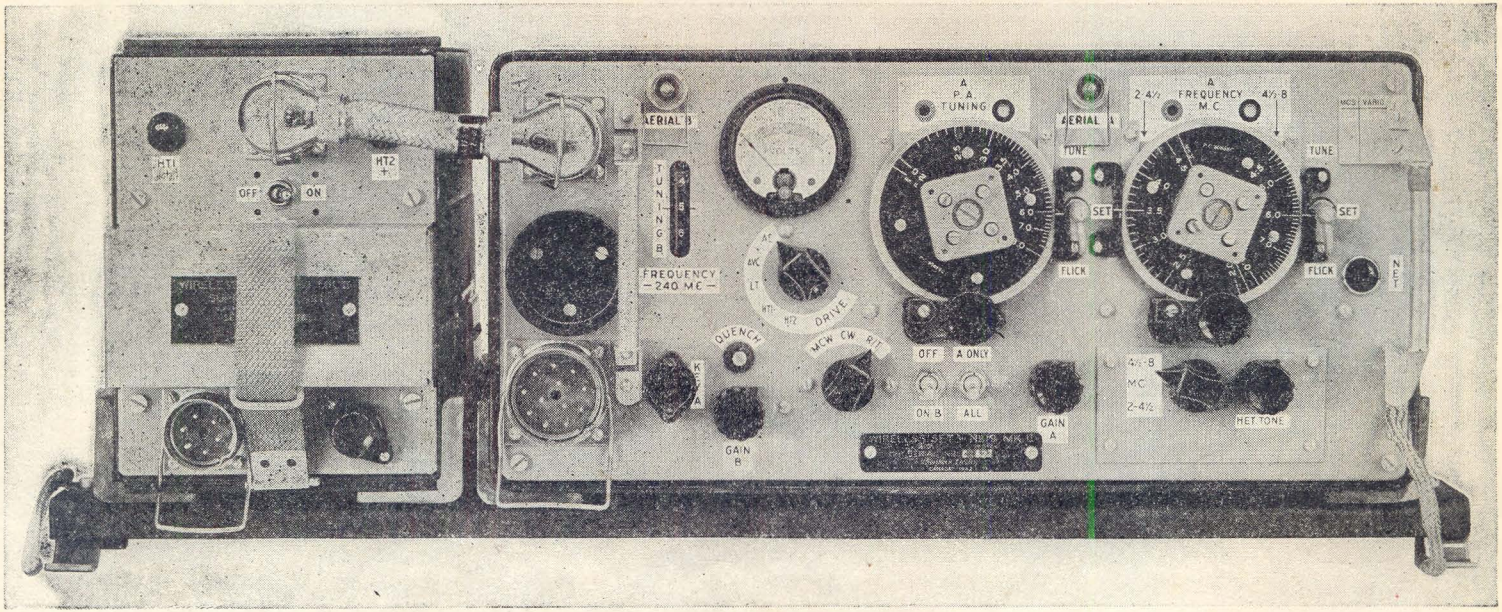

PHOTO 1—FRONT VIEW OF SET AND SUPPLY UNIT

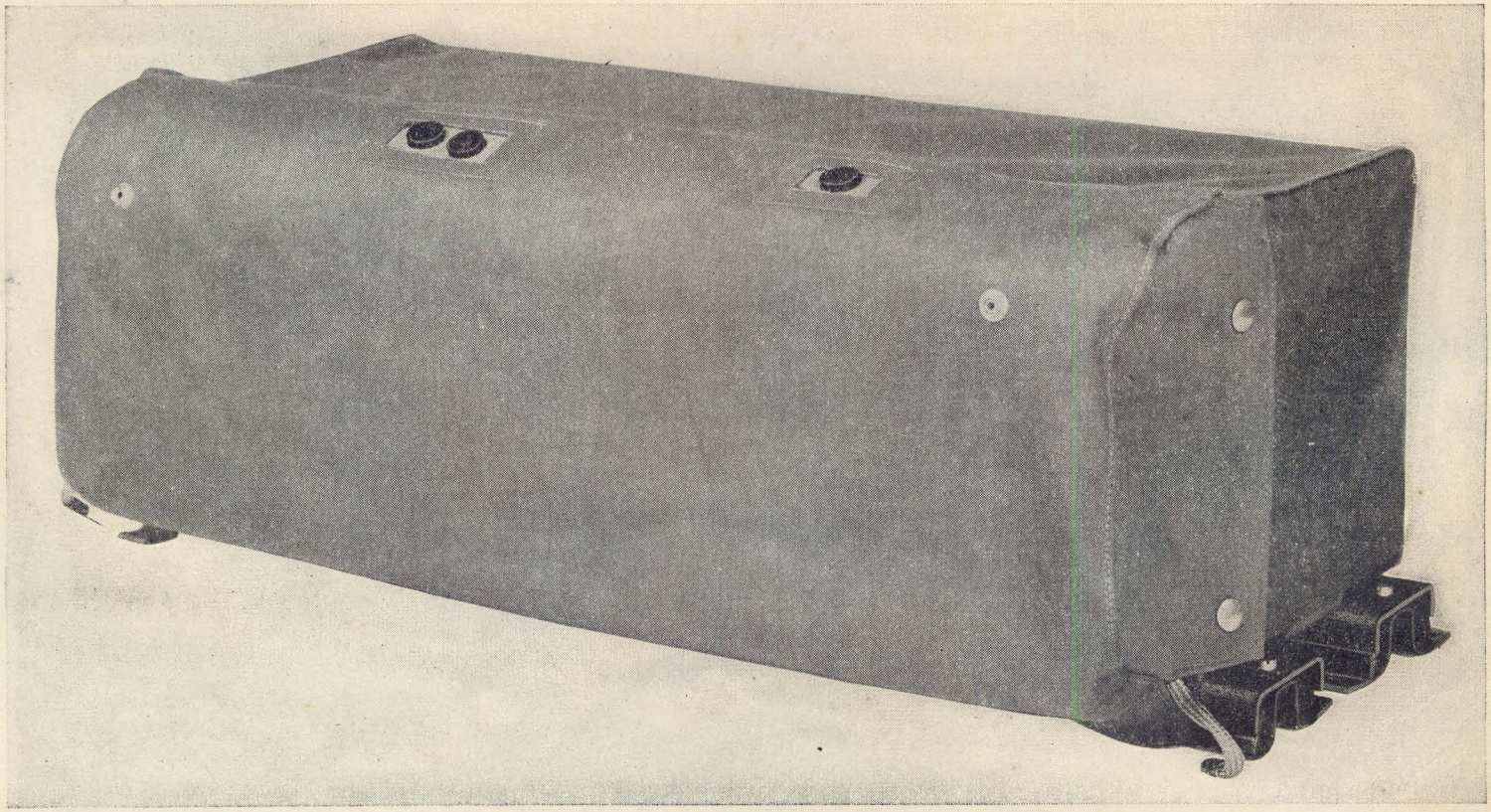

PHOTO 2—FRONT VIEW WITH GUARD AND WATERPROOF COVER

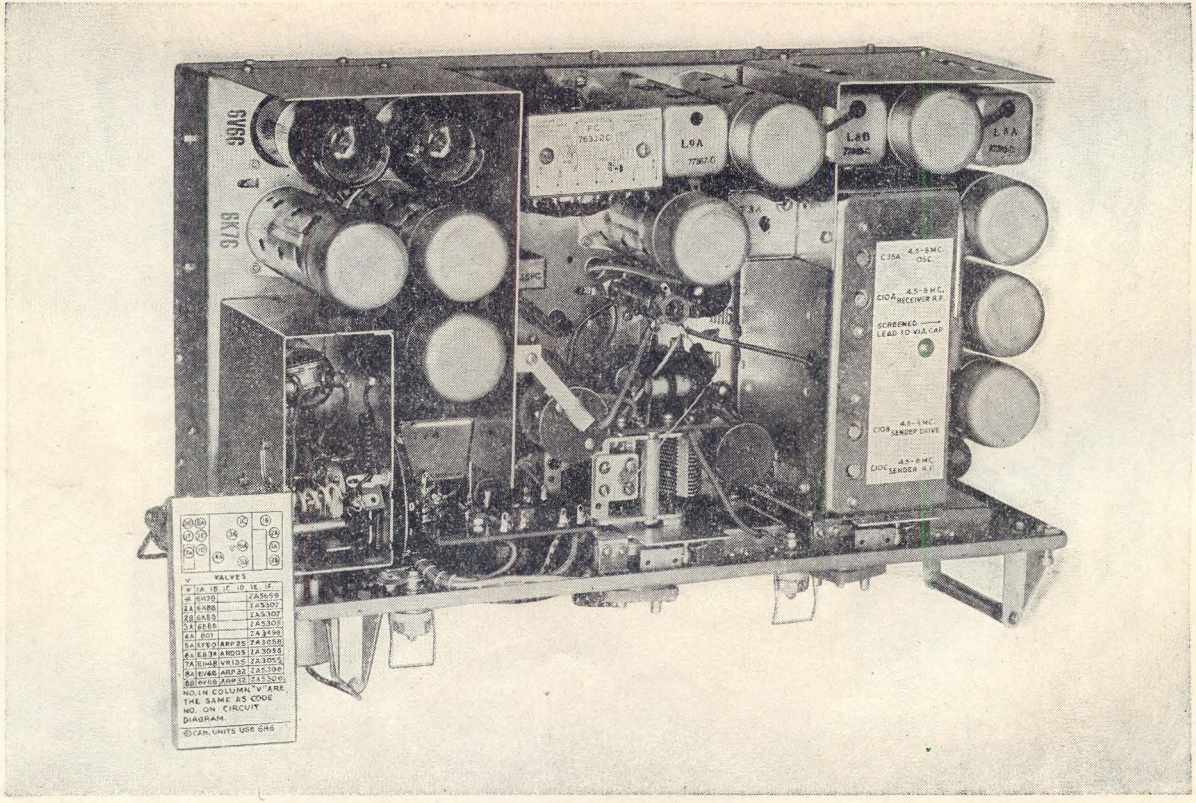

PHOTO 3A—INSIDE VIEW OF SENDER/RECEIVER (TOP)

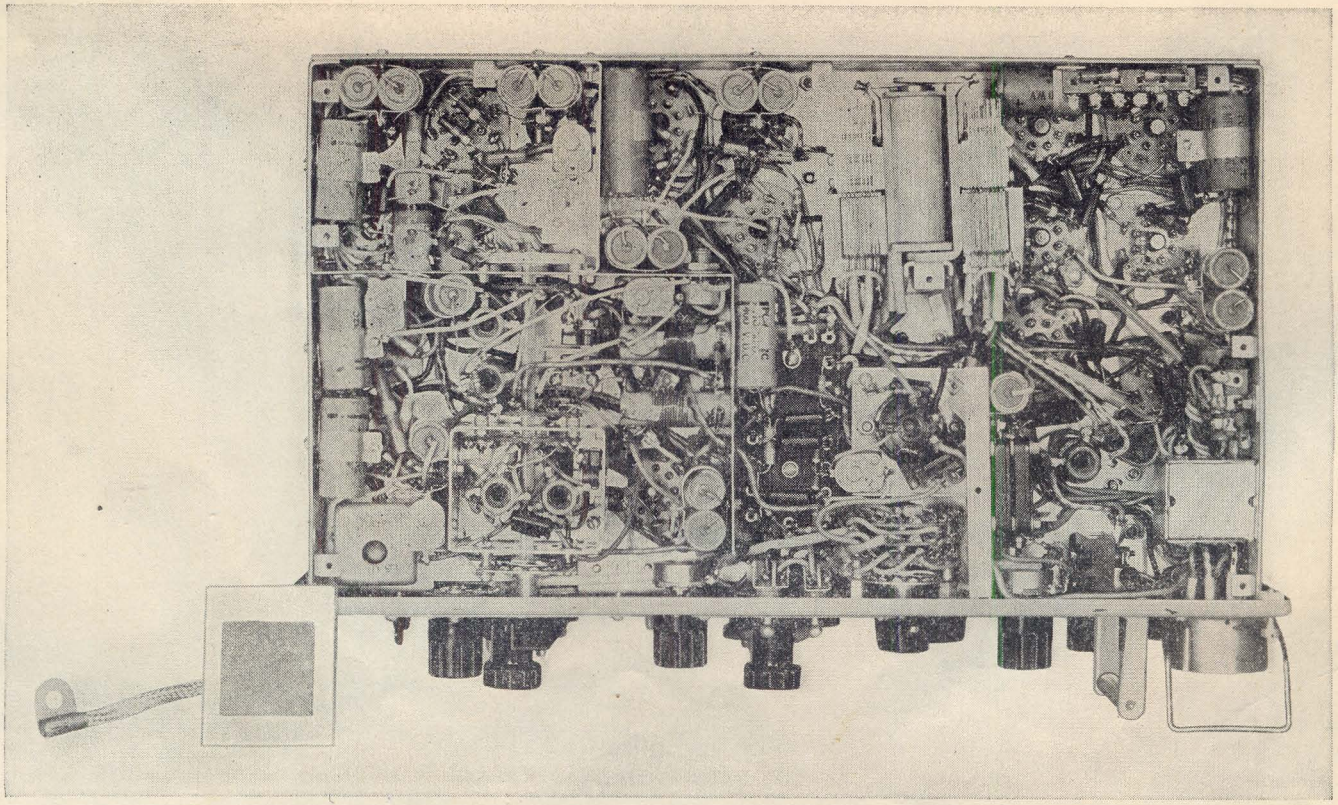

PHOTO 3B—INSIDE VIEW OF SENDER/RECEIVER (UNDERNEATH)

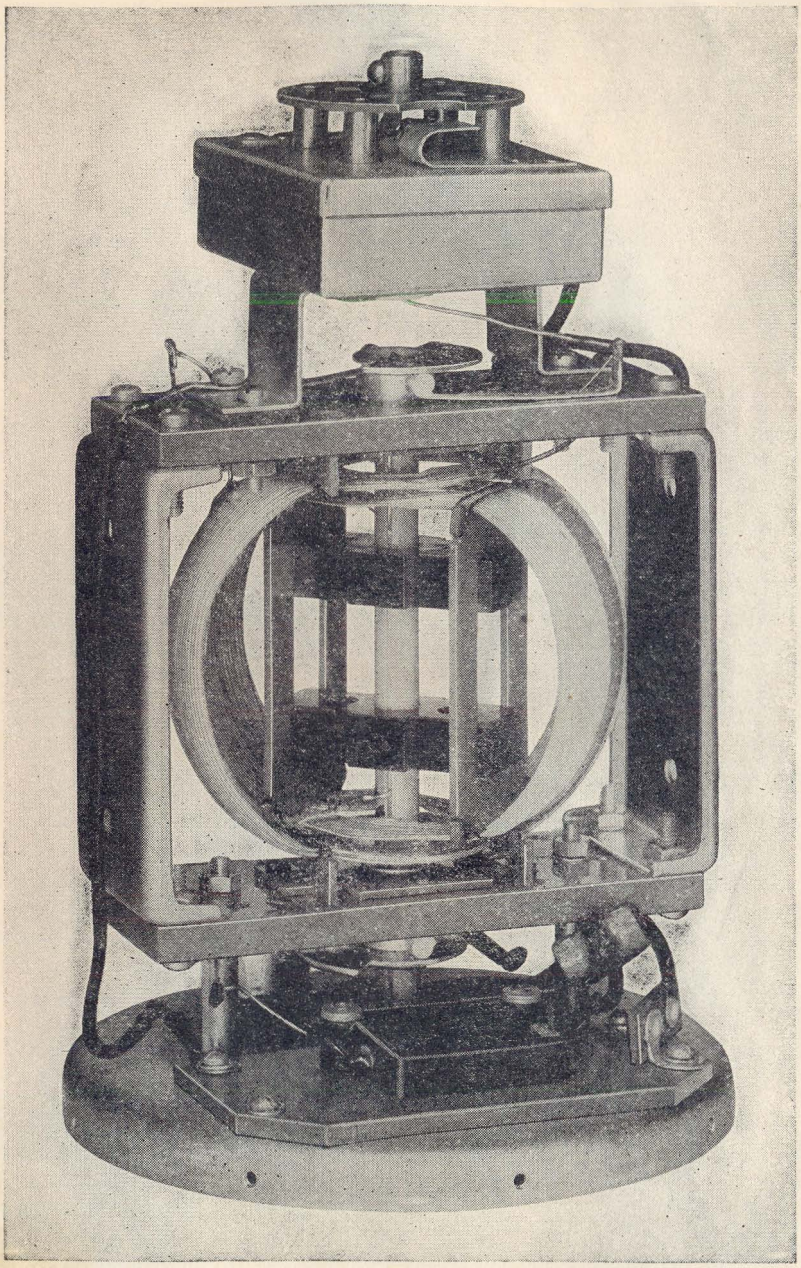

PHOTO 4—INSIDE VIEW OF VARIOMETER

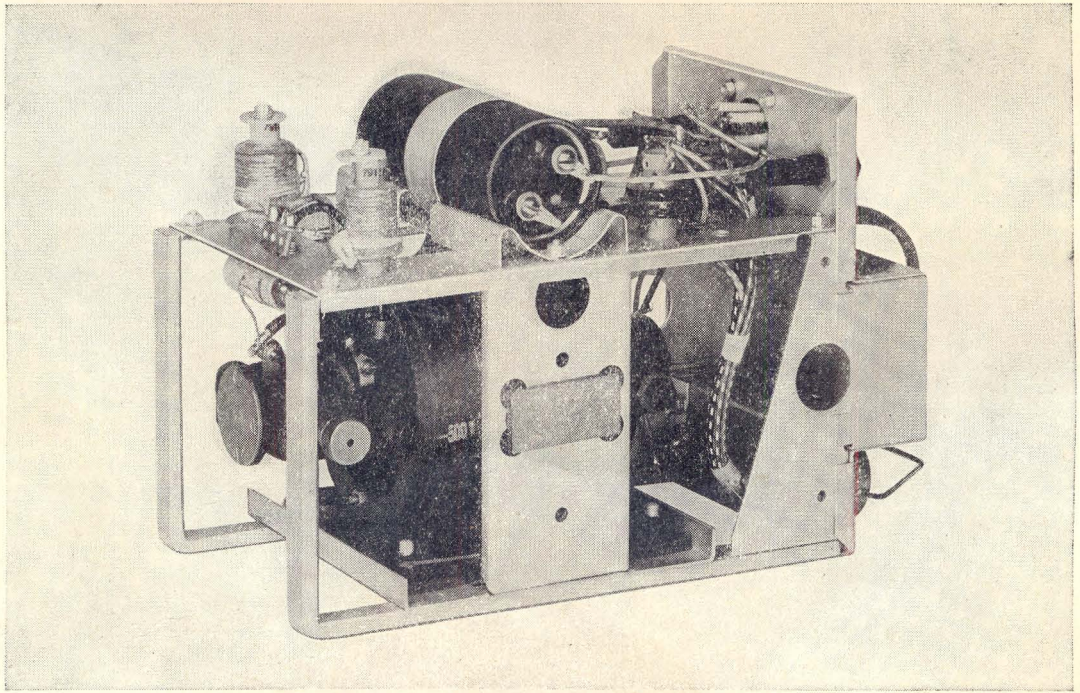

PHOTO 5—INSIDE VIEW OF SUPPLY UNIT

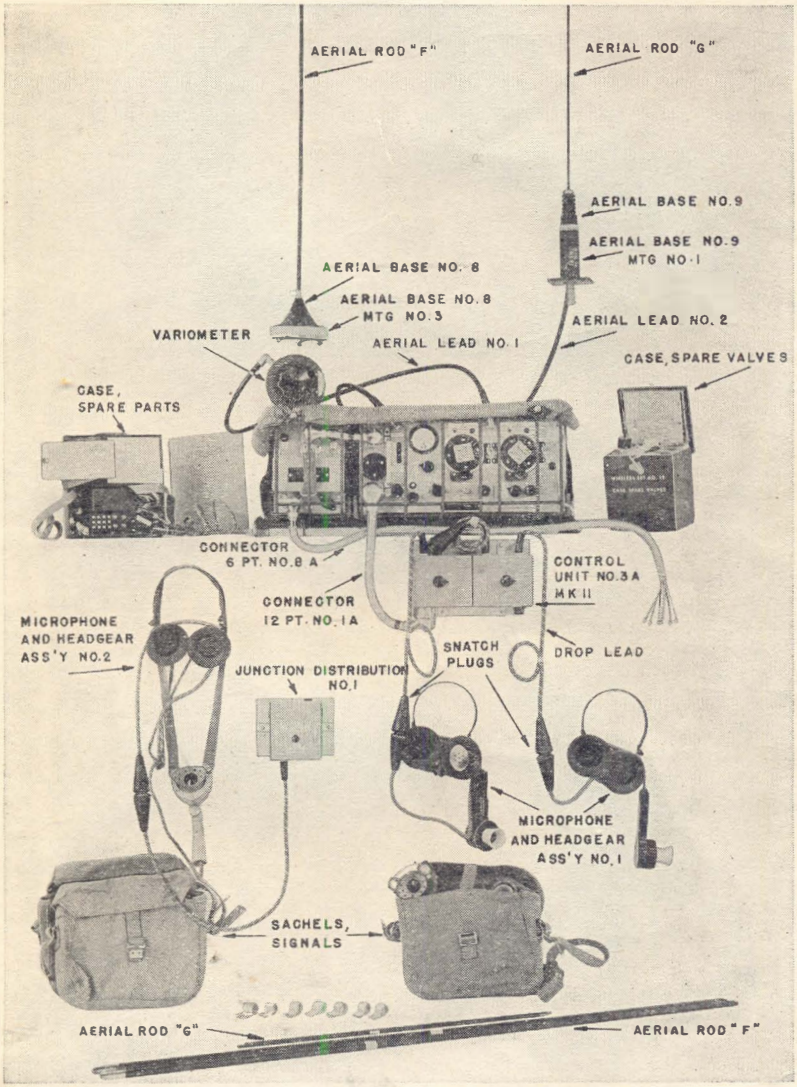

PHOTO 6—INSTALLATION EQUIPMENT FOR INFANTRY TANK MK111***

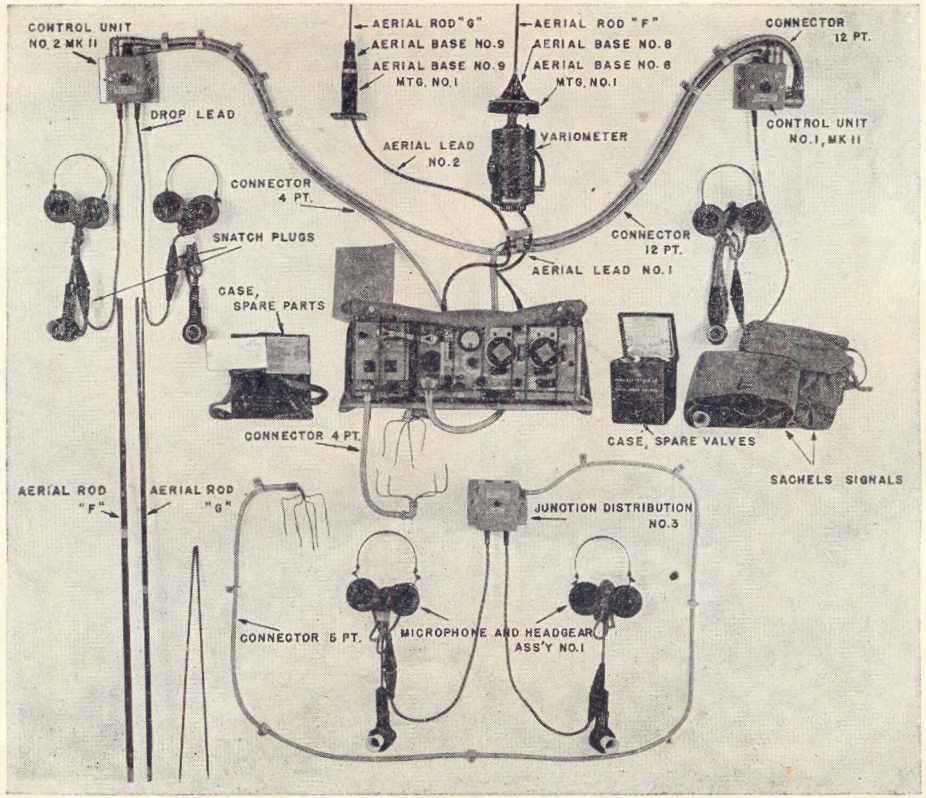

PHOTO 7—INSTALLATION EQUIPMENT FOR U. S. MEDIUM TANK M-4

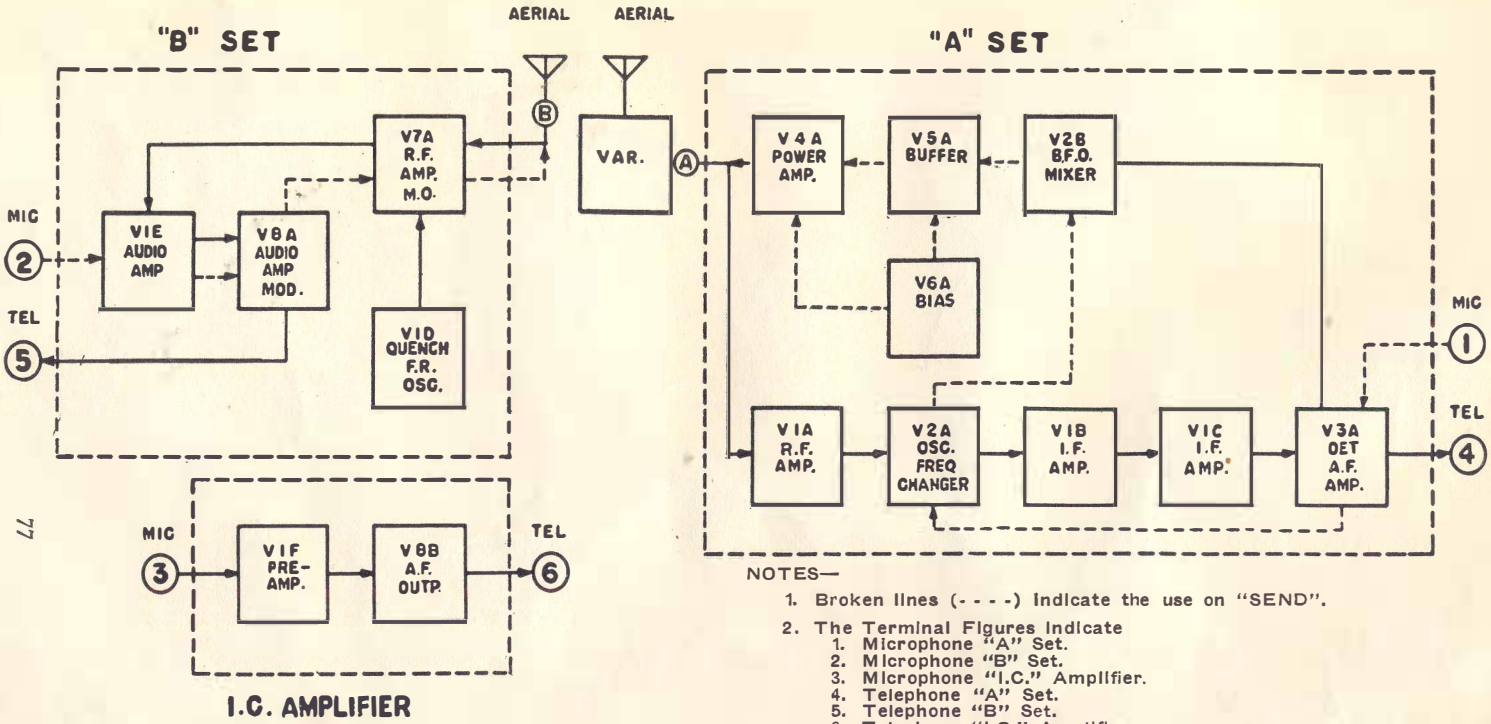

NOTES—

1. Broken lines (- - - -) indicate the use on "SEND".
2. The Terminal Figures indicate
   1. Microphone "A" Set.
   2. Microphone "B" Set.
   3. Microphone "I.C." Amplifier.
   4. Telephone "A" Set.
   5. Telephone "B" Set.
   6. Telephone "I.C." Amplifier.
3. Power Supply not shown (see Fig 4).

FIG. 1—BLOCK DIAGRAM OF SENDER RECEIVER

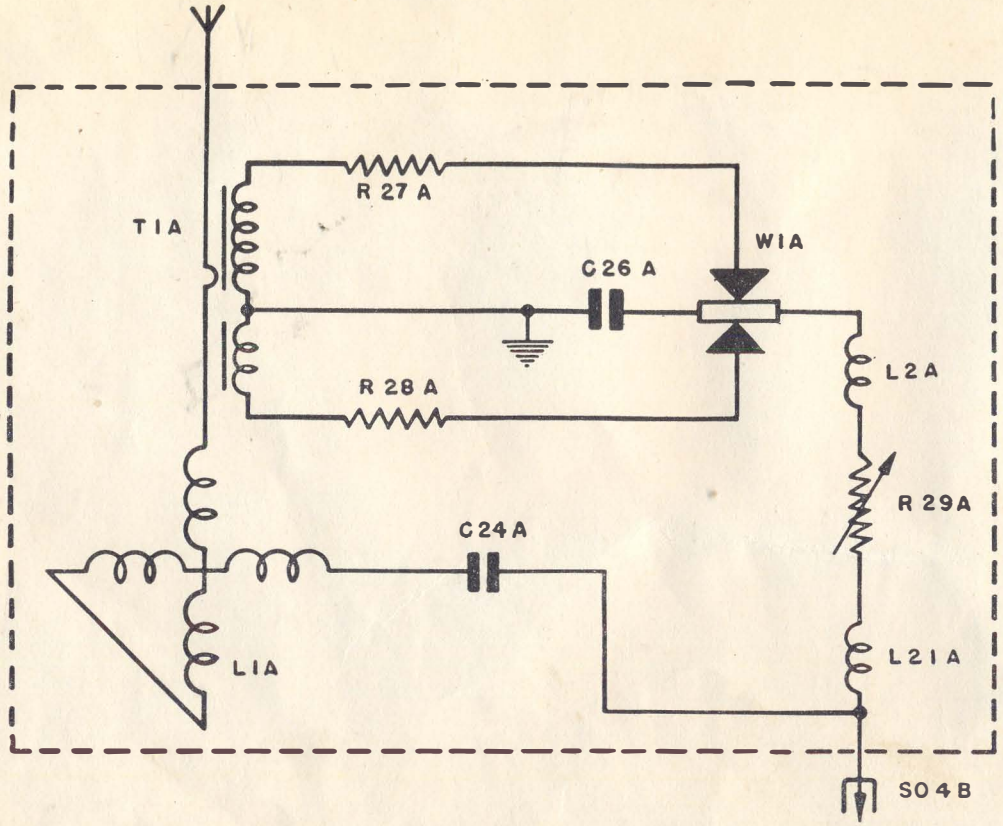

NOTES—

1. Variable Resistance R29A is used to adjust reading of Test Meter when measuring the Aerial Current (see Note in Paragraph 1.3.5).
2. On some Canadian and U. S. sets R10A is R27A, i.e., the value is 330 ohms instead of 470 ohms.

FIG. 2—SCHEMATIC OF VARIOMETER

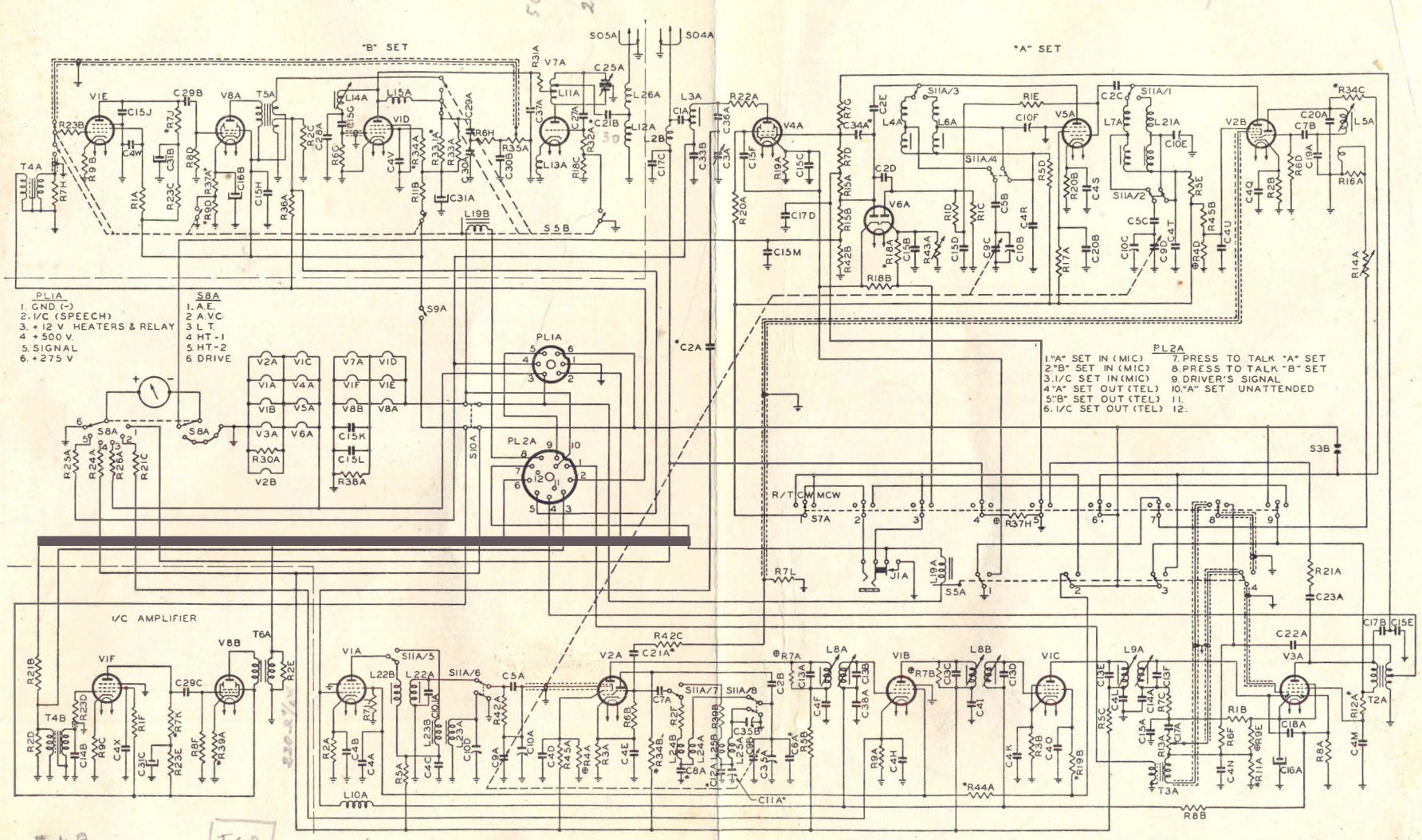

NOTES:-(1) SEE NOTES UNDER TABLE IX
(2) * RATING OR VALUE CHANGED IN SETS OF CANADIAN AND U.S. MANUFACTURE
(3) S-R RELAY SWITCHES S5A-S5B SHOWN IN "RECEIVE" POSITION
(4) R/T/CW/MCW. SWITCH S7A SHOWN IN C.W. POSITION
(5) BAND CHANGE SWITCH S11A SHOWN ON H.F. (4.5 TO 8.0 MC.) BAND

FIG. 3—COMPLETE SCHEMATIC OF WIRELESS SET NO. 19, MARK II

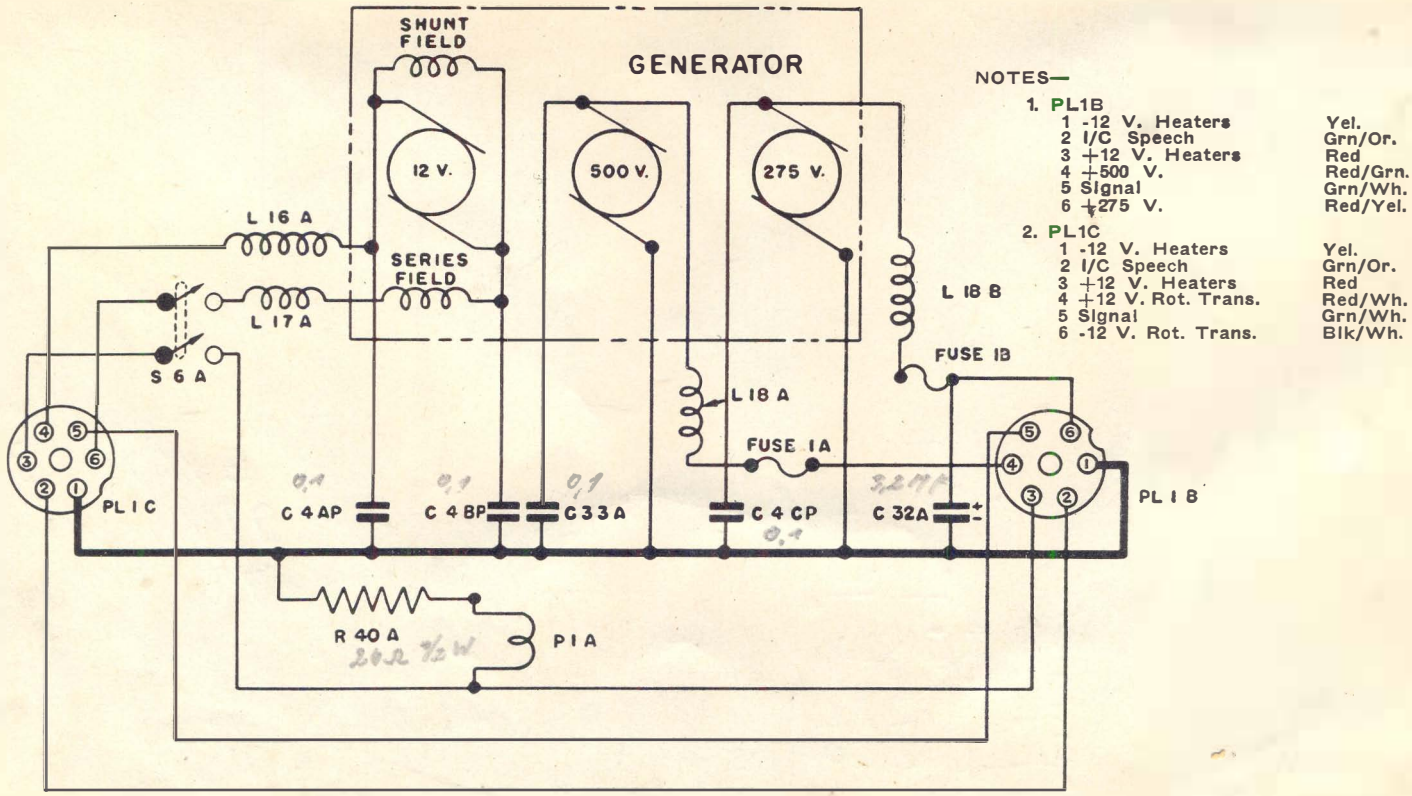

FIG. 4—SCHEMATIC OF SUPPLY UNIT

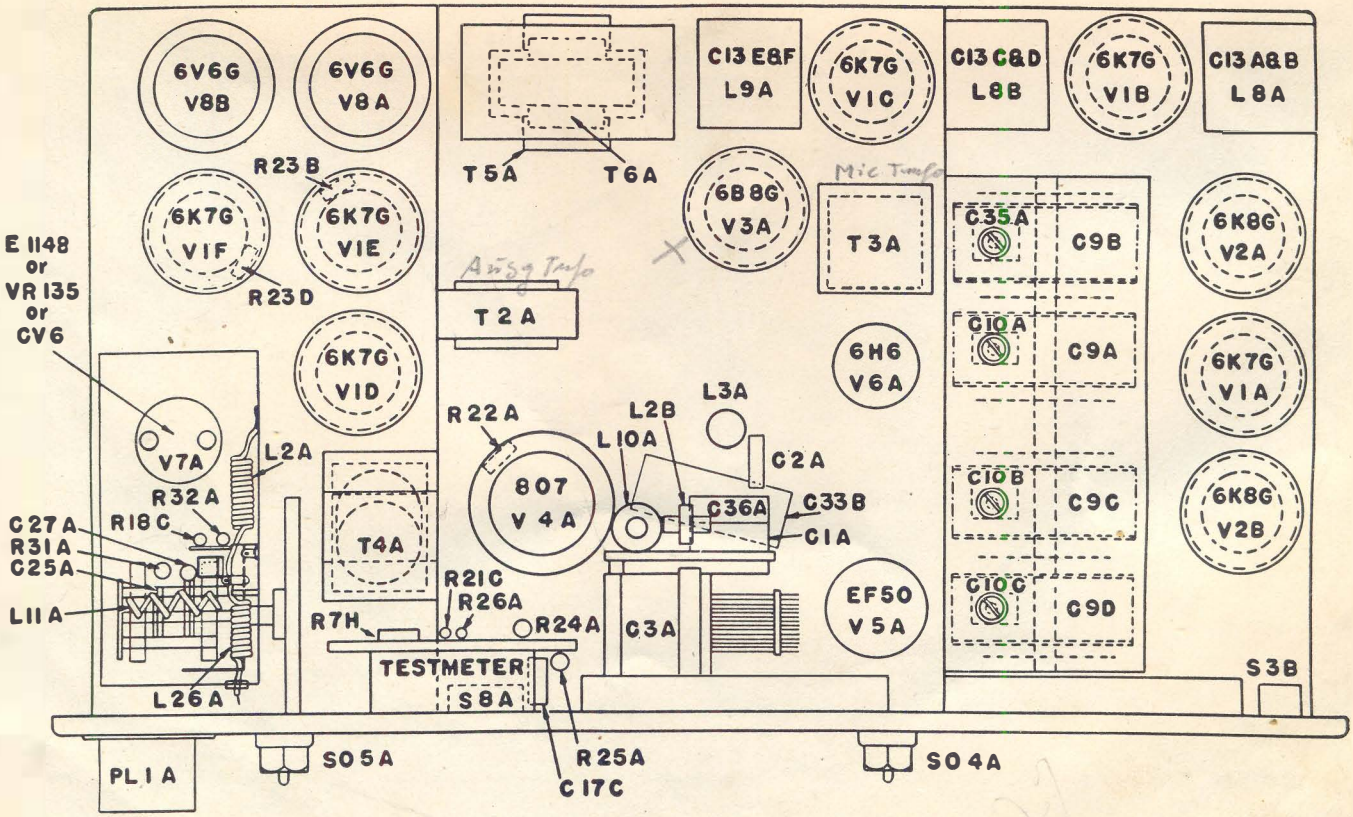

FIG. 5—TOP PLAN OF CHASSIS

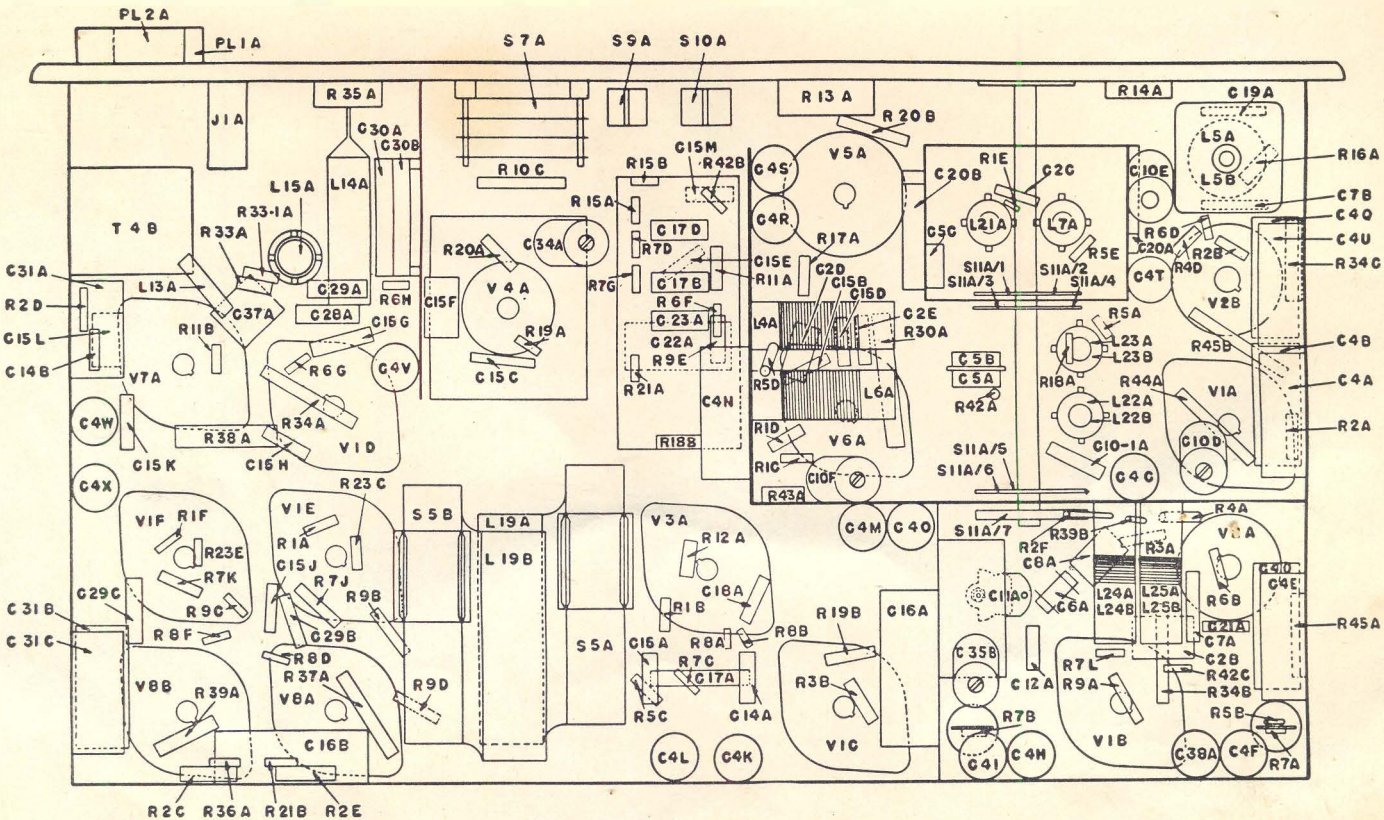

FIG. 6—UNDERNEATH PLAN OF CHASSIS

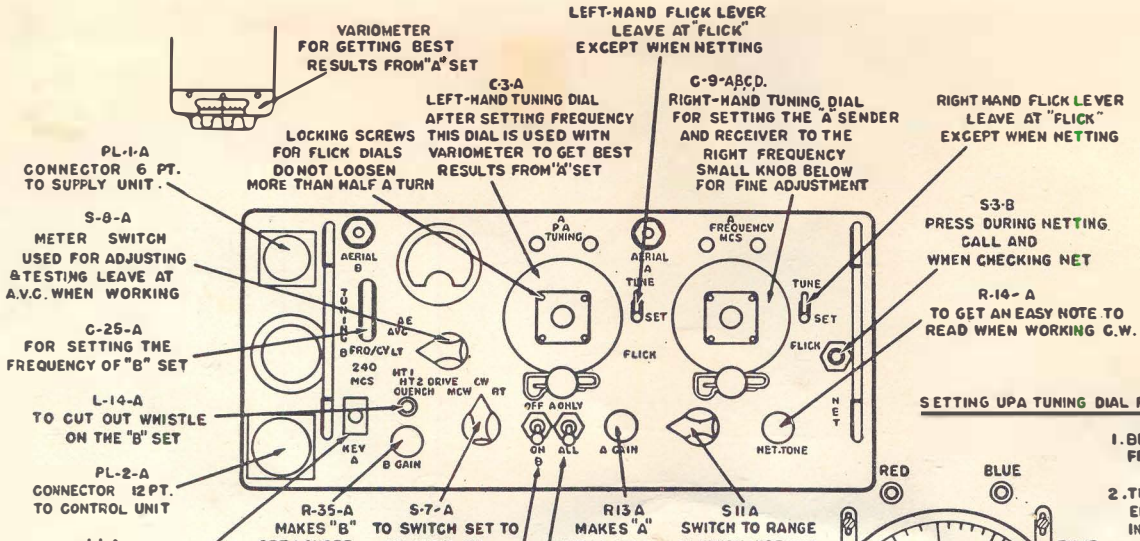

Fig. 7—Controls on Front Panel

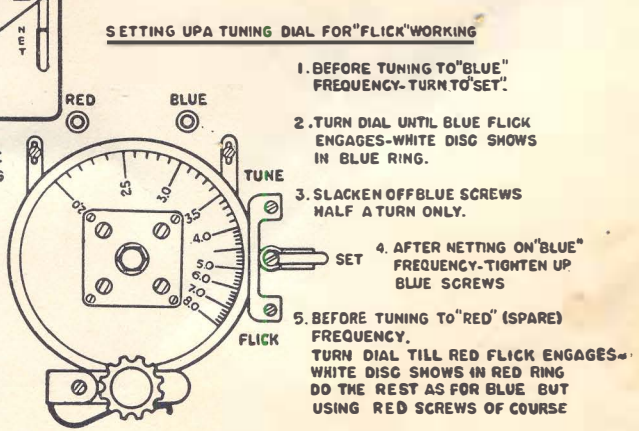

Fig. 7A—Flick Control

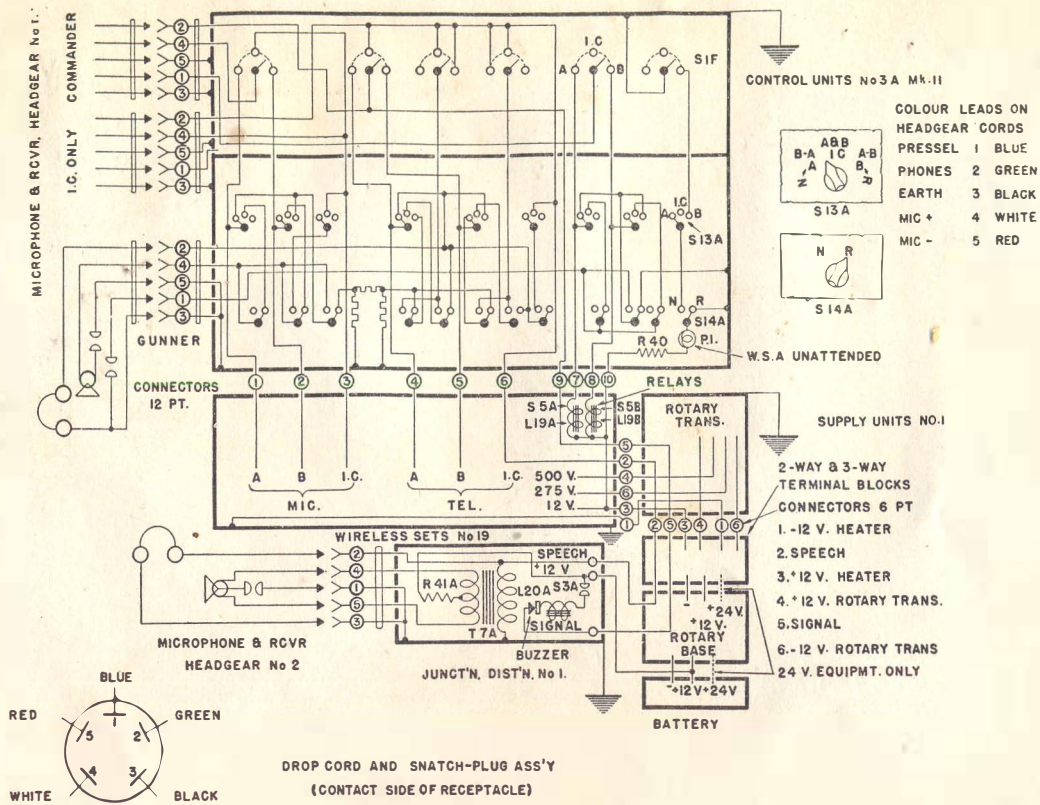

FIG. 8—WIRING LAYOUT OF A CANADIAN INFANTRY TANK MK111*** INSTALLATION

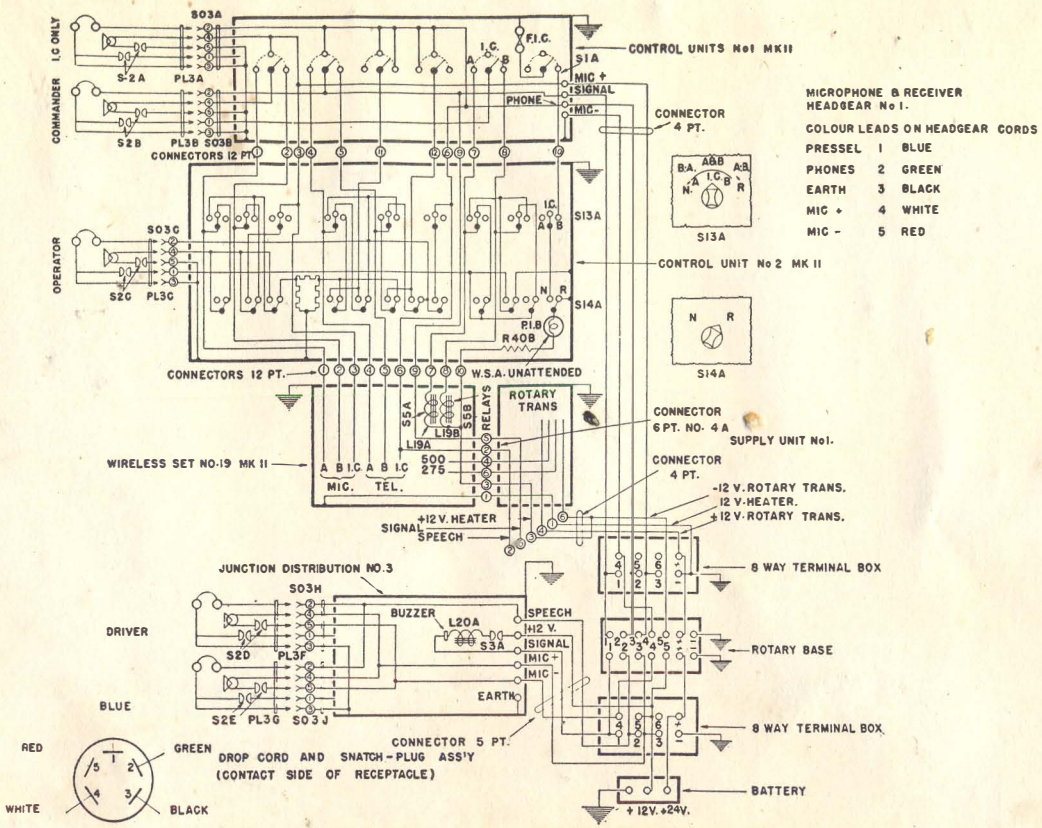

FIG. 9—WIRING LAYOUT OF A U. S. MEDIUM TANK M-4