WAR DEPARTMENT TECHNICAL MANUAL

TM 11-281

THIS MANUAL SUPERSEDES TM 11-281, 4 SEPTEMBER 1943; TB 11-281-1, 13 OCTOBER 1944; AND TB 11-281-2, 25 NOVEMBER 1944

RADIO SETS SCR-399-A AND SCR-499-A

WAR DEPARTMENT • MARCH 1945

United States Government Printing Office
Washington : 1949

WAR DEPARTMENT
Washington 25, D. C., 31 March 1945

TM 11–281, Radio Sets SCR–399–A and SCR–499–A, is published for the information and guidance of all concerned.

[AG 300.7 (8 Jan 45)]

BY ORDER OF THE SECRETARY OF WAR:

G. C. MARSHALL
Chief of Staff

OFFICIAL:
J. A. ULIO
Major General
The Adjutant General

DISTRIBUTION:

AAF (5); AGF (5); ASF (2); T of Opn (5); Dept (5); Def Comd (2); Base Comd (5); AAF Comd (2); Arm & Sv Bd (2); S Div ASF (1); Tech Sv (2); SvC (5); Area ASvC (2); WDGS Lib (5); PC&S (2); PE (2); Dep 11 (2); Gen Oversea SOS Dep (Sig Sec) (2); GH (2); M Conc C (2); Air Base Hosp (2); Gen Sv Sch (5); Sp Sv Sch (10); USMA (10); ROTC (5); Lab 11 (2); Sig AS (2); Rep Shop 11 (2); A (5); D (2); AF (2); Two (2) copies to each of the following: T/O & E 1–12; 1–27; 1–37; 1–47; 1–117; 1–127; 1–137; 1–147; 1–157S; 1–167; 1–252; 1–257; 1–267; 1–312; 1–317; 1–452T; 1–460–1S; 1–469S; 1–487; 1–487S; 1–547; 1–637; 1–637S; 1–757; 1–758; 1–759; 1–767; 1–768; 1–777S; 1–779; 1–1027; 30–47; Five (5) copies to each of the following: T/O & E 2–2; 2–22; 4–232; 4–240–1S; 5–512S; 11–7; 11–7S; 11–15; 11–18; 11–47; 11–57; 11–97; 11–107; 11–127; 11–147S; 11–157T; 11–217; 11–237; 11–247; 11–257; 11–287; 11–317; 11–338; 11–460–1S; 11–477S; 11–517; 11–537S; 11–557; 11–557T; 11–587; 11–592; 11–597; 44–7; 44–147S.

Refer to FM 21–6 for explanation of distribution formula.

CONTENTS

CHAPTER 1. GENERAL.

		Paragraph	Page
Section I.	Description.		
	General	1	3
	Radio Set SCR–399–A	2	4
	Radio Set SCR–499–A	3	5
	Technical characteristics	4	6
	List of components and packaging data	5	9
	Major components	6	12
	Radio Transmitter BC–610–E	7	14
	Speech Amplifier BC–614–E	8	14
	Junction Box JB–70–A	9	15
	Radio Receivers BC–342–( ) and BC–312–( )	10	15
	Antenna Tuning Unit BC–939–A	11	15
	Antenna system	12	15
	Power Unit PE–95–( )	13	16
	Other components	14	17
	Chest CH–120–A (main operating)	15	17
	Chest CH–121–A	16	17
	Chest CH–89–A	17	17
	Chest CH–119–A	18	18
	Chest CH–88–A	19	18
	Frequency Meter Set SCR–211–( )	20	18
	Rectifier RA–63–(*)	21	19
	Cordage	22	20
	Remote control equipment	23	23
	Batteries	24	23
	Crystals	25	24
II.	Installation.		
	Siting	26	25
	Uncrating, unpacking, and checking Radio Set SCR–399–A	27	25
	Uncrating, unpacking, and checking Radio Set SCR–499–A	28	26
	Installation of Radio Set SCR–399–A	29	29
	Installation of Radio Set SCR–499–A	30	31
	Connections and interconnections of Radio Set SCR–399–A	31	32
	Connections and interconnections of Radio Set SCR–499–A	32	32
	Installation of antennas on Radio Set SCR–399–A	33	33
	Installation of antennas on Radio Set SCR–499–A	34	34
	Installation of dry batteries	35	34
	Placing storage batteries in service	36	34
	Repacking	37	34

CHAPTER 2. OPERATING INSTRUCTIONS.

Section I.	Controls and their use.		
	General	38	37
	Transmitter controls	39	37
	Tuning unit controls	40	40
	Antenna tuning unit controls	41	40
	Junction Box JB–70–A controls	42	41
	Speech Amplifier BC–614–E controls	43	42
	Junction Box JB–60–A controls	44	43
	Rectifier RA–63–( ) controls	45	43
II.	Tuning.		
	Preliminary steps	46	44
	Tuning Radio Transmitter BC–610–E for c-w operation [master-oscillator control]	47	46
	Tuning Radio Transmitter BC–610–E for c-w operation [crystal-control]	48	51
	Tuning Radio Transmitter BC–610–E for voice operation	49	53

		Paragraph	Page
III.	Normal operation.		
	C-w operation	50	55
	Voice operation	51	56
	Changing type of emission	52	58
	Changing frequency	53	58
	Presetting tuning units	54	59
	Additional operating instructions	55	59
IV.	Remote control operation.		
	Connection of remote stations	56	60
	Remote voice operation	57	61
	Remote c-w operation	58	61
	Remote receiver operation	59	61
V.	Power source operation.		
	Operation from commercial power source	60	62
	Operation of trailer 100 feet from truck	61	62
	Operation of trailer 200 feet from truck	62	62
	Use of Power Unit PE–95–( ) to supply power to auxiliary equipment	63	62
	Operation of low-voltage power supply system	64	63
VI.	Equipment performance check list.		
	Purpose and use	65	63
	Check list	66	64
CHAPTER 3.	PREVENTIVE MAINTENANCE.		
Section I.	Preventive maintenance techniques.		
	Meaning of preventive maintenance	67	71
	Description of maintenance techniques	68	71
	Recommended lubricants	69	72
	Vacuum tubes	70	72
	Capacitors	71	73
	Resistors	72	73
	Fuses	73	73
	Bushings and insulators	74	74
	Relays	75	74
	Switches	76	74
	Coils	77	75
	Rheostats and potentiometers	78	75
	Terminal blocks	79	75
	Multiple connectors	80	75
	Cords and cables	81	76
	Meters	82	76
	Pilot lamps	83	76
	Jacks	84	76
	Dynamotors and motors	85	76
	Cabinets, chassis, and mountings	86	77
	Headsets, microphones, keys, and loudspeakers	87	77
	Couplings and control shafts	88	77
	Gears	89	77
	Antennas	90	77
	Reels	91	78
II.	Itemized preventive maintenance.		
	General	92	78
	Common materials needed	93	78
	Item 1. Exterior of Radio Sets SCR–399–A and SCR–499–A	94	78
	Item 2. Headsets, microphones, keys, and loudspeakers	95	79
	Item 3. Cords, cables, and connectors	96	79
	Item 4. Antennas	97	79
	Item 5. Accessories	98	79
	Item 6. Interior of Radio Sets SCR–399–A and SCR–499–A	99	79
	Item 7. Radio Transmitter BC–610–E	100	79
	Item 8. Antenna Tuning Unit BC–939–A	101	79
	Item 9. Speech Amplifier BC–614–E	102	79
	Item 10. Junction Box JB–70–A	103	79

		Paragraph	Page
	Item 11. Rectifier RA-63-(*)	104	80
	Item 12. Heating and ventilating system	105	80
	Item 13. Auxiliary batteries	106	80
	Preventive maintenance check list	107	80
III.	Lubrication.		
IV.	Special tools.		
	Relay and commutator tools	108	80
	Construction of special relay and commutator tools	109	81
	Safety shorting stick and jumper wires	110	81
V.	Moistureproofing and fungiproofing.		
	General	111	81
	Treatment	112	82
	Step-by-step instructions for treating Radio Transmitter BC-610-E	113	82
	Step-by-step instructions for treating Speech Amplifier BC-614-E	114	85
	Step-by-step instructions for treating Junction Box JB-70-A	115	86
	Instructions for treating Radio Receivers BC-312-( ) and BC-342-( )	116	87
CHAPTER 4.	AUXILIARY EQUIPMENT.		
Section I.	Frequency Conversion Kit MC-509.		
	Description	117	91
	Installation on Antenna Tuning Unit BC-939-A	118	91
	Erection and installation of antenna mast	119	92
	Modification of Radio Transmitter BC-610-E	120	93
	Operation of Radio Sets SCR-399-A and SCR-499-A in frequency range of 1.0 to 2.0 mc	121	93
	Theory of equipment	122	94
II.	Doublet antenna.		
	Purpose	123	95
	Description	124	95
	Location and erection of mast	125	95
	Installation in Radio Transmitter BC-610-E	126	99
	Maintenance	127	101
	Differences in coil units	128	102
	Theory of equipment	129	102
CHAPTER 5.	REPAIR INSTRUCTIONS.		
Section I.	Simplified block diagrams.		
	Radio Transmitter BC-610-E, c-w operation	130	105
	Speech Amplifier BC-614-E	131	106
	Radio Transmitter BC-610-E and Speech Amplifier BC-614-E [phone operation]	132	106
II.	Theory of Radio Transmitter BC-610-E.		
	Oscillator stage	133	106
	Crystal control of master oscillator	134	109
	Buffer-doubler stage	135	110
	Intermediate power-amplifier stage	136	111
	Power-amplifier stage	137	111
	Antenna tuning unit	138	112
	Modulator section	139	114
	Power supplies	140	115
	Switches	141	117
	Relays	142	121
	Controls and meters	143	122
III.	Theory of Speech Amplifier BC-614-E.		
	First a-f amplifier	144	123
	Second a-f amplifier	145	123
	Third a-f amplifier and phase inverter	146	124
	Fourth a-f amplifier	147	126
	Modulation limiter	148	126
	C-w sidetone	149	127
	Power supply	150	128
	Jacks, controls, and meters	151	128

		Paragraph	Page
IV.	Theory of Junction Box JB–70–A.		
	Transmitter control switch SW_{203}	152	129
	REMOTE CONTROL EE–8 switch SW_{202}	153	130
	Relay RY_{200}	154	131
	Receiver disabling switches SW_{200} and SW_{201}	155	132
	Receiver output switch SW_{204}	156	133
	C.W. SIDETONE switch SW_{205}	157	133
	START-STOP switch SW_{206}	158	133
	Battery source switch SW_{207}	159	134
	Circuit breaker CB_{200}	160	134
	Surge filters	161	134
V.	Over-all system function.		
	General	162	135
	C-w operation	163	135
	Phone operation	164	140
	Remote operation	165	140
	Rectifier RA–68–(*)	166	140
VI.	Changes in equipment.		
	Changes in Radio Transmitter BC–610–E	167	142
	Changes in Speech Amplifier BC–614–E	168	143
	Wiring change in Junction Box JB–70–A	169	143
	Change in coupling coils for doublet antenna kit	170	144
VII.	Trouble shooting.		
	General trouble-shooting information	171	144
	Voltage measurements	172	145
	Resistance measurements	173	146
	Capacitor tests	174	147
	Current measurements	175	147
	Tube checking	176	148
	Analyzer BC–1052–E	177	148
	Trouble-shooting procedures	178	149
	Trouble-shooting charts	179	149
	Sectionalizing trouble in Radio Sets SCR–399–A and SCR–499–A	180	151
	Localizing trouble in Radio Transmitter BC–610–E	181	152
	Localizing trouble in Junction Box JB–70–A	182	153
	Localizing trouble in Speech Amplifier BC–614–E	183	154
VIII.	Repairs.		
	Replacement of parts	184	154
	Replacement of tubes	185	154
	Removal of Antenna Tuning Unit BC–939–A	186	155
	Removal of top of transmitter cabinet	187	155
	Removal of r-f section	188	155
	Removal of chests from shelter	189	155
	Removal of Radio Transmitter BC–610–E	190	156
	Replacement of switches in Radio Transmitter BC–610–E	191	156
	Replacement of parts in Speech Amplifier BC–614–E	192	156
	Removal of Junction Box JB–70–A	193	156
	Rustproofing and repainting	194	156
	War Department Unsatisfactory Equipment Report	195	157
IX.	Alignment and adjustment.		
	Neutralization	196	157
	Modulation limiter	197	157
APPENDIX I.	MAINTENANCE PARTS LIST		182
II.	REFERENCES		183

LIST OF TABLES

	Table	Page
Chests and contents	I	25
Typical packing list for Radio Set SCR–499–A	II	28
Tuning components	III	51
Tuning ranges for long wire antennas when used with Antenna Tuning Unit BC–939–A	IV	51
Crystals and operating frequencies	V	52
Approximate dial settings using Antenna Tuning Unit BC–939–A	VI	93
List of components in doublet antenna kit	VII	96
Continuity checks for cables and terminal strips	VIII	186
Data for checking transformers, chokes, and inductors	IX	192
Performance characteristics	X	194
Characteristics of vacuum tubes	XI	194

DESTRUCTION NOTICE

WHY — To prevent the enemy from using or salvaging this equipment for his benefit.

WHEN — When ordered by your commander.

HOW — 1. Smash — Use sledges, axes, handaxes, pickaxes, hammers, crowbars, heavy tools.

2. Cut — Use axes, handaxes, machetes.

3. Burn — Use gasoline, kerosene, oil, flame throwers, incendiary grenades.

4. Explosives — Use firearms, grenades, TNT.

5. Disposal — Bury in slit trenches, fox holes, other holes. Throw in streams. Scatter.

USE ANYTHING IMMEDIATELY AVAILABLE FOR DESTRUCTION OF THIS EQUIPMENT

WHAT — 1. Smash — Crystals, meters, plugs, tubes, tuning controls, capacitors, resistors, sockets, insulators, microphones, headsets, relays, gas engine, and generator.

2. Cut — Cords, wiring, and cables.

3. Burn — Circuit labels, technical manuals, all papers, cords, wiring, cables, capacitors, resistors, and nameplates.

4. Bend — Antenna sections, panels, mounting, and nameplates.

5. Bury or scatter — All of the above pieces after breaking and burning.

DESTROY EVERYTHING

SAFETY NOTICE

Voltages as high as 2,600 volts are used in the operation of this equipment. These voltages are dangerous to life.

Do not change tubes or make adjustments inside the set with the high voltage supply ON.

All panels giving access to voltages above 450 volts are provided with interlocks to shut off the dynamotor when opened. A few service checks must be made inside the set with the high voltage on. When making these checks, always have the immediate presence and assistance of another person capable of rendering aid. Keep one hand in your pocket while making high voltage measurements. This will prevent touching the electrical circuit with more than one part of the body at one time.

Be sure that high-voltage plate circuits are dead before performing preventive maintenance on this equipment. High-voltage capacitors in power supplies must be discharged manually before performing preventive maintenance operations.

Servicing should be done with the vehicular battery circuit open. Shorting this battery circuit will cause a flash and severe burns unless the power is turned off.

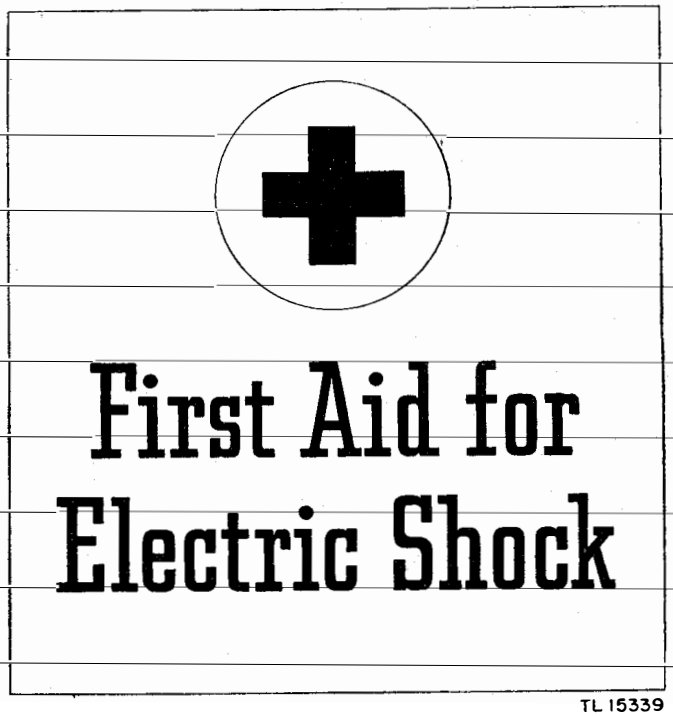

TL 15339

Radio-frequency voltages as high as 25,000 volts may develop on the antenna of this radio set. Do not touch the antenna while the set is turned on.

Do not add gasoline to the vehicle fuel tank when the transmitter is on. Radio-frequency voltage may cause a spark resulting in an explosion. Turn off the radio transmitter and KEEP it off until refueling is finished.

Do not add gasoline to the vehicle fuel tank when the transmitter is on. Radio-frequency voltage present on the chassis of the vehicle may cause a spark resulting in an explosion. Turn off the radio transmitter and KEEP it off until refueling is finished.

FIRST AID FOR ELECTRIC SHOCK

1. Rescue

In case of electric shock, shut off the high voltage at once and ground the circuits. If the high voltage cannot be turned off without delay, free the victim from contact with the live conductor as promptly as possible. Avoid direct contact with either the live conductor or the victim's body. Use a dry board, dry clothing, or other nonconductor to free the victim. An ax may be used to cut the high-voltage wire. Use extreme caution to avoid the resulting electric flash.

2. Symptoms

a. Breathing stops abruptly in electric shock if the current passes through the breathing center at the base of the brain. If the shock has not been too severe, the breathing center recovers after a while and normal breathing is resumed, provided that a sufficient supply of air has been furnished meanwhile by artificial respiration.

b. The victim is usually very white or blue. The pulse is very weak or entirely absent, and unconsciousness is complete. Burns are usually present. The victim's body may become rigid or stiff in a very few minutes. This condition is due to the action of electricity and is not to be considered rigor mortis. Artificial respiration must still be given, as several such cases are reported to have recovered. The ordinary and general tests for death should never be accepted.

3. Treatment

a. Start artificial respiration immediately. At the same time send for a medical officer, if assistance is available. Do not leave the victim unattended. Perform artificial respiration at the scene of the accident, unless the victim's or operator's life is endangered from such action. *In this case only,* remove the victim to another location, but no farther than is necessary for safety. If the new location is more than a few feet away, artificial respiration should be given while the victim is being moved. If the method of transportation prohibits the use of the Shaeffer prone pressure method, other methods of resuscitation may be used. Pressure may be exerted on the front of the victim's diaphragm, or the direct mouth to mouth method may be used. Artificial respiration, once started, must be continued, without loss of rhythm.

b. Lay the victim in a prone position, one arm extended directly overhead, and the other arm bent at the elbow so that the back of the

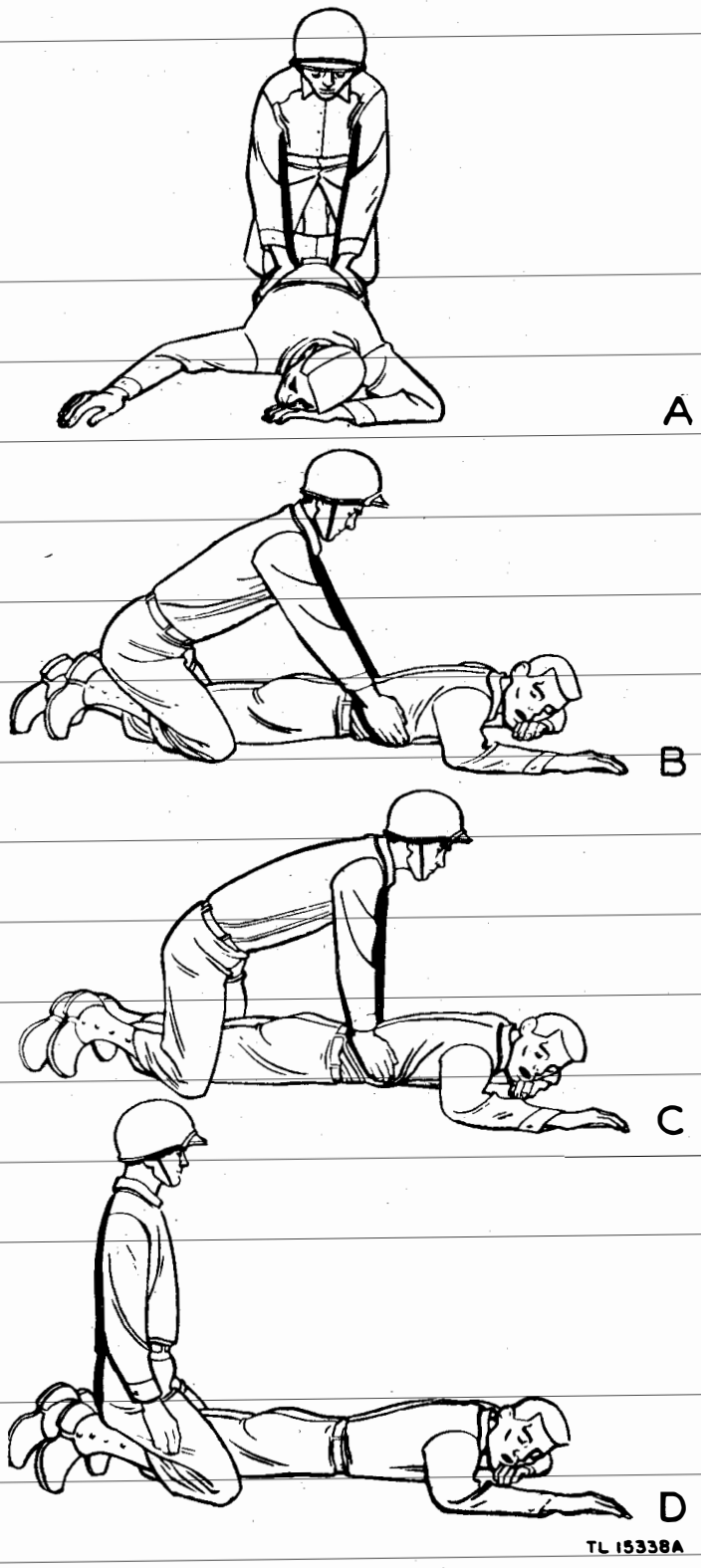

hand supports the head. The face should be turned away from the bent elbow so that the nose and mouth are free for breathing, as shown in *A* and *B*.

c. Open the victim's mouth and remove any foreign bodies, such as false teeth, chewing gum, or tobacco. The mouth should remain open, with the tongue extended. Do not permit the victim to draw his tongue back into his mouth or throat.

d. If an assistant is available during resuscitation, he should loosen any tight clothing to permit free circulation of blood and to prevent restriction of breathing. He should see that the victim is kept warm, by applying blankets or other covering, or by applying hot rocks or bricks wrapped in cloth or paper to prevent injury to the victim. The assistant should also be ever watchful to see that the victim does not swallow his tongue. He should continually wipe from the victim's mouth any frothy mucus or saliva that may collect and interfere with respiration.

e. The resuscitating operator should straddle the victim's thighs, or one leg, in such a manner that the—

(1) Operator's arms and thighs will be vertical while applying pressure on the small of the victim's back (*C*).

(2) Operator's fingers are in a natural position on the victim's back with the little finger lying on the last rib.

(3) Heels of the hands rest on either side of the spine as far apart as convenient without allowing the hands to slip off the victim (*A*).

(4) Operator's elbows are straight and locked.

f. The resuscitation procedure is as follows:

(1) Exert downward pressure, not exceeding 60 pounds, for 1 second.

(2) Swing back, suddenly releasing pressure, and sit on the heels (*D*).

(3) After 2 seconds' rest, swing forward again positioning the hands, and apply pressure for another second (*B* and *C*).

g. The forward swing, positioning of the hands, and the downward pressure should be accomplished in one continuous motion, which requires 1 second. The release and backward swing require 1 second. The addition of the 2-second rest makes a total of 4 seconds for a complete cycle. Until the operator is thoroughly familiar with the correct cadence of the cycle, he should count the seconds aloud, speaking distinctly and counting evenly in thousands. Example: one thousand and one, one thousand and two, etc.

h. Artificial respiration should be continued until the victim regains normal breathing, or is pronounced dead by a medical officer. Since it may be necessary to continue resuscitation for several hours, relief operators should be used if available.

4. Relieving Operator

The relief operator kneels beside the operator and follows him through several complete cycles. When the relief operator is sure that he has the correct rhythm, he places his hands on the operator's hands without applying pressure. This indicates to the operator that he is ready to take over. On the backward swing, the operator moves and the relief operator takes his position. The relieved operator follows through several complete cycles to be sure that the new operator has the correct rhythm. He remains alert to take over instantly if the new operator falters or hesitates on the cycle.

5. Stimulants

a. If an inhalant stimulant is used, such as aromatic spirits of ammonia, the individual administering the stimulant should first test it himself to see how close he can hold the inhalant to his own nostrils for comfortable breathing. Be sure that the inhalant is not held any closer to the victim's nostrils, and then for only 1 or 2 seconds every minute.

b. After the victim has regained consciousness, he may be given hot coffee, hot tea, or a glass of water containing ½ teaspoon of aromatic spirits of ammonia. DO NOT GIVE ANY LIQUIDS TO AN UNCONSCIOUS VICTIM.

Cautions: 1. After the victim revives, keep him *lying quietly*. Any injury a person may have received may cause a condition of shock. Shock is present if the victim is pale and has a cold sweat, his pulse is weak and rapid, and his breathing is short and gasping.

2. Keep the victim lying flat on his back, with

his head lower than the rest of his body and his hips elevated. Be sure that there is no tight clothing to restrict the free circulation of blood or hinder natural breathing. Keep him warm and quiet.

3. A resuscitated victim must be watched carefully as he may suddenly stop breathing. NEVER LEAVE A RESUSCITATED PERSON ALONE UNTIL IT IS *CERTAIN* THAT HE IS FULLY CONSCIOUS AND BREATHING NORMALLY.

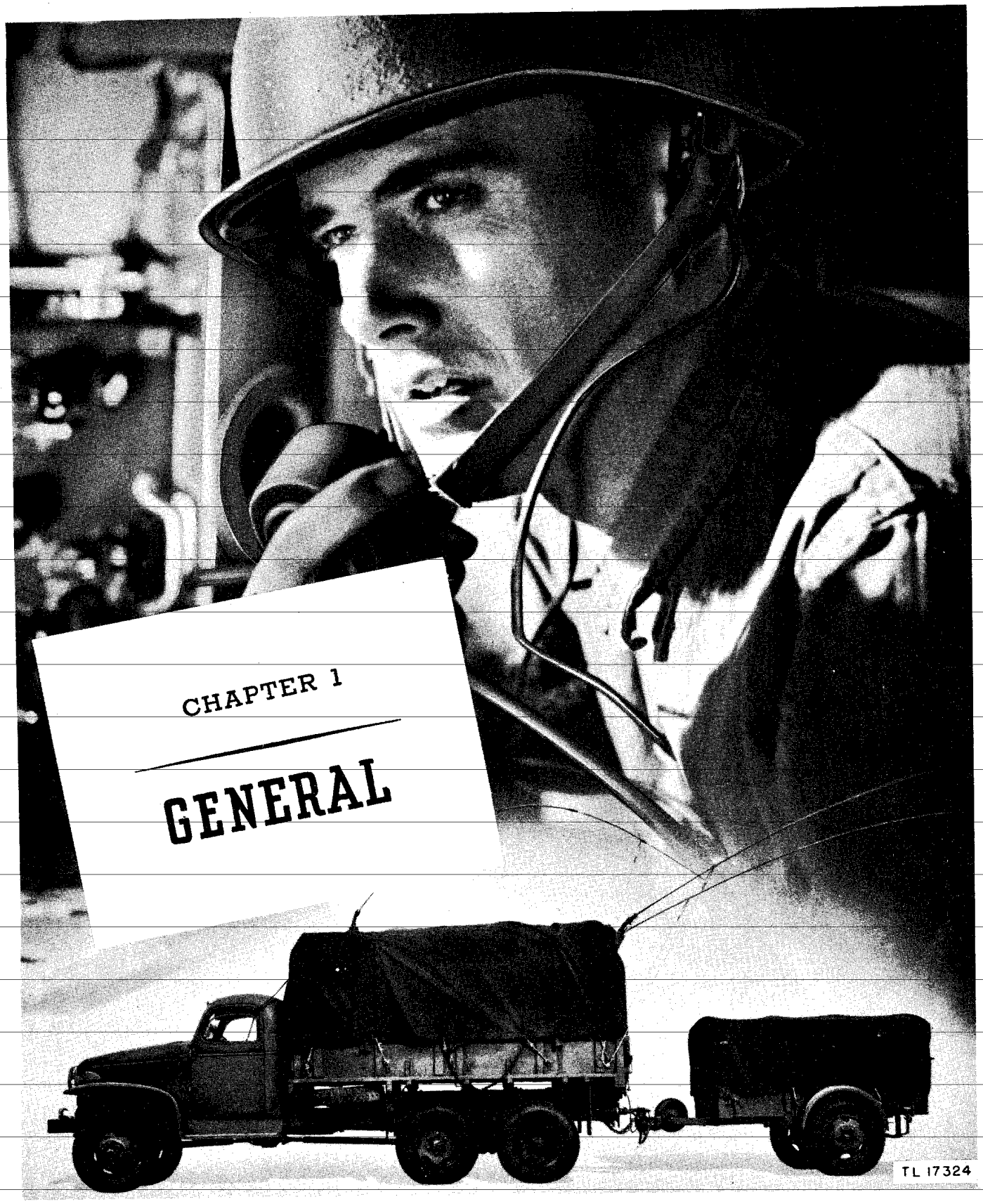

CHAPTER 1

GENERAL

This manual supersedes TM 11-281, 4 September 1943; TB 11-281-1, 13 October 1944, and TB 11-281-2, 25 November 1944.

CHAPTER I

GENERAL

Section I. DESCRIPTION

1. General

a. This manual covers Radio Sets SCR-399-A and SCR-499-A. There are no differences in the operating components and power sources of the two sets, but Radio Set SCR-399-A is usually installed as a mobile station (fig. 1) and Radio Set SCR-499-A is ordinarily set up as a fixed station (fig. 2). To facilitate its use as a mobile station, Radio Set SCR-399-A is shipped with the operating components and the power source installed in Shelter HO-17-A and Trailer K-52-( ), respectively. A shelter and trailer are not provided with Radio Set SCR-499-A, since it is not intended for mobile use. Its components are shipped in 23 boxes from which they can be unpacked and set up as a fixed station at any suitable site.

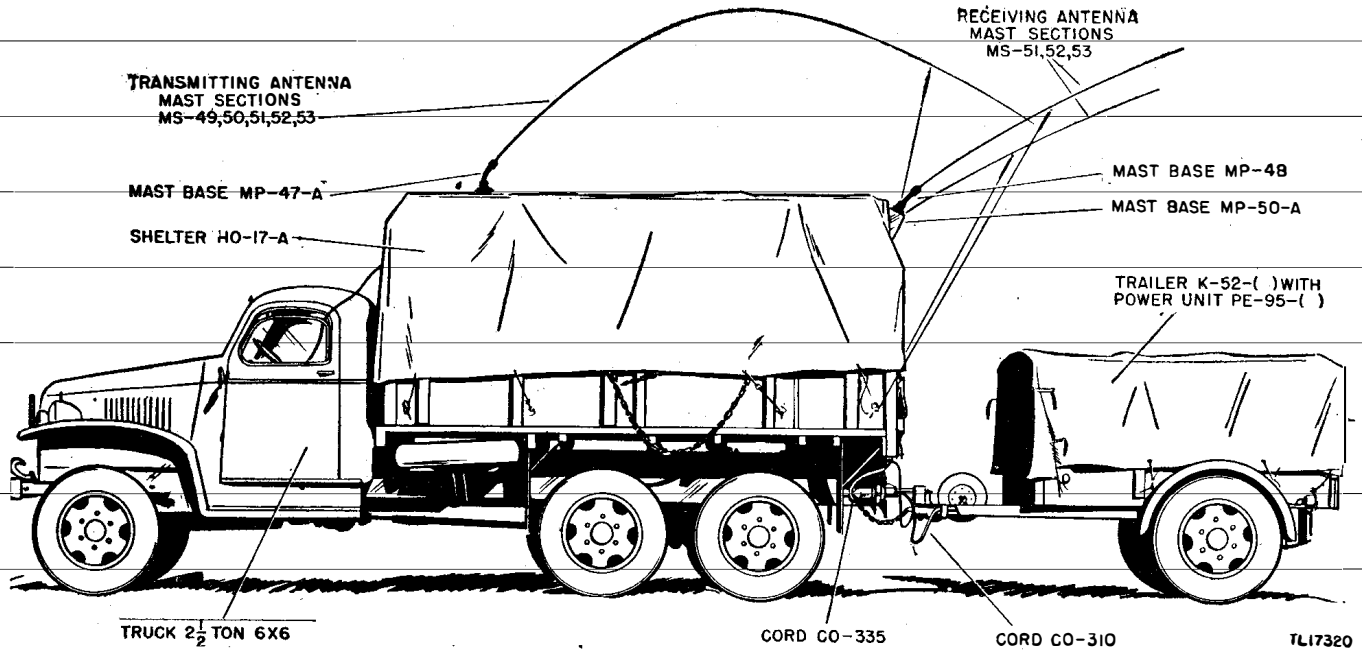

Figure 1. Radio Set SCR-399-A installed as a mobile station.

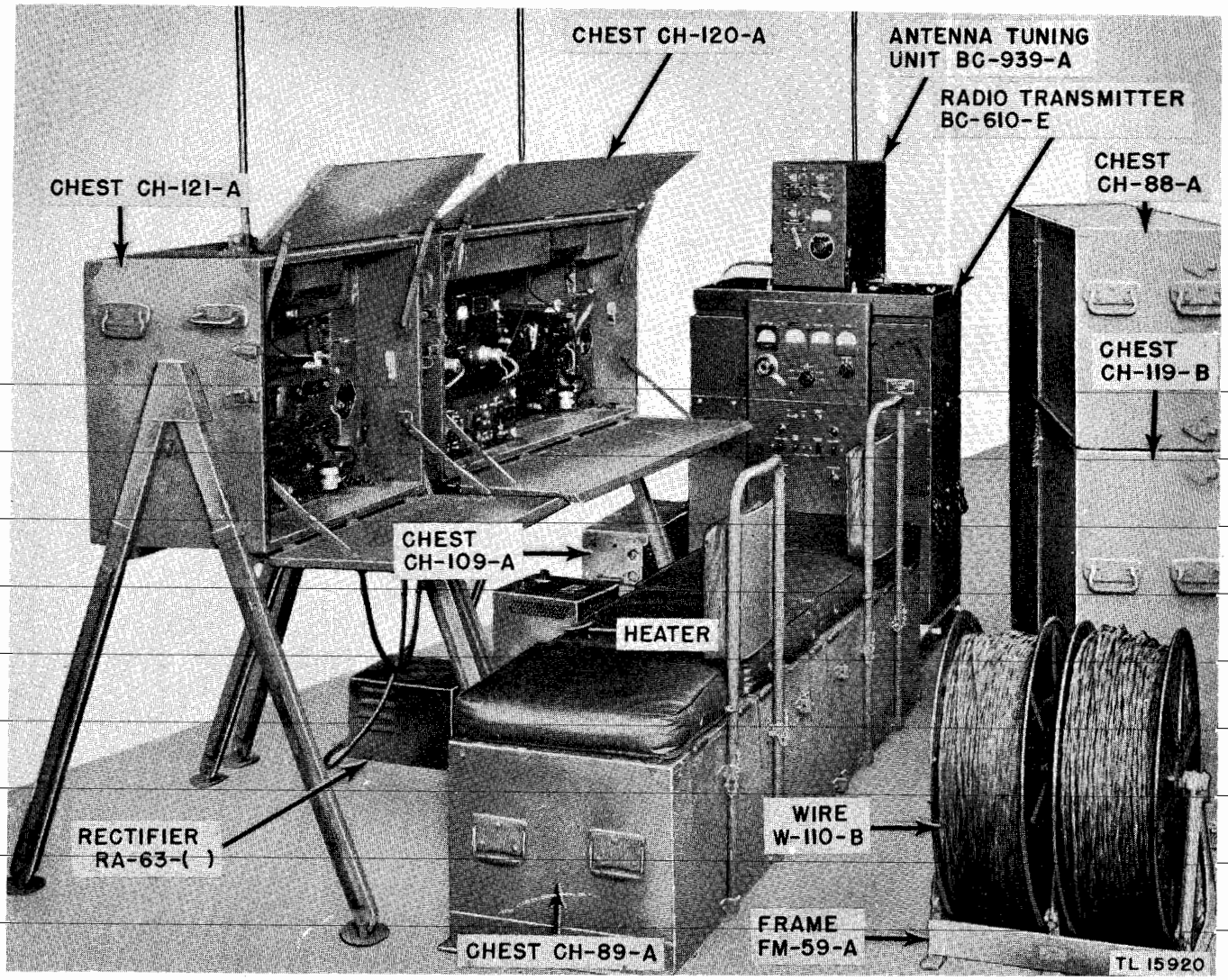

Figure 2. Radio Set SCR-499-A, operating and accessory components arranged as a fixed station.

b. The following Technical Manuals are issued with the radio sets and contain detailed information on the various components as listed below:

TM 11-333, Telephone EE-8-( ).
TM 11-850, Radio Receivers BC-312-( ), BC-314-( ), BC-342-( ), and BC-344-( ).
TM 11-904, Power Unit PE-95-( ).
TM 11-300, Frequency Meter Set SCR-211-( ).
Parts List for Shelter HO-17-A.

c. Trailer K-52-( ) and Power Unit PE-95-( ), used with Radio Set SCR-399-A, are also supplied with Radio Sets SCR-299-C and -D.

d. Official nomenclature followed by ( ) is used in this manual to indicate reference to all models of the item of equipment. Official nomenclature followed by (*) refers to all models included in one Technical Manual. Therefore, Rectifier RA-63-(*) refers to Rectifiers RA-63-A and -C, treated together in this manual.

2. Radio Set SCR-399-A

Radio Set SCR-399-A is a relatively high-power radio communications station. Under all conditions of atmosphere and terrain, the radio set will provide voice or c-w (continuous-wave) communication over a range of more than 100 miles from a stationary position, or while moving at high speed. For mobile use, Shelter HO-17-A should be mounted on a 2½-ton, 6 x 6, cargo truck. (See fig. 1.) Two seats in the truck cab carry the driver and his alternate. In the shelter (fig. 3), two operators may sit at the radio station operating positions. Power Unit PE-95-( ) may be started and stopped by remote control or at the trailer. The transmitting

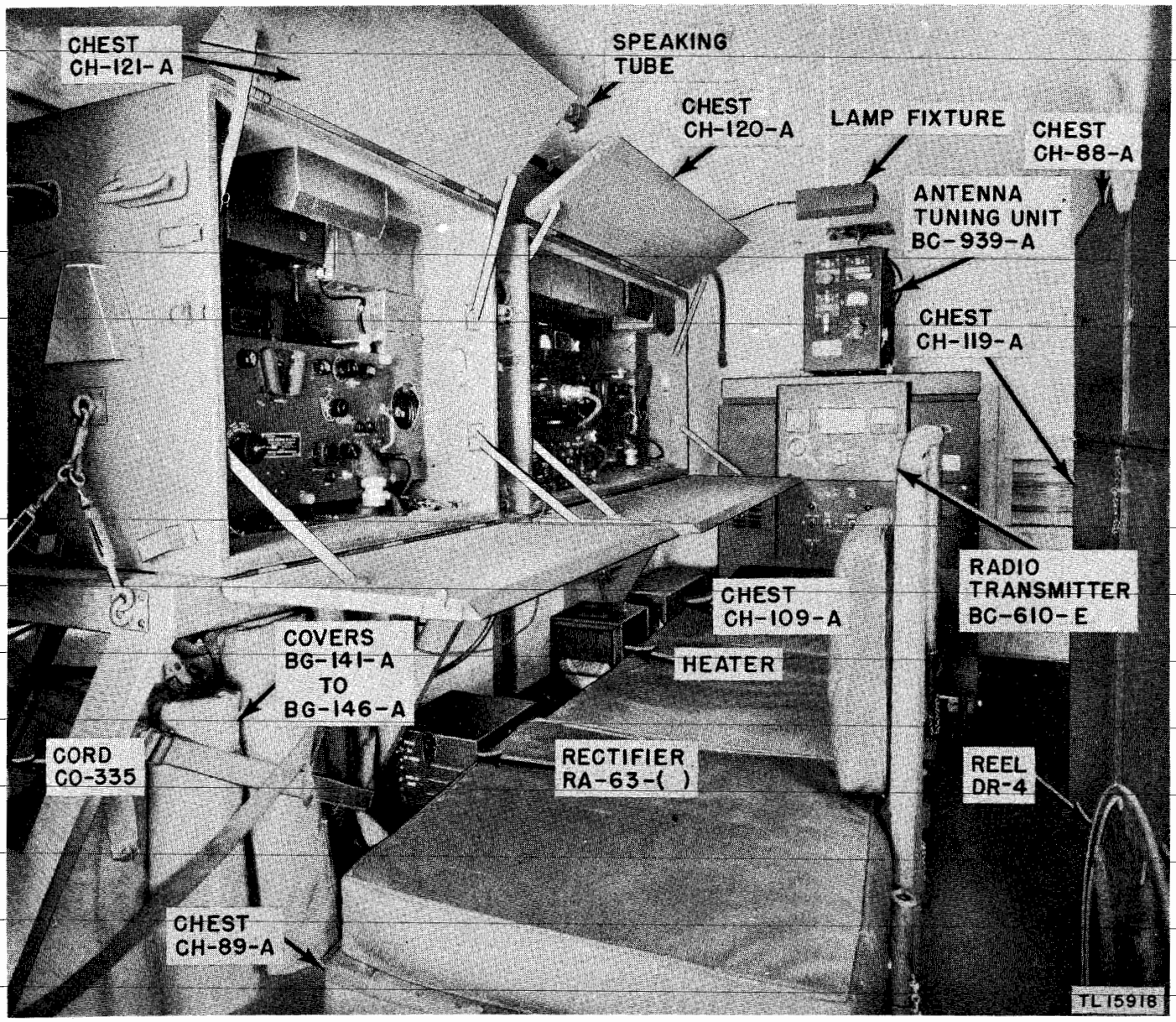

Figure 3. Radio Set SCR-399-A installed in Shelter HO-17-A.

and receiving controls, tuning units, coils, crystals, and spare parts are all within reach of the operating positions. In cold weather, an electric heater maintains moderate temperature within the shelter. In warm weather, the motor-driven heater fan and a ventilating blower provide adequate air circulation. (See fig. 4.) Chest CH-89-A (seat bench) has a 4-inch cushion on each of the four lids covering its spare parts compartments, and provides sleeping quarters for one person. An additional shelter and sleeping quarters can be made with the wooden frame and tarpaulin from the trailer.

3. Radio Set SCR-499-A

The components of Radio Set SCR-499-A are the same as those of Radio Set SCR-399-A, except that a shelter and trailer are not provided. The components can be quickly assembled and set up as a field station in a tent, a shelter, or in the open. The installed radio set can be easily dismantled into a number of component parts, each of which is small enough for air transportation to a new site. Canvas covers are issued to provide protection for components while they are in transit, as well as to protect them if the station is set up in the open.

812293 O—49——2

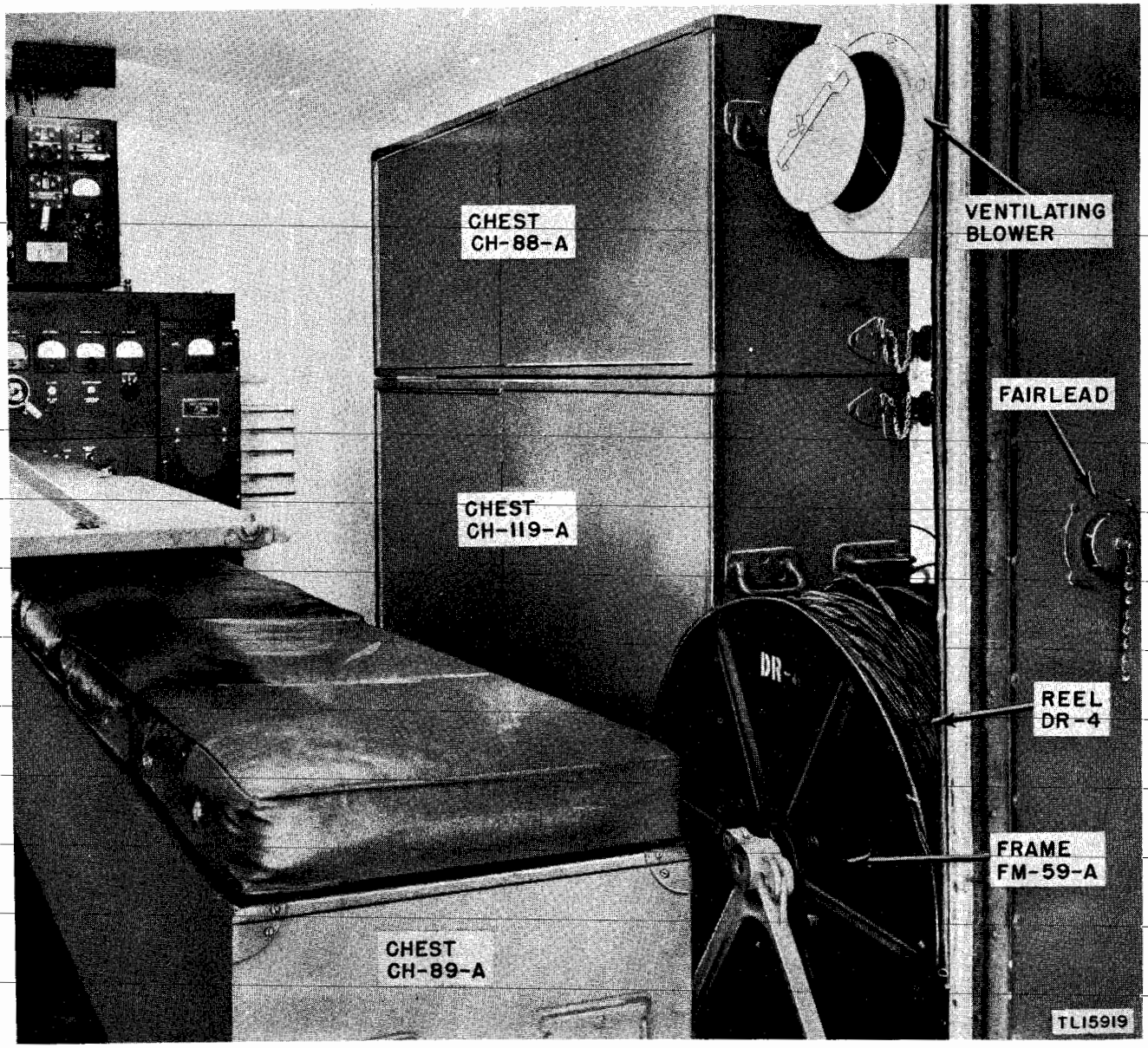

Figure 4. Shelter HO-17-A—interior view of right (or curb) side.

4. Technical Characteristics

a. RADIO TRANSMITTER BC-610-E (fig. 5).

Frequency range:[1]

Three channels (1, 2, and 3) ..... 2 mc to 18 mc
Circuit ..... master oscillator-power amplifier (mopa)
Types of signals transmitted ..... c-w and voice

Distance range:[2]

C-w: Stationary ..... 250 mi
Moving ..... 250 mi
Voice: Stationary ..... 100 mi
Moving ..... 100 mi
Type of modulation ..... amplitude
Number of tubes 16

[1]Refer to the frequency spectrum chart, figure 6.
[2]Use the best operating frequency for the time of day and season of year.

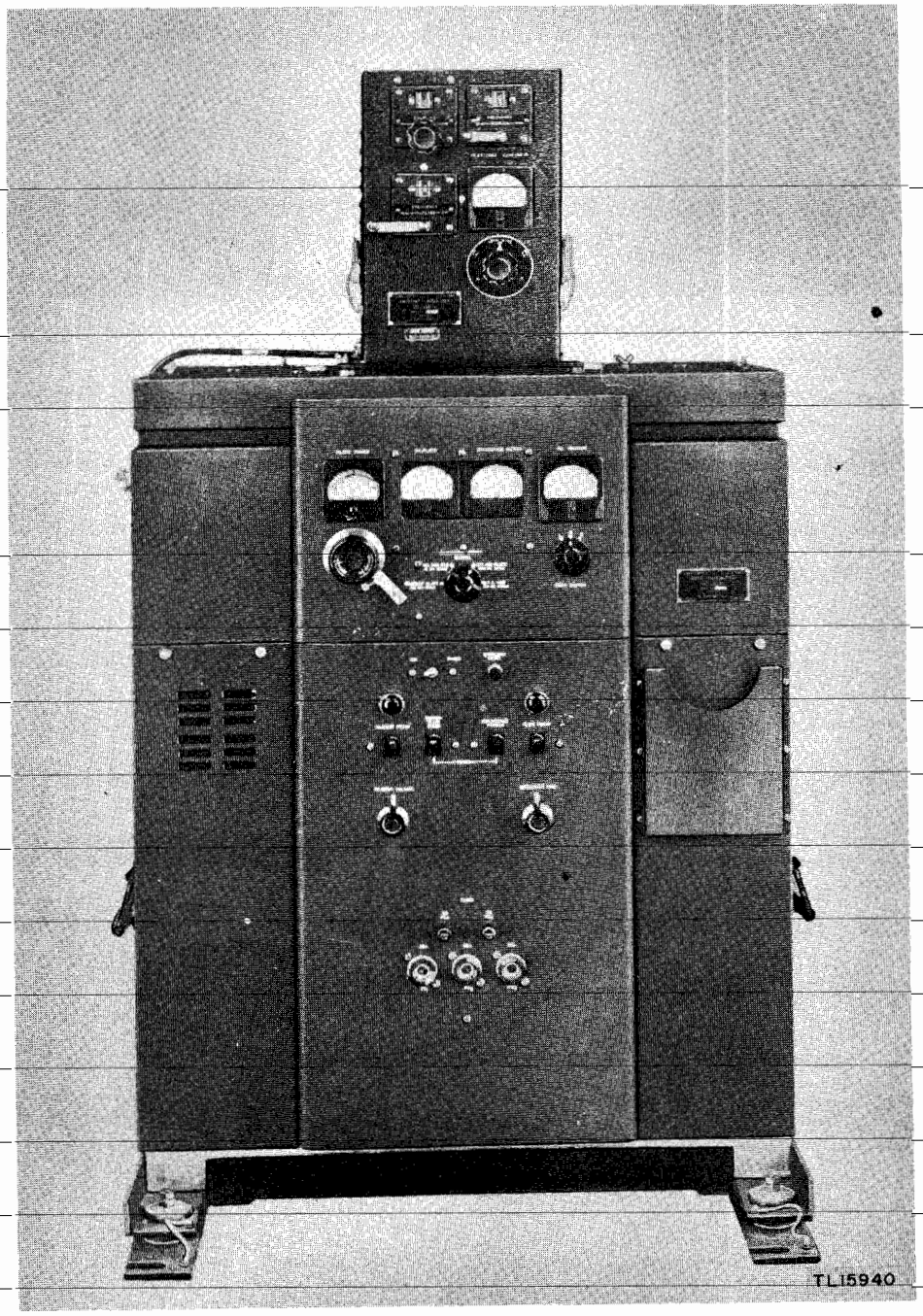

Figure 5. Radio Transmitter BC-610-E with Antenna Tuning Unit BC-939-A in position.

Antennas:

Whip antenna	15 ft long. Consists of Mast Sections MS-49 to MS-53, inclusive
Extended whip antenna	25 ft long. Add 1 or 2 Mast Sections MS-54 to Mast Section MS-53
Straight wire antenna	25-100 ft long
Doublet antenna	kit

Power output:

C-w operation	400 watts (approx)
Voice operation	300 watts (approx)

Power input:
115-volt, 50/60-cycle ac ..... 1,700-2,000 watts
Power source ..... PE–95–( ) or commercial
Weight ..... 401 lb

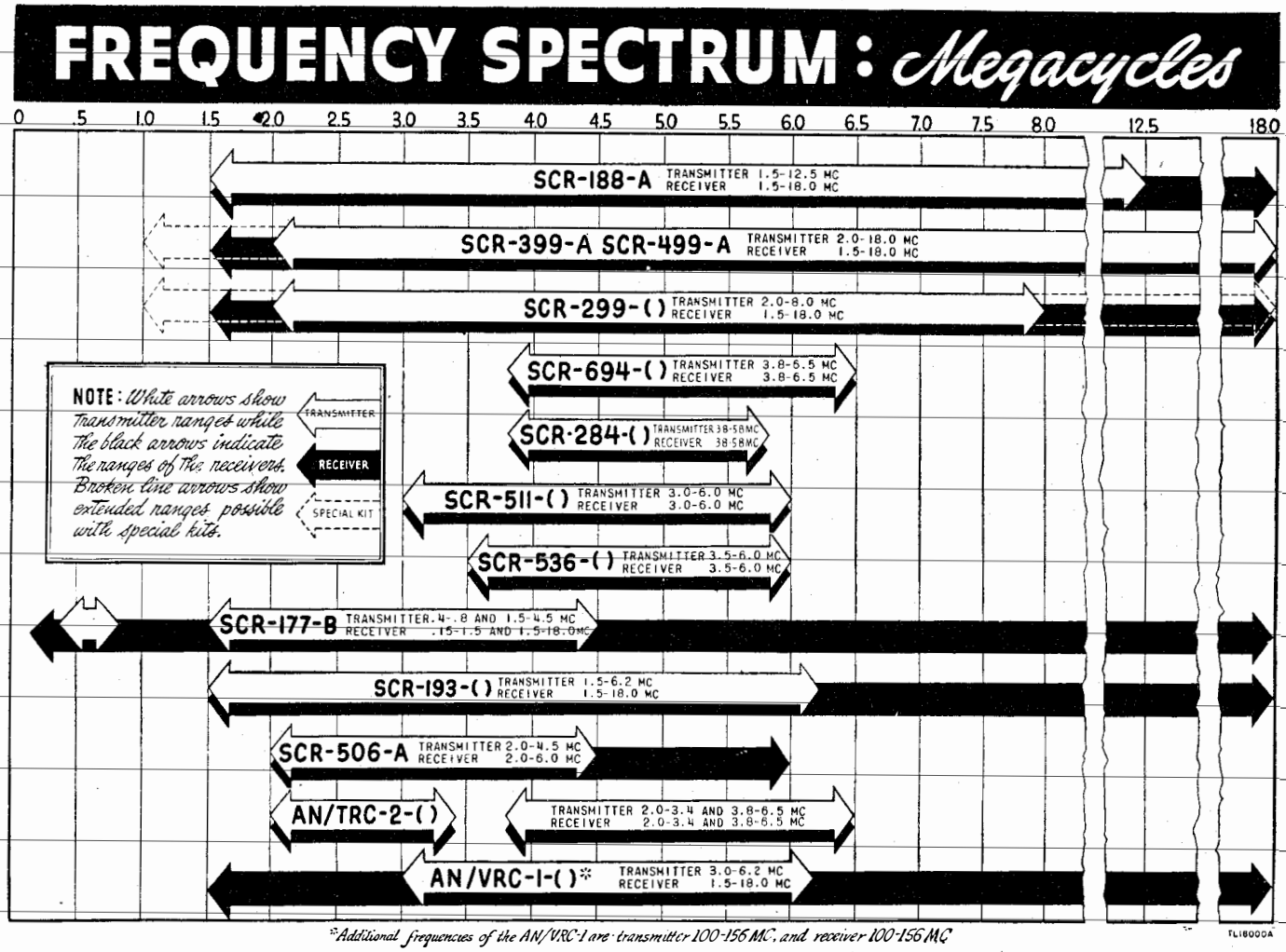

Figure 6. Frequency spectrum chart.

b. RADIO RECEIVERS BC–312–( ) AND BC–342–( ).

Frequency range:
Band A ..... 1.5 mc to 3 mc
Band B ..... 3 mc to 5 mc
Band C ..... 5 mc to 8 mc
Band D ..... 8 mc to 11 mc
Band E ..... 11 mc to 14 mc
Band F ..... 14 mc to 18 mc
Circuit ..... superheterodyne
Types of signals which can be received ..... c-w, tone, and voice
Number of tubes 9
Intermediate frequency ..... 470 kc
Method of calibration ..... Frequency Meter Set SCR–211–( )
Antenna (whip) ..... Mast Base MP–48 mounted in Mast Base Bracket MP–50 and Mast Sections MS–51 to MS–53

Power input:
Radio Receiver BC–312–( ) ..... 50-55 watts
Radio Receiver BC–342–( ) ..... 70-85 watts
Power source ..... 12-volt battery for Radio Receiver BC–312–( )
110-volt 50/60 cycle ac for Radio Receiver BC–342–( )
Weight ..... 40-50 lb (each)

5. List of Components and Packaging Data

The following is an alphabetical list of items issued with Radio Sets SCR–399–A and SCR–499–A.

Note. Running spares are for initial issue only and are not to be requisitioned as a kit or group as shown in the list of components.

Radio Set SCR–399–A	*Radio Set SCR–499–A*	*Component*
4	4	Antenna guy assembly (receiver)
2	2	Antenna guy assembly (transmitter)
1	1	Antenna Tuning Unit BC–939–A
1	1	Antenna doublet kit
1	1	Axle RL–27–B
12	12	Battery BA–30; spare
2	2	Battery, storage; 6-volt
2	2	Box BX–19–A
1	1	Box BX–34–B; with crystals
6	0	Bracket for gasoline can
2	2	Brush, high-voltage; for dynamotor of Radio Receiver BC–312–( ); spare
2	2	Brush, low-voltage; for dynamotor of Radio Receiver BC–312–( ); spare
1	1	Bumper clamp (for Cord CO–335)
1	1	Chest CH–88–A (wall)
1	1	Chest CH–89–A (seat bench)
1	1	Chest CH–109–A (12-volt battery)
1	0	Chest CH–112–A
0	1	Chest CH–112–B
1	0	Chest CH–119–A (wall)
0	1	Chest CH–119–B (wall)
1	1	Chest CH–120–A (main operating)
1	1	Chest CH–121–A (auxiliary)
1	1	Cord CX–141/MRQ–2; Junction Box JB–70–A to Speech Amplifier BC–614–E; 3-foot
1	1	Cord CX–143/MRQ–2 (main audio); 55-inch (LS–3 branch 21 inches, BC–342 branch 10 inches)
0	1	Cord CD–201–A; Key J–37 to Junction Box JB–70–A
1	1	Cord CX–140/MRQ–2 (auxiliary audio); 53-inch (BC–312–( ) branch 11 inches)
1	1	Cord CO–313 (a-c extension); 100-foot
1	1	Cord CO–314 (a-c connection); 3-foot
2	2	Cord CO–316 (power and control); 11-foot; 1 in use, 1 spare
1	1	Cord CD–318–A; for Microphone T–30
2	1	Cord CO–335 (power and control); 14-foot; 1 in use, 1 spare (SCR–399–A), no spare (SCR–499–A)
2	2	Cord CD–564 (power); 3-foot; 1 in use, 1 spare
2	2	Cord CD–565 (control and power); 4-foot; 1 in use, 1 spare
2	2	Cord CD–566 (control); 4-foot; 1 in use, 1 spare
4	4	Cord CD–605; for Headset HS–30
1	1	Cord CD–652 (power and control extension); 100-foot
0	1	Cord CD–1117; for Loudspeaker LS–3
1	1	Cord CD–1177 (audio patch); 2-foot
1	1	Cord CD–659 (power); 12-volt battery to receiver; shelter connection; 6-foot

Radio Set SCR–399–A	*Radio Set SCR–499–A*	*Component*
1	1	Cord CD–690 (power); 12-volt battery to receiver; field connection; 6-foot
2	2	Cord CD–763 (transmitter power); 4-foot; 1 in use, 1 spare
2	2	Cord CD–764 (transmitter control); 15-foot; 1 in use, 1 spare
1	1	Cover BG–141–A; for Chest CH–89–( )
1	1	Cover BG–142–A; for Chest CH–119–( )
1	1	Cover BG–143–A; for Chest CH–121–( )
1	1	Cover BG–144–A; for Chest CH–88–( )
1	1	Cover BG–145–A; for Chest CH–120–( )
1	1	Cover BG–146–A; for Radio Transmitter BC–610–E and Antenna Tuning Unit BC–939–A
1	1	Counterpoise CP–15–B
2 (sets)	2 (sets)	Crystals in Crystal Holders FT–171–B
6	6	Drums, gasoline; galvanized steel; with handle; capacity 5 gallons
1	1	Frame FM–59–A; for Reels DR–4
1	0	Frame FM–62–A; for spare tire
1	1	Frequency Meter Set SCR–211–( ); with spare tubes and batteries
1	1	Fire extinguisher; Randolph Laboratories model FF–4
6	14	Fuse FU–21–A; for Radio Receivers BC–312–( ) and BC–342–( ); 2 in use, 4 spare (SCR–399–A), 12 spare (SCR–499–A)
4	5	Fuse FU–27; for Radio Receiver BC–342–( ); 1 in use, 3 spare (SCR–399–A), 4 spare (SCR–499–A)
7 (sets)	7 (sets)	Fuses for Radio Transmitter BC–610–E and Speech Amplifier BC–614–E; 1 in use, 6 spare, consisting of— 2—25-ampere fuses 1—20-ampere fuse 1— 5-ampere fuse 1— 3-ampere fuse
7	7	Fuse; 25-ampere; 1 in use, 6 spare (used in Chest CH–109–A)
1	1	Heater, electric; Electromode model AA–15
4	4	Headset HS–30–( ); 2 in use, 2 spare
1	1	Holder for fire extinguisher
1	1	Junction Box JB–60–A
1	1	Junction Box JB–70–A
3	3	Key J–37; 2 in use, 1 spare
1	0	Key J–45
10	7	Lamp; 50-watt; 115-volt; 3 in use, 7 spare for SCR–399–A; 2 in use, 5 spare for SCR–499–A
2	2	Lamp; 50-watt; 12-volt; spare
2	2	Lamp, trouble, emergency; 115-volt; with 25-foot extension cord and 50-watt lamp
1	1	Lamp, trouble, emergency; 12-volt; with 25-foot extension cord and 50-watt lamp
8	8	Lamp LM–27; for radio receivers; 4 spare
2 (sets)		Lamp; for Trailer K–52–( ); spare
1	0	Lamp fixture (shelter)
2	2	Lamp fixture (operating chests)
2	2	Loudspeaker LS–3
2	2	Mast Base MP–47–A; 1 in use, 1 spare
3	3	Mast Base MP–48; 2 in use, 1 spare
0	1	Mast Base Bracket MP–59–A; for Mast Base MP–47–A
3	3	Mast Base Bracket MP–50–A; for Mast Base MP–48; 2 in use, 1 spare
4	4	Mast Section MS–49; 1 in use, 3 spare
4	4	Mast Section MS–50; 1 in use, 3 spare
6	6	Mast Section MS–51; 3 in use, 3 spare
6	6	Mast Section MS–52; 3 in use, 3 spare
6	6	Mast Section MS–53; 3 in use, 3 spare
2	2	Mast Section MS–54
2	2	Microphone T–50; dynamic; 1 in use, 1 spare
1	1	Microphone T–17
1	0	Microphone T–30 (throat)
0	1	Microphone T–45

Radio Set SCR-399-A	*Radio Set SCR-499-A*	*Component*
3	3	Nozzle; for gasoline drums
		Parts, spare:
1 (set)	1 (set)	For Radio Transmitter BC-610-E and Speech Amplifier BC-614-E consisting of 33 percent of the number of the following parts used in the radio transmitter and speech amplifier, but not less than 1 each
		Fixed and variable resistors
		Fixed capacitors
		R-f choke coils
1 each	1 each	Every type relay used in Speech Amplifier BC-614-E, Radio Transmitter BC-610-E, and Junction Box JB-70-A
1 each	1 each	Every type switch used, except band switch
20	20	Each ceramic insulator used for the power-amplifier variable capacitor
4	4	Each ceramic insulator used for the power-amplifier coil unit
4	4	Each ceramic spacer used for the power-amplifier coil unit
1 each	1 each	Circuit breaker for Junction Box JB-70-A
7 each	7 each	Every pilot lamp and dial lamp used in Radio Transmitter BC-610-E and Speech Amplifier BC-614-E (For itemized list of resistors, capacitors, and chokes supplied as spares, see the maintenance parts list, par. 198)
1	1	Power Unit PE-95-( ); including tools, 2 batteries (6-volt), and spare parts
1	1	Radio Receiver BC-312-( ); including Mounting FT-162 and 2 Mountings FT-178
1	1	Radio Receiver BC-342-( ); including Mounting FT-162 and 2 Mountings FT-178
1	1	Radio Transmitter BC-610-E; including 24 tuning units, 14 coil units, 2 Capacitors CA-423, and 2 sets tuning charts
1	1	Rectifier RA-63-(*)
2	2	Reels DR-4
1	1	Rope RP-5; 50-foot
1	1	Speech Amplifier BC-614-E
1	0	Shelter HO-17-A (mobile)
1	0	Speaking tube
2	2	Stake GP-8; with 10 feet of copper braid
3	3	Strap ST-19-A
1	0	Table frame; for mounting Chests CH-120-A and CH-121-A in Shelter HO-17-A
3	0	Part List for Shelter HO-17-( )
2	2	TM 11-281; for Radio Sets SCR-399-A and SCR-499-A
2	2	TM 11-904; for Power Unit PE-95-( )
2	2	TM 11-850; for Radio Receivers BC-312-( ) and BC-342-( )
2	2	TM 11-300; for Frequency Meter Set SCR-211-( )
2	2	TM 11-333; for Telephone EE-8-( )
2	2	Telephone EE-8-( )
1	0	Tire and wheel; spare for truck and trailer
1	1	Tool equipment TE-48
1	1	Set tools and repair equipment consisting of—
		1 Analyzer BC-1052-E
		1 can carbon tetrachloride
		1 drill, electric; 110-volt ac; ½-inch
		1 drill, twist; carbon-steel; ⅜-inch
		1 drill, twist; carbon-steel; ½-inch
		2 pair pliers
		1 hammer, claw; 16-ounce
		1 set hardware, assorted
		1 hydrometer; for storage batteries
		2 battery lift strap
		5 pounds solder, rosin-core
		1 can machine oil
		1 Soldering Iron TL-120
		3 rolls tape, friction; ½-inch

Radio Set SCR-399-A	Radio Set SCR-499-A	Component
		1 roll tape, rubber; ½-inch
		1 Torch TL-130
		2 No. 6-32 Allen head wrench
		2 No. 8-32 Allen head wrench
		2 Allen head wrench for ¼-inch screw
		1 sheet crocus cloth
8	8	Tube VT-65-A (JAN-6C5G); for Radio Receivers BC-312-( ) and BC-342-( ); 4 installed, 4 spare
4	4	Tube VT-66-A (JAN-6F6G); for Radio Receivers BC-312-( ) and BC-342-( ); 2 installed, 2 spare
16	16	Tube VT-86-A (JAN-6K7G); for Radio Receivers BC-312-( ) and BC-342-( ); 8 installed, 8 spare
4	4	Tube VT-87-A (JAN-6L7G); for Radio Receivers BC-312-( ) and BC-342-( ); 2 installed, 2 spare
4	4	Tube VT-88-A (JAN-6R7G); for Radio Receivers BC-312-( ) and BC-342-( ); 2 installed, 2 spare
2	2	Tube VT-97 (JAN-5W4); for Radio Receiver BC-342-( ); 1 installed, 1 spare
6	12	Tube VT-46-A (JAN-866-A/866); for Radio Transmitter BC-610-E; 2 installed, 4 spare (SCR-399-A), 10 spare (SCR-499-A)
4	7	Tube VT-95 (JAN-2A3); for Radio Transmitter BC-610-E; 2 installed, 2 spare (SCR-399-A), 5 spare (SCR-499-A)
6	12	Tube VT-100 (JAN-807); for Radio Transmitter BC-610-E; 2 installed, 4 spare (SCR-399-A), 10 spare (SCR-499-A)
2	4	Tube VT-107 (JAN-6V6); for Radio Transmitter BC-610-E; 1 installed, 1 spare (SCR-399-A), 3 spare (SCR-499-A)
2	4	Tube VT-115 (JAN-6L6); for Radio Transmitter BC-610-E; 1 installed, 1 spare (SCR-399-A), 3 spare (SCR-499-A)
6	10	Tube VT-139 (JAN-OD3/VR-150); for Radio Transmitter BC-610-E; 3 installed, 3 spare (SCR-399-A), 7 spare (SCR-499-A)
5	8	Tube VT-145 (JAN-5Z3); for Radio Transmitter BC-610-E; 2 installed, 3 spare (SCR-399-A), 6 spare (SCR-499-A)
5	8	Tube VT-218 (JAN-100-TH); for Radio Transmitter BC-610-E; 2 installed, 3 spare (SCR-399-A), 6 spare (SCR-499-A)
2	4	Tube VT-220 (JAN-250-TH); for Radio Transmitter BC-610-E; 1 installed, 1 spare (SCR-399-A), 3 spare (SCR-499-A)
2	4	Tube VT-80 (JAN-80); for Speech Amplifier BC-614-E; 1 installed, 1 spare (SCR-399-A), 3 spare (SCR-499-A)
2	3	Tube VT-103 (JAN-6SQ7); for Speech Amplifier BC-614-E; 1 installed, 1 spare (SCR-399-A), 2 spare (SCR-499-A)
2	3	Tube VT-233 (JAN-6SR7); for Speech Amplifier BC-614-E; 1 installed, 1 spare (SCR-399-A), 2 spare (SCR-499-A)
4	7	Tube VT-94 (JAN-6J5); for Speech Amplifier BC-614-E; 2 installed, 2 spare (SCR-399-A), 5 spare (SCR-499-A)
6	10	Tube VT-231 (JAN-6SN7GT); for Speech Amplifier BC-614-E; 3 installed, 3 spare (SCR-399-A), 7 spare (SCR-499-A)
1	1	Typewriter, portable; with telegrapher's keyboard; includes case
1	0	Trailer K-52-( )
1	1	Wire, antenna; 100-foot
1	1	Wire W-110-B (on Reels DR-4); 4,800-foot.

See paragraph 27 for packaging data on Radio Set SCR-399-A and Table II (par. 28) for data on Radio Set SCR-499-A.

6. Major Components

The major components of Radio Set SCR-399-A are furnished installed in a shelter and trailer. Shelter HO-17-A contains the components which comprise the radio station, and should be mounted on a 2½-ton, 6 x 6 cargo truck for mobile use. Trailer K-52-( ) contains Power Unit PE-95-( ). The major components of the set are:

Radio Transmitter BC-610-E (par. 7)
Speech Amplifier BC-614-E (par. 8)
Junction Box JB-70-A (par. 9)
Radio Receivers BC-342-( ) and BC-312-( ) (par. 10)

Antenna Tuning Unit BC–939–A (par. 11)

Antenna (par. 12)
Power Unit PE–95–( ) (par. 13)

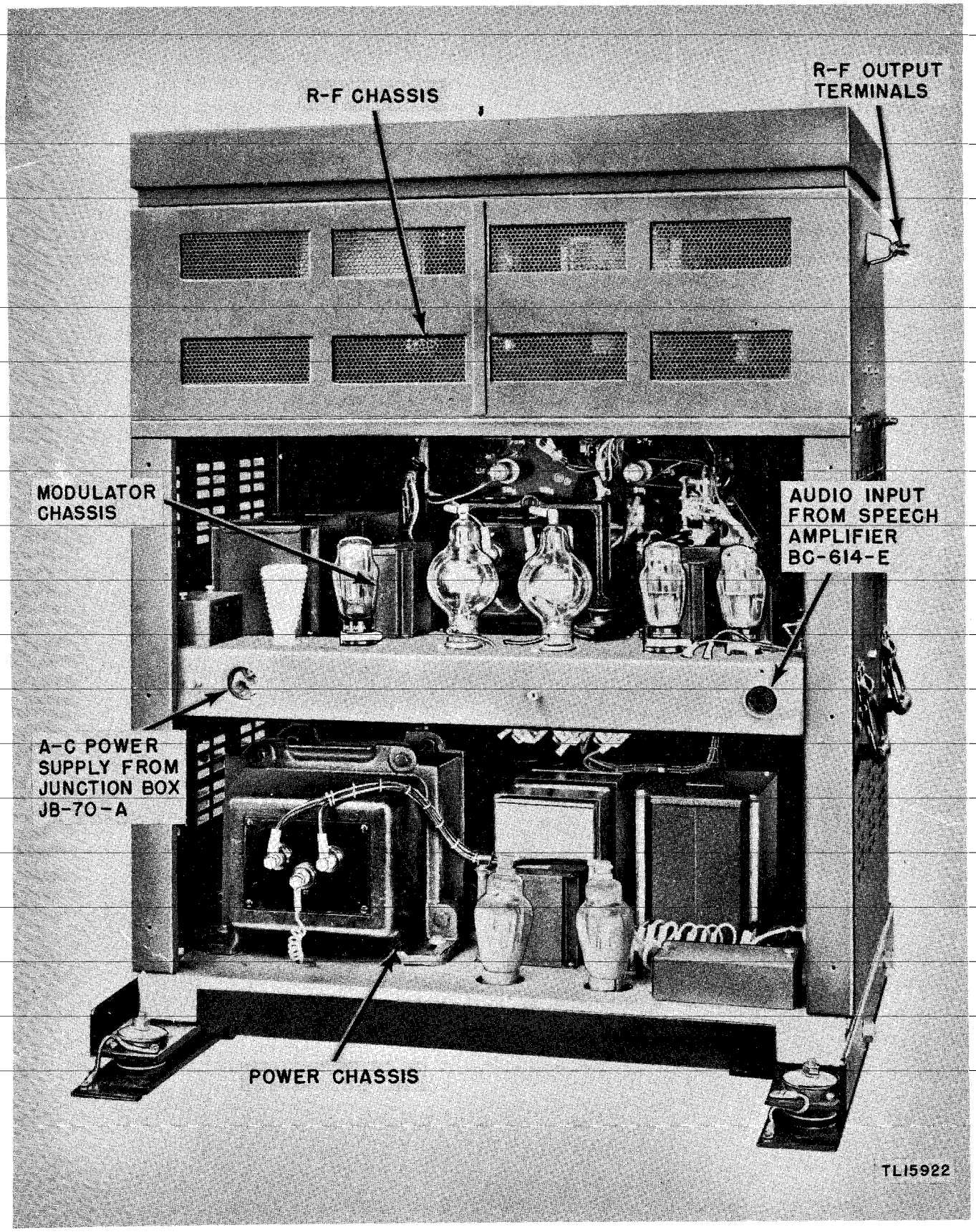

Figure 7. Radio Transmitter BC–610–E chassis assembly—rear view.

7. Radio Transmitter BC–610–E (fig. 7)

a. The transmitter assembly is made up of three chassis. The top chassis is referred to as the r-f (radio-frequency) section and includes all of the r-f components. The center chassis is called the modulator section, since it contains most of the audio and modulator equipment. The bottom chassis includes the high-voltage power-supply and overload relay. It is called the power-supply section. The three chassis are assembled into a sheet steel cabinet with a front panel upon which the external controls and metering instruments are mounted. (See fig. 5.)

b. The transmitter is bolted to the cradle frame shock-mounting base which is anchored to the floor with wrench nuts. The weight of the transmitter is 450 pounds; installed, the over-all weight is approximately 500 pounds.

c. The frequency range of the transmitter is 2 to 18 megacycles. This wide frequency range is covered by means of three sets of plug-in tuning units, eight to a set; two sets of plug-in coil units, seven to a set; and Capacitor CA–423. Each tuning unit and associated coil unit, or coil unit with capacitor, covers a portion of the range. (See table III.) The frequency is controlled by the master oscillator or the crystal oscillator, depending on the position of the M.O.-XTAL switch on the tuning unit. The transmitter can be used for radiotelegraph and radiotelephone communication. At frequencies below 8 megacycles the power output of the transmitter exceeds 400 watts on continuous wave and 300 watts on voice. The power output is somewhat less at higher frequencies. The transmitter will operate satisfactorily with input power of 1,700 to 2,000 watts from a 115-volt, 50/60 cycle a-c (alternating-current) source.

8. Speech Amplifier BC–614–E (fig. 8)

a. The amplifier is shock-mounted to the top

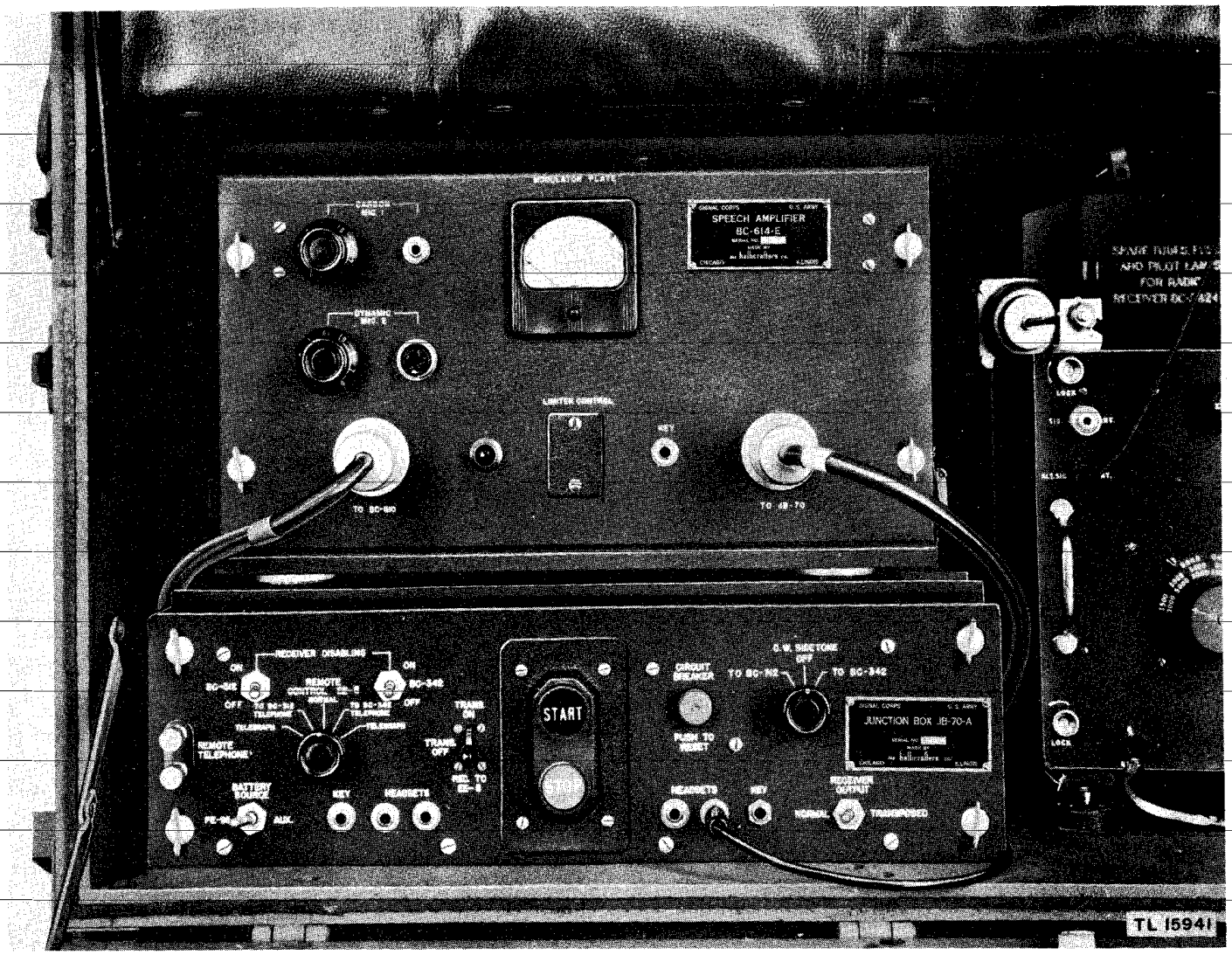

Figure 8. Speech Amplifier BC–614–E and Junction Box JB–70–A in Chest CH–120–A — front view.

of Junction Box JB–70–A in Chest CH–120–A. For convenient removal, four snap fasteners are used to anchor the speech amplifier to its shock-mounting. The weight of the speech amplifier, less shock-mount, is approximately 31 pounds.

b. The speech amplifier raises the microphone output to a level suitable for voice modulation of the transmitter. It also provides sidetone for headset monitoring of c-w transmissions. Speech Amplifier BC–614–E contains its own plate and filament supply unit which draws approximately 40 watts from the 115-volt, 50/60-cycle, a-c source.

9. Junction Box JB–70–A

a. The junction box is a junction point for most of the cords and cables which interconnect the various components. Power and control cords plug into either the bottom (through the bottom of Chest CH–120–A) or the side of the junction box. Key and headset connections are plugged into the jacks on the front panel.

b. Junction Box JB–70–A serves as a control center for the station. The front panel controls (fig. 8) provide for:

(1) Starting or stopping Power Unit PE–95–( ).

(2) Resetting the circuit breaker in the power mains.

(3) Selection of 12-volt battery source.

(4) Control of transmission and reception.

(5) Remote control operation.

(6) Choice of manual or automatic receiver disabling.

(7) Choice of receiver output to headset.

(8) A sidetone signal to monitor transmission during c-w operation.

10. Radio Receivers BC–342–( ) and BC–312–( )

a. RADIO RECEIVER BC–342–( ). Radio Receiver BC–342–( ) is in Chest CH–120–A. It is anchored by Mountings FT–162 and FT–178. This receiver is powered by the 115-volt, 50/60-cycle, a-c source. It is capable of receiving c-w, voice-modulated, or tone-modulated signals over an r-f range of 1.5 to 18 megacycles.

b. RADIO RECEIVER BC–312–( ). Radio Receiver BC–312–( ) is anchored in Chest CH–121–A by Mountings FT–162 and FT–178. It is a d-c (direct-current) receiver with the same receiving characteristics as Radio Receiver BC–342–( ), except that a crystal filter is not included. The battery in Chest CH–109–A or the battery in Power Unit PE–95–( ) may be used as a source of power. For further information on the receivers, consult TM 11–850.

11. Antenna Tuning Unit BC–939–A (fig. 9)

The tuning unit is mounted on top of Radio Transmitter BC–610–E and is fastened securely by four wingnuts. It couples the output of the transmitter to the transmitting antenna. All controls are mounted on the front panel. The unit weighs 48 pounds.

Caution: WHEN THE TRANSMITTER IS IN OPERATION DO NOT TOUCH ANY PART OF THE ANTENNA TUNING UNIT, EXCEPT THE FRONT PANEL CONTROLS.

12. Antenna System

The antenna system consists of a transmitting antenna and two receiving antennas. (See fig. 1.)

a. TRANSMITTING ANTENNA. Mast Base MP–47–A and Mast Sections MS–49 to MS–53, inclusive, form the transmitting antenna (whip). Mast Base Assembly MP–47–A is mounted through the roof of Shelter HO–17–A and is connected to Antenna Tuning Unit BC–939–A. Mast Section MS–53 is screwed into the mast base to form the lowest section, and Mast Section MS–49 forms the top section of the assembly. For mobile use, the antenna is bent backward (fig. 1) and held in a horizontal position by an insulated guy to the rear of the roof. This provides clearance and keeps the antenna from whipping about while the vehicle is in motion. The snap-catches on the guy permit the release of the antenna to a vertical position to provide more uniform radiation while the set is stationary. When the transmitting antenna is operated vertically, one or two additional Mast Sections MS–54 may be added. A doublet antenna is furnished for operation from a fixed site, since it provides a considerably greater range of communication than the whip antenna. (See par. 123.) A straight wire antenna can be used; 100 feet of wire is issued for this purpose. (See table IV.)

Caution: EXTREMELY DANGEROUS VOLTAGES ARE PRESENT ON THE ANTENNA AND ITS INSULATORS DURING TRANSMISSION. DO NOT TOUCH.

b. RECEIVING ANTENNA. Mast Base MP–48, mounted in Mast Base Bracket MP–50–A, and Mast Sections MS–51 to MS–53 make up a re-

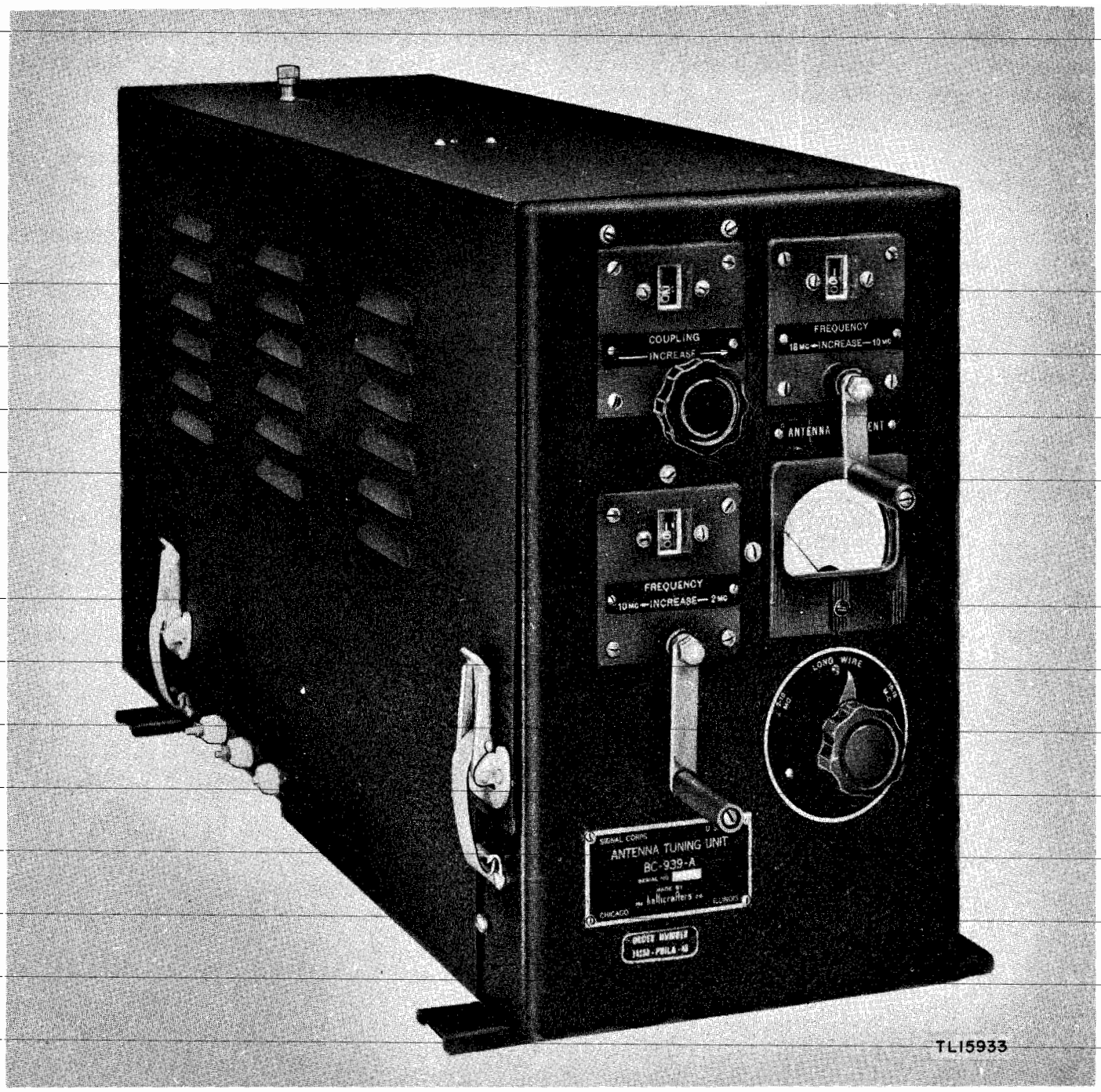

Figure 9. Antenna Tuning Unit BC–939–A.

ceiving antenna. Two receiving antennas are used, since each receiver operates from a separate whip antenna. The antennas are mounted on the upper rear corners of Shelter HO–17–A. (See fig. 1.)

13. Power Unit PE–95–( )

Power Unit PE–95–( ) is a complete, self-contained, gasoline-driven generating unit, capable of delivering 5 kilowatts of a-c power (single-phase 60-cycle at 115 volts) for the operation of Radio Set SCR–399–A, Radio Set SCR–499–A, or other equipment. Power Unit PE–95–( ) can be:

a. Installed in Trailer K–52–( ). (See fig. 10.)

b. Operated 100 feet from the truck by using the extension cables provided with the set.

c. Operated 200 feet from the truck by using two extension cables. (Under this condition, the power unit must be started and stopped at the trailer.)

d. Used as a source of power for lights, etc., at a distance of up to 200 feet from the trailer.

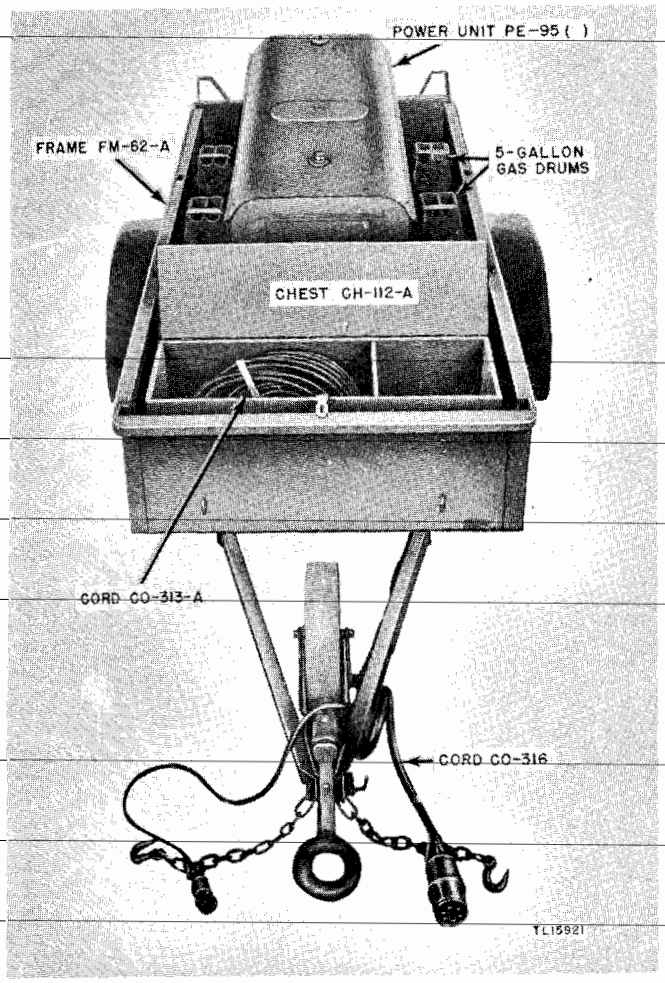

Figure 10. Power Unit PE-95-( ), installed in Trailer K-52-( ).

14. Other Components

The following paragraphs describe the main chests in the radio set and important components other than the major components described above. The chests and additional components are:

- Chest CH-120-A (par. 15)
- Chest CH-121-A (par. 16)
- Chest CH-89-A (par. 17)
- Chest CH-119-A (par. 18)
- Chest CH-88-A (par. 19)
- Frequency Meter Set SCR-211 (par. 20)
- Rectifier RA-63-(*) (par. 21)
- Cordage (par. 22)
- Remote control equipment (par. 23)
- Batteries (par. 24)
- Crystals (par. 25)

15. Chest CH-120-A (Main Operating)

For field use (Radio Set SCR-499-A), Chest CH-120-A is mounted as shown in figure 11. In Radio Set SCR-399-A, the chest is mounted on a frame against the left (or road) side of Shelter HO-17-A and is held in place by a combination of cleats and turnbuckles. (See fig. 3.) All of the necessary radio components (table II) for one operating position are mounted in this chest. Junction Box JB-70-A and Speech Amplifier BC-614-E control transmission and change-over from transmission to reception. Radio Receiver BC-342-( ) and Loudspeaker LS-3 provide for reception. Box BX-19-A contains spare fuses, tubes, and lamps for the receiver. The lower half of the front cover of Chest CH-120-A swings down to form an operating desk large enough for a portable typewriter. Field legs (fig. 11) are strapped to this chest when it is to be set up away from the shelter. The total weight of the chest, including legs and full complement, is 292 pounds.

16. Chest CH-121-A (fig. 12)

The chest is mounted beside Chest CH-120-A in Shelter HO-17-A (fig. 3) and provides a second operating position. When removed from the shelter and set up in the field, Chest CH-121-A becomes a remote operating position from which the transmitter can be modulated over Telephone EE-8-( ), or keyed with Key J-45, through Junction Box JB-60-A (fig. 13). Chest CH-121-A contains Radio Receiver BC-312-( ), Loudspeaker LS-3, Box BX-19-A containing spare parts, and other accessories. A set of field legs is also supplied for this chest. The lower front cover of Chest CH-121-A opens to form a desk top. The total weight of the chest, including legs and full complement, is 157 pounds.

17. Chest CH-89-A

Chest CH-89-A is a combination parts compartment and seat bench. (See fig. 14.) In Shelter HO-17-A, the chest is parallel to the operating chest and fastened to the floor by means of wing bolts. (See fig. 3.) It is 6 feet 8 inches long, 14½ inches high (not including cushions), and 18 inches wide. Fully packed, the chest weighs approximately 300 pounds. Its top is divided into four lids, which can be cushioned to serve as a seat for the operators. The compartment below each lid is subdivided for storage of spare parts, repair equipment, etc., as indicated on the chart attached to the chest. See table I for a typical list of the material packed in Chest CH-89-A. Two movable back rests, together with Straps ST-19-A hooked to Chest CH-89-

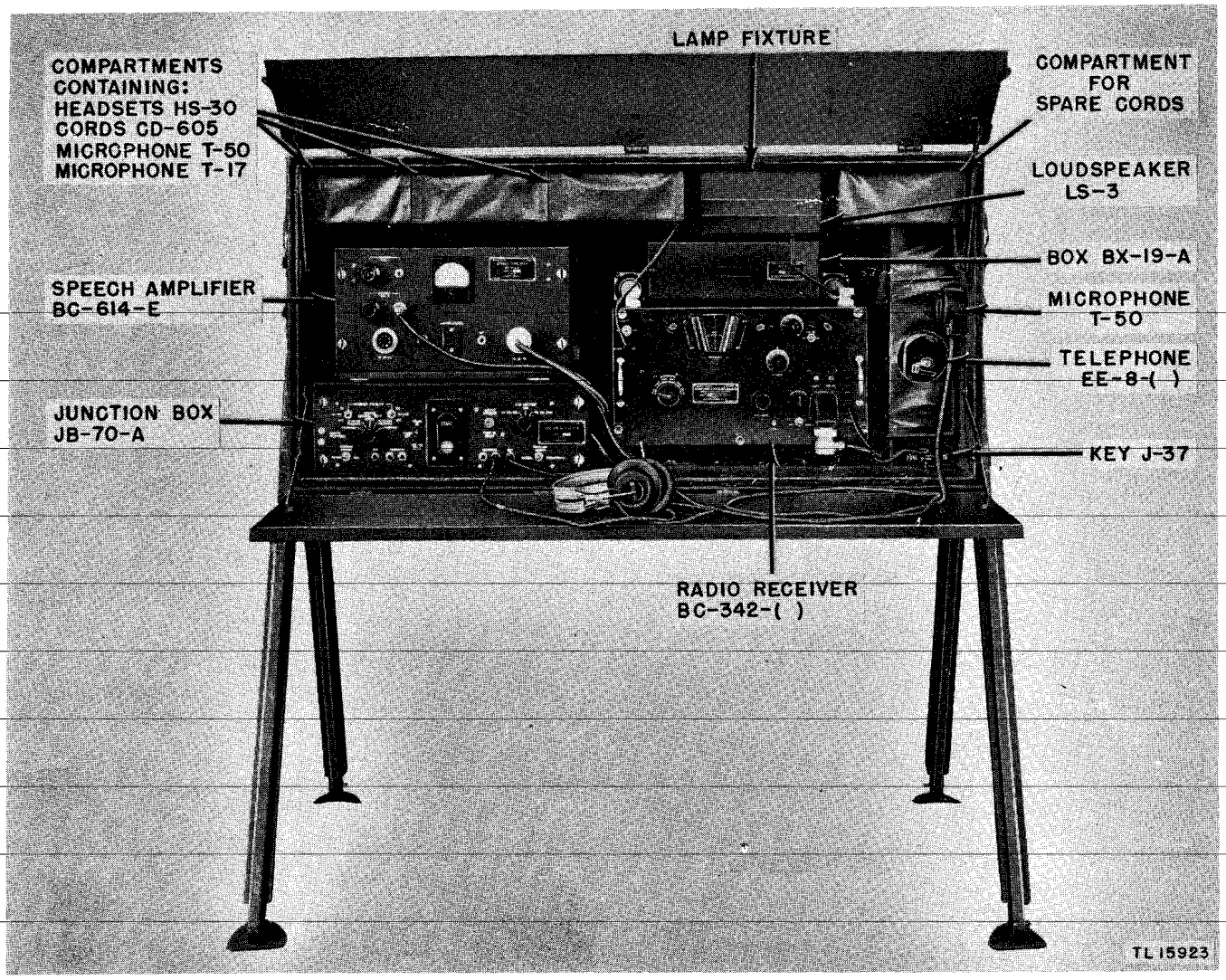

Figure 11. Chest CH-120-A with equipment installed—front view.

A, secure the operator in place when driving on rough roads.

18. Chest CH-119-A (fig. 15)

In Shelter HO-17-A, Chest CH-119-A is placed along the right (curb) wall and is held in position by four trunk clasps. (See fig. 3.) The chest is 55 inches long, 32½ inches high, 12⅝ inches deep and weighs approximately 287 pounds (loaded). Two sliding front panels permit access to the interior compartments in which are stowed the frequency meter, the portable typewriter, box of crystals, Cord CD-652, and tool equipment. Some additional storage space is available for other material. In Radio Set SCR-499-A, the compartment for Cord CD-652 is replaced by compartments for spare tubes, and Chest CH-119-A becomes Chest CH-119-B.

19. Chest CH-88-A (fig. 16)

The chest is mounted inside the shelter and on top of Chest CH-119-A. (See figs. 3 and 4.) It is held to the side of the shelter by four trunk clasps. It is 55 inches long, 18 inches high, and 12⅝ inches deep; fully packed, it weighs approximately 165 pounds. Two sliding front panels permit access to the many compartments in which tuning units and other items are stowed.

20. Frequency Meter Set SCR-211-( )

The frequency meter set is carried in Chest CH-119-A where it is firmly held in place by a strap. (See fig. 15.) It serves as a frequency standard for the radio set, so that the operating frequency of the transmitter and the receivers may be determined accurately in the field. TM 11-300 is supplied with the meter and describes its operation in detail.

21. Rectifier RA-63-(*) (fig. 17)

Rectifier RA-63-(*) is a selenium type of battery charger which is used for charging the 12-volt battery in Chest CH-109-A. The rectifier also furnishes power to operate the keying and disabling relays when Chest CH-109-A is

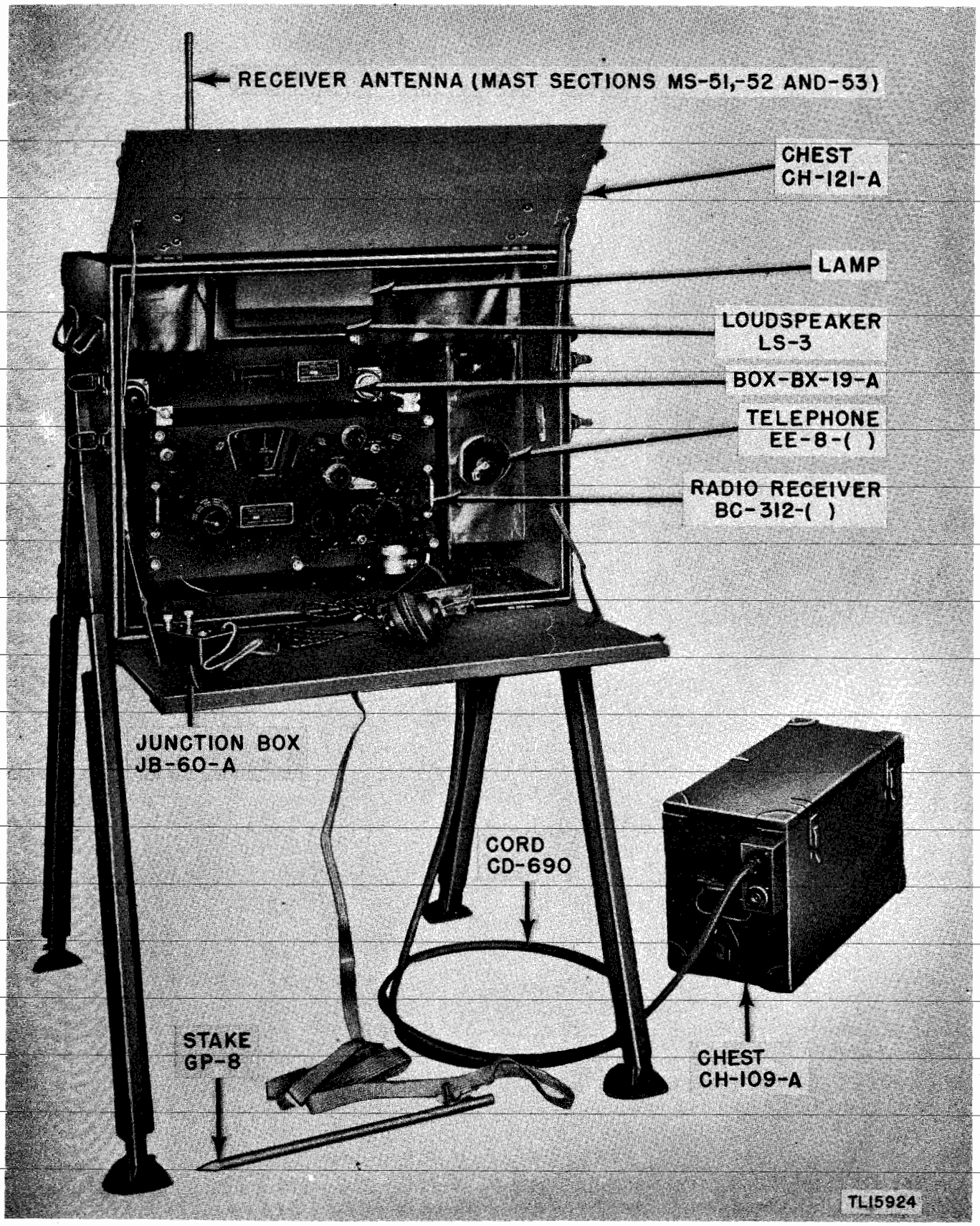

Figure 12. Chests CH-121-A and CH-109-A, as used at a remote position.

removed to a remote position. The rectifier unit is fastened to the floor of the shelter, near the left wall and approximately midway between the two operating chests. (See fig. 3.)

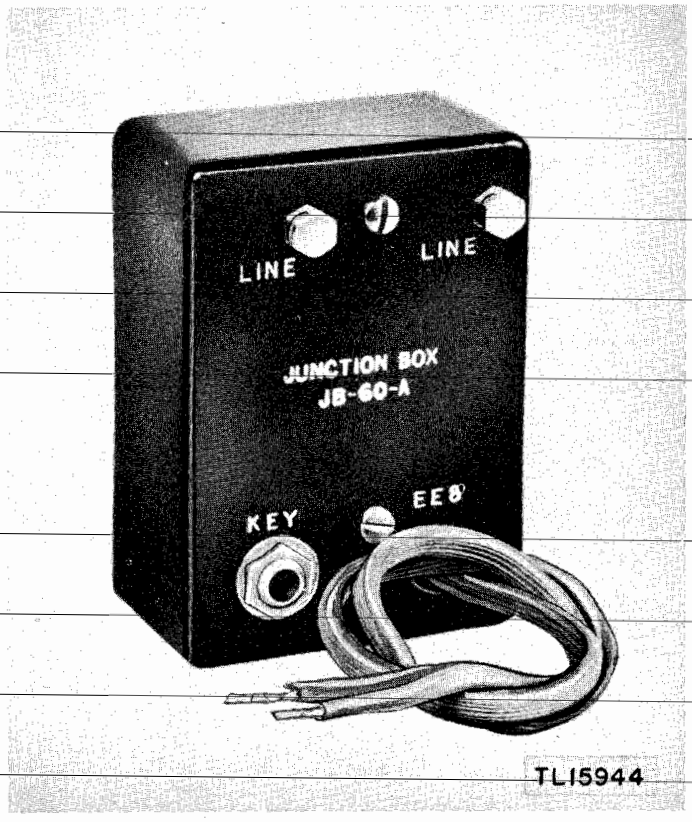

Figure 13. Junction Box JB-60-A.

22. Cordage (fig. 155)

a. Cord CD-564 (power) is a 3-foot power cord connecting Radio Receiver BC-342-( ) with the a-c receptacle in the right side of Junction Box JB-70-A.

b. Cord CD-565 (control and power) is a 4-foot power and control cord connecting Radio Receiver BC-312-( ) with its receptacle in the junction box.

c. Cord CD-566 (control) is a 4-foot control cord connecting Radio Receiver BC-342-( ) with its receptacle in the right side of the junction box.

d. Cord CX-141/MRQ-2 (operating control) is 29 inches long and conducts control circuits between Junction Box JB-70-A and Speech Amplifier BC-614-E. The cord terminates in a plug receptacle on the panel of the speech amplifier and at a terminal strip in the junction box.

e. Cord CX-143/MRQ-2 (main audio) carries the audio output from Radio Receiver BC-342-( ) to switching circuits in Junction Box JB-70-A. This same cord also feeds Loudspeaker LS-3 and Telephone EE-8-( ), both in Chest CH-120-A.

f. Cord CX-140/MRQ-2 (auxiliary audio) carries the audio current from Radio Receiver BC-312-( ) to Junction Box JB-70-A and also feeds Loudspeaker LS-3 in Chest CH-121-A.

g. Cord CD-763 (transmitter power) is 14 feet long. It connects Radio Transmitter BC-610-E with its a-c power receptacle in the junction box.

h. Cord CD-764 (transmitter control) is 15 feet in length. It carries speech and control connections from Speech Amplifier BC-614-E to Radio Transmitter BC-610-E and, in addition, furnishes Speech Amplifier BC-614-E with a-c power. The transmitter end of the cable plugs into the rear modulator apron of the transmitter; the speech-amplifier end plugs into its front panel socket on Speech Amplifier BC-614-E.

i. Cord CO-335 (power and control) is 14 feet long and is used to carry power and control circuits between Junction Box JB-70-A and the shelter outlet to Power Unit PE-95-( ). In mobile operation, the plug end is connected to the bumper bracket underneath the rear of the truck. The cord passes through the hole in the shelter and then through the bottom of Chest CH-120-A. The plug on this end seats in the receptacle inside Junction Box JB-70-A.

j. Cord CD-652 (power and control) is a 100-foot cord for extending all connections between the shelter and trailer. It is equipped with a heavy-duty plug at each end for quick attachment to the system.

k. Cord CO-313 (a-c power) is a 100-foot cord for extending the a-c power connection of the power unit. One end of this cord is provided with a heavy-duty plug which fits the power plug at the tongue of the trailer. The other end of the cord has two lug type terminals from which a-c power can be taken for general use.

l. Cord CD-314 (a-c power) is a 3-foot cord for connecting any outside source of a-c power to Shelter HO-17-A for the operation of the radio set. The cord has a heavy-duty plug on one end for connection to the shelter, and a pair of lug type terminals for attachment to the source of power.

m. Cord CD-659 (12-volt battery cord) is 6 feet long and connects between the outlet receptacle on Junction Box JB-70-A and the plug outlet on Chest CH-109-A.

n. Cord CD-690 (power) is 6 feet long. It is used to connect Radio Receiver BC-312-( ) in

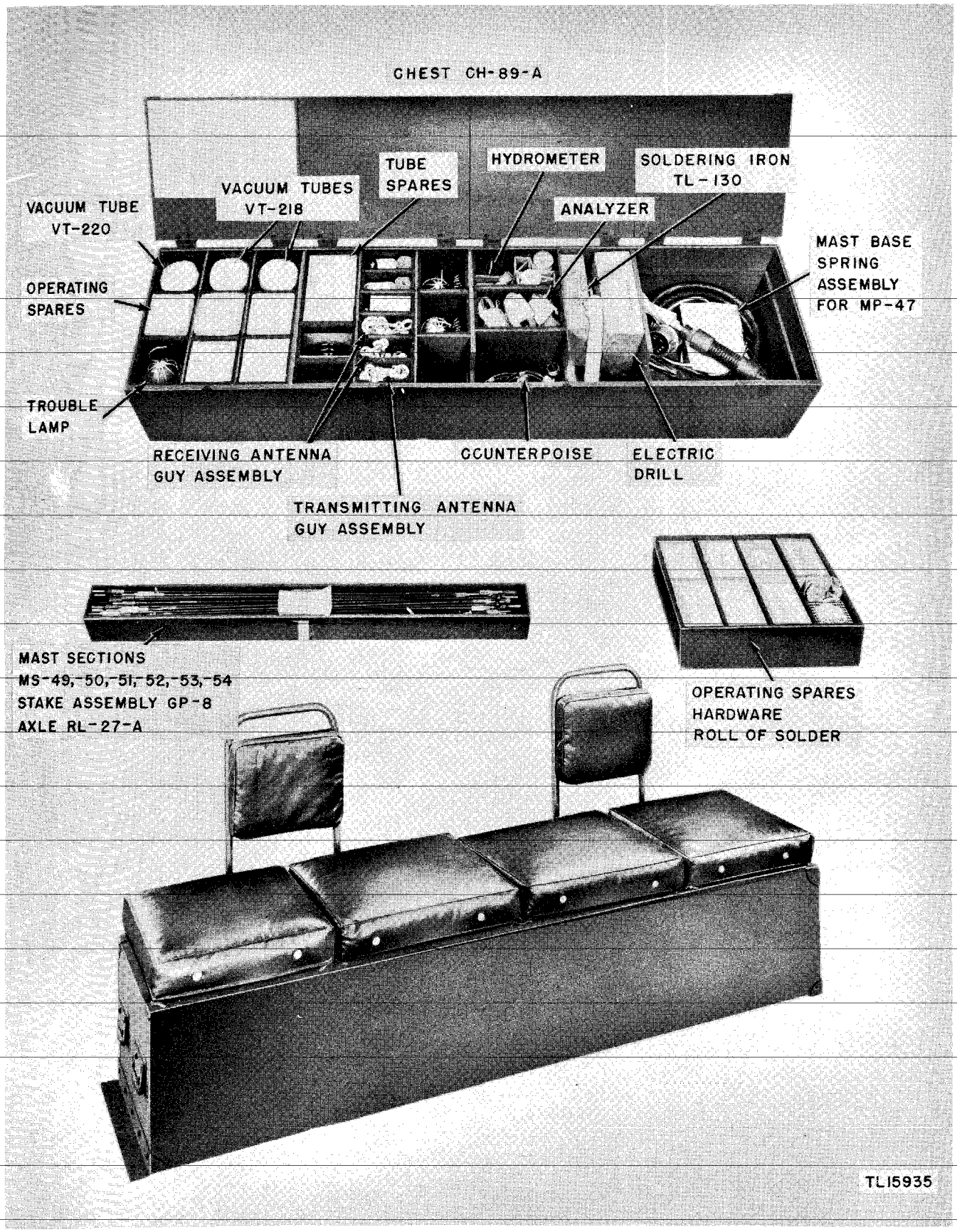

Figure 14. Chest CH–89–A, parts compartments (open) and seat bench (closed).

812293 O—43——3

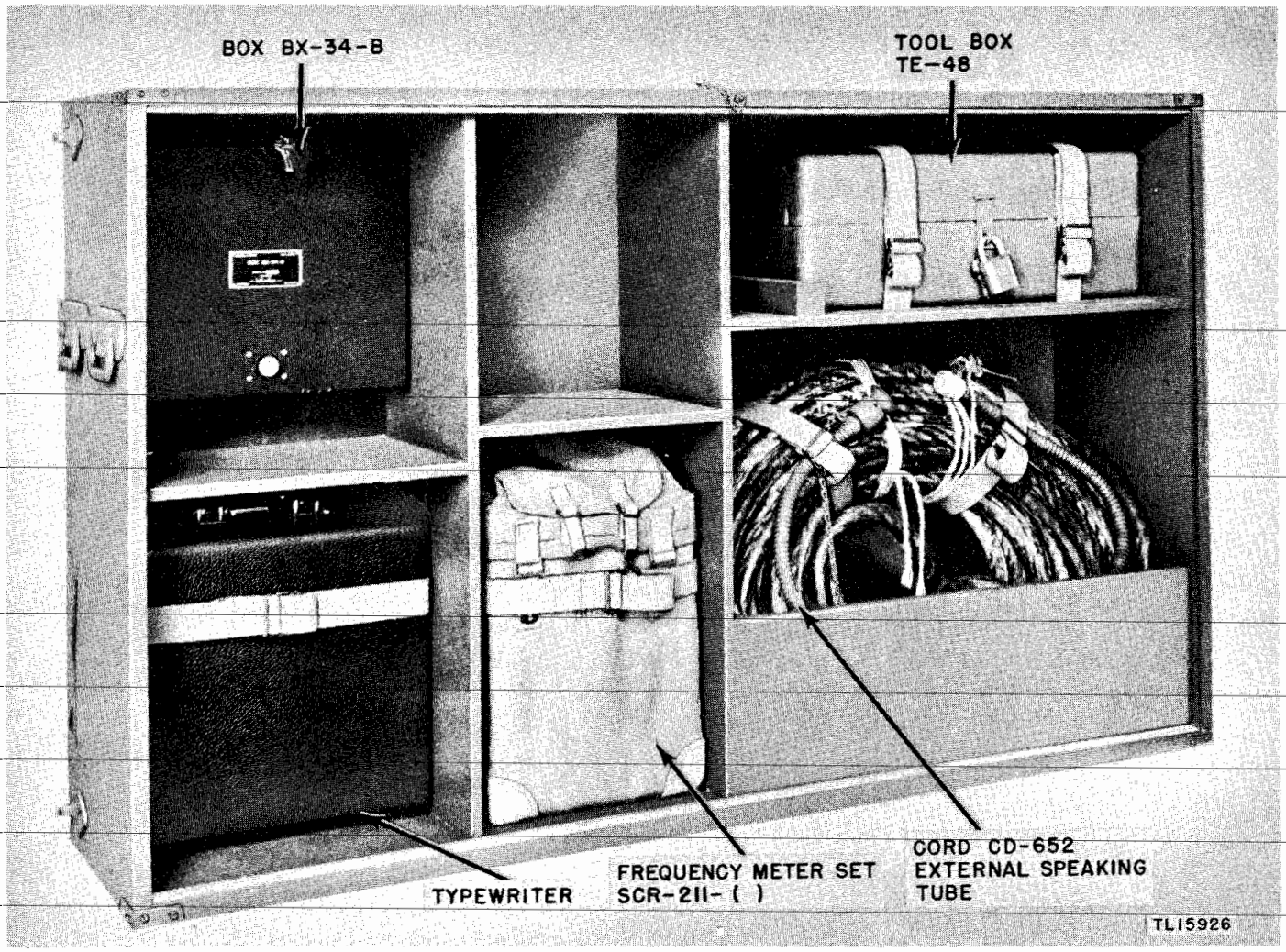

Figure 15. Chest CH-119-A—front panels removed.

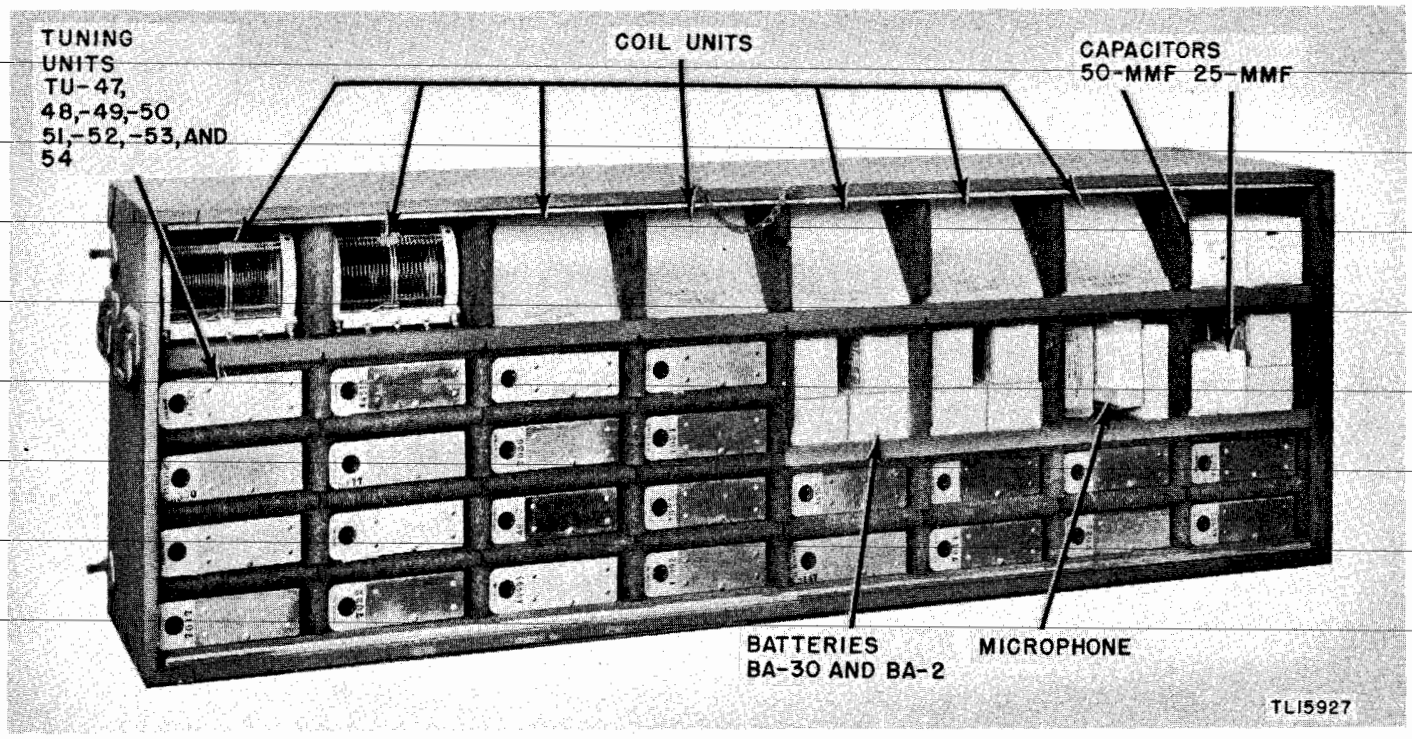

Figure 16. Chest CH-88-A—front panels removed.

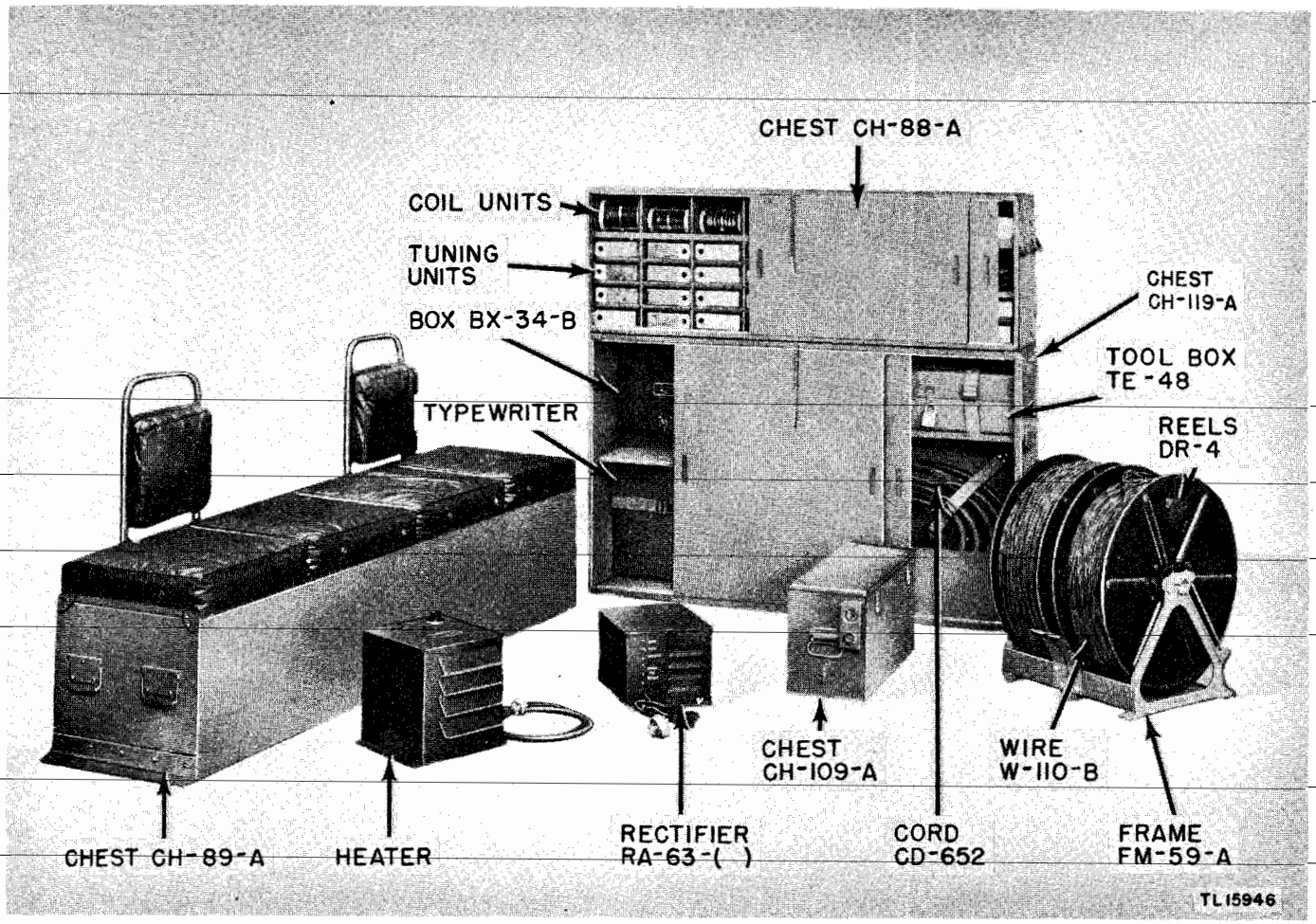

Figure 17. Accessory components of Radio Sets SCR 399–A and SCR–499–A.

Chest CH–121–A to the storage battery in Chest CH–109–A, when both of these units are removed from the radio station.

o. Cord CO–316 (power and control) is a 6-conductor cord, 8.3 feet long. One end connects to the terminal board of the power unit; the other end connects to the power plug under the rear of the truck.

p. Cord CD–201–A is used to connect Key J–37 to Junction Box JB–70–A.

q. Cord CD–1117 is supplied with Loudspeaker LS–3.

23. Remote Control Equipment

a. When connected as directed in section IV, chapter 2, the remote control equipment provides for remote keying and voice modulation of Radio Transmitter BC–610–( ), reception with Radio Receiver BC–312–( ), and communication with the operator at the radio station. The remote operating position may be as much as 1 mile from the set. When receiving and transmitting from a remote position, switching of the remote telephone circuit from transmit to receive must be accomplished at the radio set. Remote keying of c-w transmissions may be effected at the remote position; reception is then provided by using Radio Receiver BC–312–( ), Cord CD–690, and the 12-volt battery (in Chest CH–109–A) at the remote point. (See fig. 13.)

b. The equipment for remote control consists of—

(1) Two Telephones EE–8–( ), one in Chest CH–120–A and one in Chest CH–121–A.

(2) Junction Box JB–60–A, stowed in Chest CH–121–A.

(3) Key J–45, stowed in Chest CH–121–A.

(4) Two Reels DR–4, mounted in Frame FM–59–A. (See fig. 17.)

(5) Wire W–110–B, approximately ½ mile on each Reel DR–4.

(6) Axle RL–27–B, stowed in Chest CH–89–A.

24. Batteries

a. The 12-volt battery in Chest CH–109–A (figs. 2, 3, and 12) consists of two 6-volt storage batteries connected in series. They are in-

terchangeable with the batteries in Power Unit PE–95–( ). The battery output is obtained through a polarized socket mounted on Chest CH–109–A.

b. The batteries in Power Unit PE–95–( ) and those in Chest CH–109–A are exactly alike. In some installations, a switching arrangement is provided to permit the use of either set of batteries for operation of Radio Receiver BC–312–( ).

c. Dry-cell batteries are issued with various components and should be installed in accordance with the instructions in paragraph 35.

25. Crystals

Two sets of crystal holders (36 to the set) are provided in Box BX–34–B (fig. 15), so that the transmitter may be operated at any of the frequencies listed in table V.

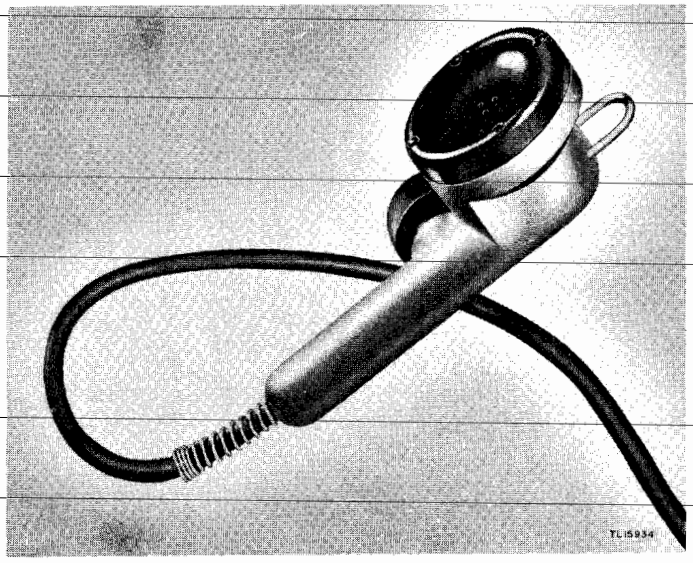

Figure 18. Carbon Microphone T–17.

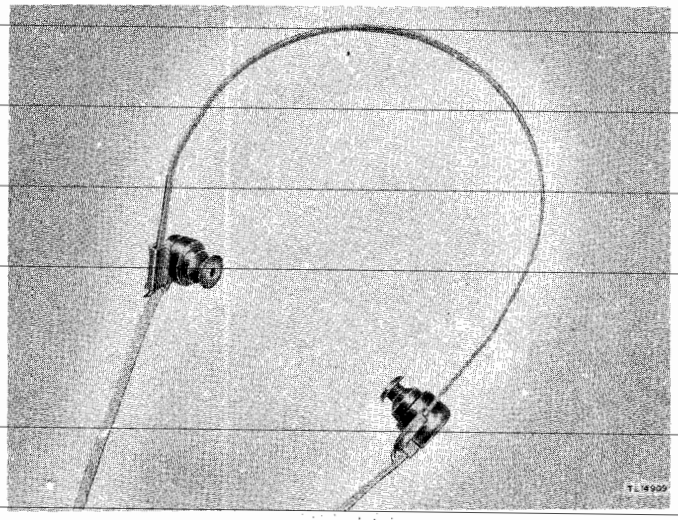

Figure 20. Headset HS–30–( ).

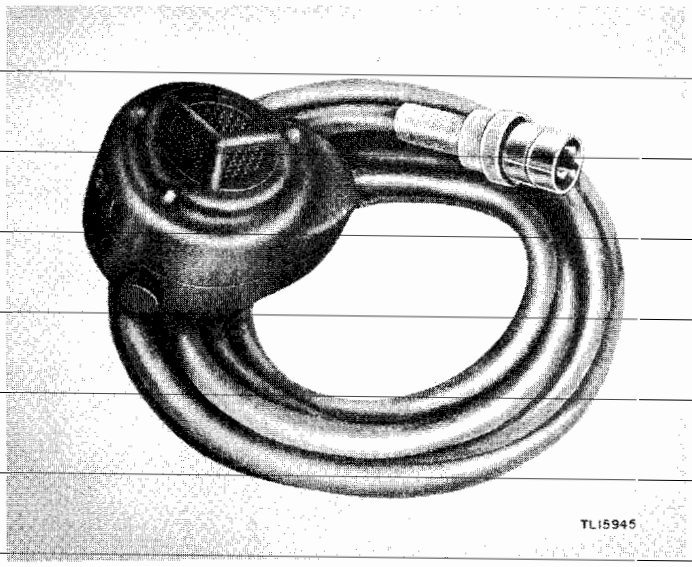

Figure 19. Microphone T–50.

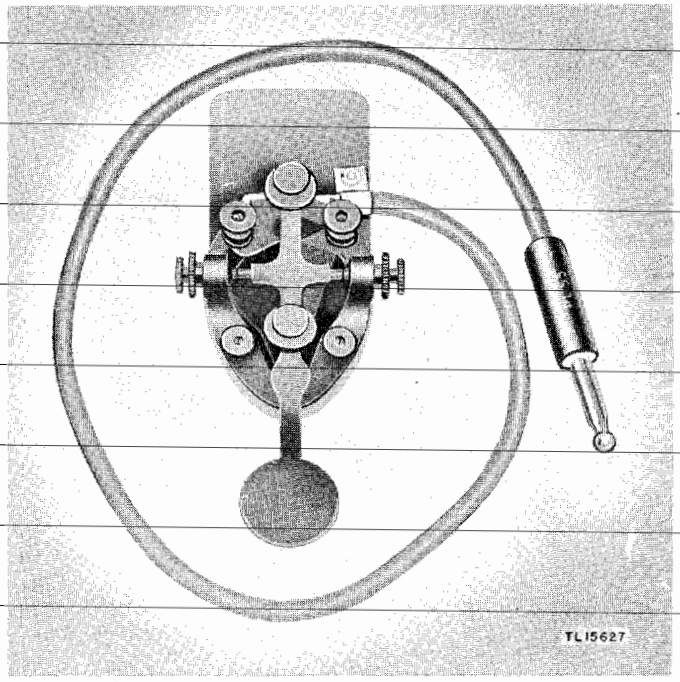

Figure 21. Key J–37.

Section II. INSTALLATION

26. Siting

Note. The following siting information for Radio Set SCR–499–A is also applicable to Radio Set SCR–399–A as a fixed station.

Radio Set SCR–499–A should be set up on a hilltop, elevated ground, or on terrain which is flat over a wide area. A valley or other low ground is to be avoided as much as possible, since the surrounding higher terrain absorbs r-f energy and limits the operating range of the set. Particular care should be taken to avoid a site under or close to steel bridges, underpasses, power lines, and power units, because of the extremely short range possible from any of these sites. If the doublet antenna is used, its directional characteristics should be considered, as explained in paragraph 129.

27. Uncrating, Unpacking, and Checking Radio Set SCR–399–A

a. A shipment of Radio Set SRC–399–A consists of two boxes. One contains Shelter HO–17–A with operating components installed, weighs 7,255 pounds, and is 13′-3″ long, 7′-8″ wide, and 6′-8″ high. The second contains Trailer K–52–( ) with Power Unit PE–95–( ) installed, weighs 4,900 pounds, and is 9′-2″ long, 6′-5″ wide, and 6′-6″ high. Two packing lists are shipped with each box, one attached to the outside and one inside the box. For greatest convenience, the radio set should be uncrated and unpacked as near the operating site as possible. Do not open any box until ready to use its contents.

b. The recommended procedure for uncrating, unpacking, and checking Radio Set SCR–399–A is as follows:

(1) Use nail pullers and pry bars to remove the top of the box containing Shelter HO–17–A. The top must always be removed *first,* so that the sides are free for the next step.

(2) Attach one end of a steel cable or strong rope to the rear of a truck. Fasten a hook to the other end of the cable and catch this hook over the top edge of one side of the shelter box. Use the truck to pull this side from the crate.

(3) Repeat step (2) to remove the other side and the ends of the box. (If a truck is not available, use nail pullers and crowbars.)

(4) Carefully remove the waterproof wrappings from about the shelter.

(5) The openings (windows, doors, etc.) in the shelter are covered with adhesive tape over which a sealing compound has been placed. (See fig. 22.) To remove this protective material, loosen a small section with a sharp object such as a screwdriver or chisel. Grasp the adhesive tape and pull it away from the shelter. The compound will come off with the tape.

(6) Remove the four corner bolts to free the shelter from the crate platform. (See fig. 23.)

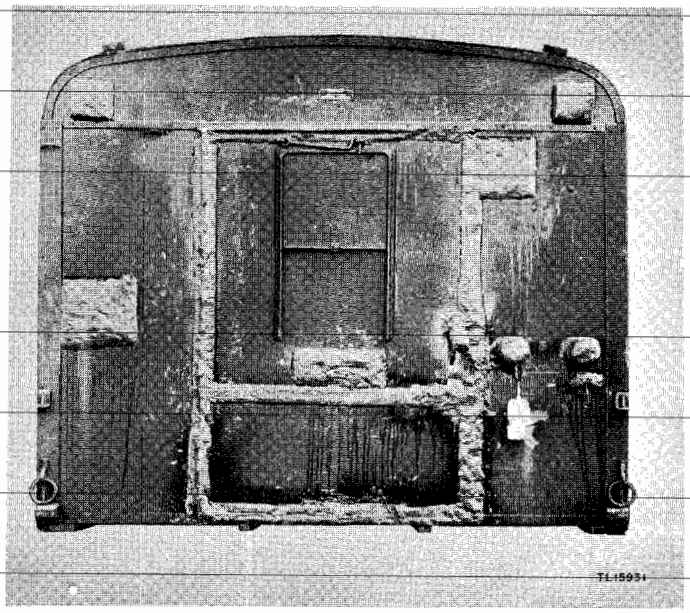

Figure 22. Shelter HO–17–A, sealing compound in place.

(7) Enter the shelter and carefully remove the shoring (wooden props) and bags of silica gel.

(8) Remove the straps which hold the separately packaged components (antenna tuning unit, masts, etc.) in position on the floor of the shelter.

(9) Check the contents of each box against the packing list.

(10) Open each chest and check its contents against the chart on the chest. Refer to table I and to the chest lay-out diagram. (See figs. 137 through 145.)

Table I. Chests and contents

Note. This tabulation is general; an itemized list of contents accompanies each chest. See figures 137 through 145 for lay-out and dimensional drawings of the chests.

CHEST CH–88–A (fig. 138)
- 24 Tuning units
- 14 Coil units
- 1 Microphone T–50
- 3 Capacitors
- *1 Carton spare fuses
- Spare pilot lamps

* Complete list of contents in carton

CHEST CH-89-A (fig. 140)
- *8 Cartons operating spares
- *2 Cartons hardware
- 1 Analyzer
- 1 Hydrometer
- Antenna assembly
- Tools
- Cords
- 1 Trouble lamp
- Spare lamp bulbs
- Spare tubes
- 3 Straps ST-19
- 1 Roll solder
- 1 Anticorona ball
- Machine oil
- Carbon tetrachloride

CHEST CH-109 (fig. 141)
- 2 Storage batteries

CHEST CH-112 (fig. 145)
- 1 Cord CD-659, operating
- 1 Cord CO-335, operating
- 1 Cord CO-652, spare
- 1 Cord CO-313, spare

CHEST CH-119 (fig. 143)
- 1 Box BX-34-B, complete with 72 crystals
- 1 Typewriter
- 2 Trouble lamps, 110-volt
- 1 Frequency Meter Set SCR-211
- 1 Tool Box TE-48
- Miscellaneous tubes

CHEST CH-120-A (fig. 146)
- Junction Box JB-70-A
- Speech Amplifier BC-614-E
- Radio Receiver BC-342-( )
- Loudspeaker LS-3
- Lamp fixture
- Headsets HS-30-( )
- Microphone T-50-( )
- Key J-37
- Field Telephone EE-8-( )
- Box BX-19-A, containing spare fuses, tubes, and lamps for receivers

CHEST CH-121-A (fig. 147)
- Radio Receiver BC-312-( )
- Loudspeaker LS-3
- Headsets HS-30-( )
- Spare battery cord
- Field Telephone EE-8-( )
- Lamp fixture
- Box BX-19-A
- Key J-37

* Complete list of contents in carton

(11) The second box (fig. 24) contains Trailer K-52-( ) in which Power Unit PE-95-( ) is installed prior to shipment. With nail pullers and prybars, remove the top of this box.

(12) Remove the four sides of the trailer box.

(13) Remove the waterproof wrapping from about the trailer.

(14) Remove the shoring and straps which hold the trailer to the bottom of the box. (See fig. 25.)

(15) Remove the trailer from the bottom of the box.

(16) Check the contents of the trailer against the packing list.

28. Uncrating, Unpacking, and Checking Radio Set SCR-499-A

a. A shelter and trailer are not supplied with Radio Set SCR-499-A. Its components are shipped in 23 boxes. (See table II.) Two packing lists are shipped with each box; one inside

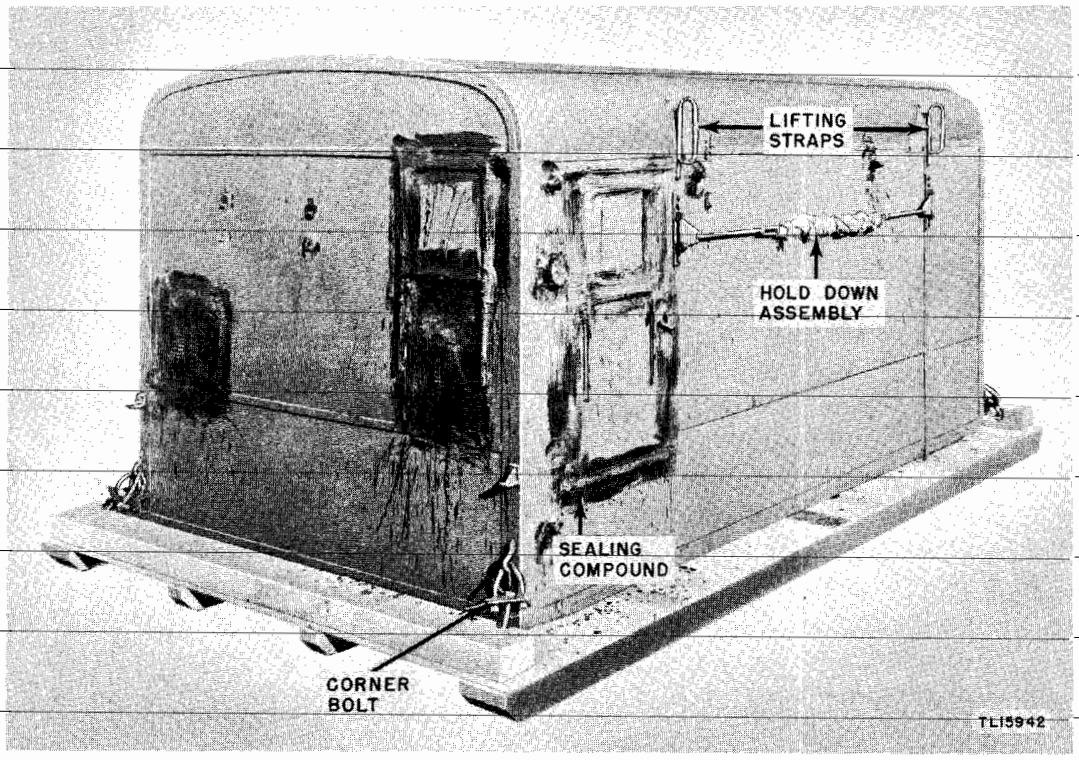

Figure 23. Shelter HO-17-A on shipping crate platform.

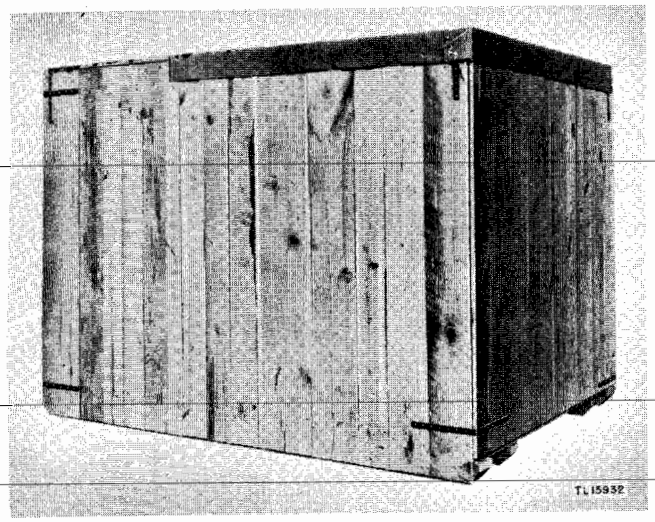

Figure 24. Shipping Box for Trailer K–52–( ) with Power Unit PE–95–( ) installed.

the box and one outside. Do not open any box until its contents are needed for immediate use. For example, if Radio Set SCR–499–A is to be operated on local commercial power, do not open box No. 17 which contains six gasoline cans.

b. The following procedure for uncrating, unpacking, and checking Radio Set SCR–499–A is recommended.

(1) Use nail-pullers and prybars to open each crate.

(2) Remove the outer wrappings and bags of silica gel.

(3) Check the contents of each box against the packing list.

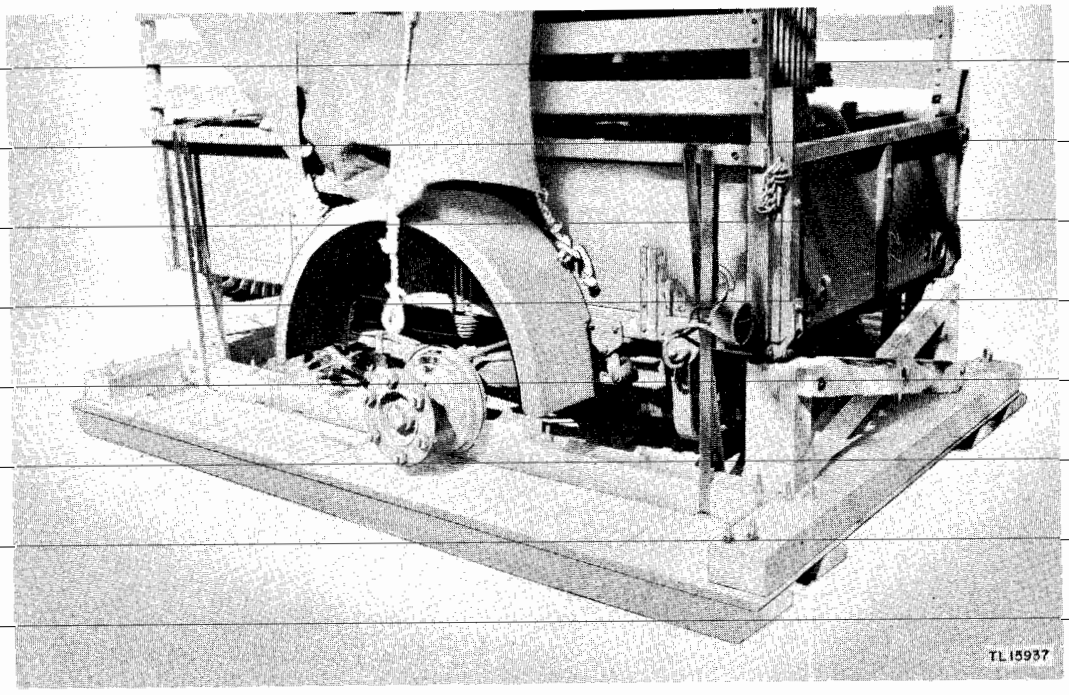

Figure 25. Trailer K–52–( ) with Power Unit PE–95–( ) installed, on shipping crate.

Table II. Typical packing list for radio set SCR-499-A

No. of boxes: 23	Dimensions				Shipping weights		Weight of various items (lb)[2]
Contents	Length (inches)	Width (inches)	Height (inches)	Cubic feet	Gross (lb)	Net (lb)	
BOX NO. 1	38	34	47	35.1	755	497	
1 Transmitter BC-610-E	32 5/8	21 3/8	39 7/8				452
1 Cord CD-763							
1 Cord CD-764							
BOX NO. 2	59	25	35	30.2	560	292	
1 Chest CH-120-A[1]	50 1/2	16 3/4	23 1/4				286
BOX NO. 3	39	23	30	15.5	340	162	
1 Chest CH-121-A[1]	31	16 3/4	23 1/4				155
BOX NO. 4	31	16	21	6	125	48	
1 Antenna Tuning Unit BC-939-A	23 1/2	11 1/4	15 1/4				48
BOX NO. 5	85	23	19	21.4	492	330	
1 Chest CH-89-A[1]	80	18 1/4	14 11/16				300
BOX NO. 6	31	12	14	3	140	101	
1 Chest CH-109-A with:	25 1/2	9 5/8	11 3/8				101
2 6-volt batteries							
BOX NO. 7	49	18	23	11.7	292	196	
1 Chest CH-112-B with:	43 13/64	13 5/8	18 3/16				196
Cords CO-335, CD-659, CD-652, CO-313							
BOX NO. 8	21	19	16	3.7	74	34	
1 Mast Base Bracket MP-59-A							
1 Antenna plate							
10 Fastener assemblies							
Linoleum							
1 Base heater mounting							
1 Base rectifier mounting							
1 Strap							
1 Ground lead assembly							
Copper rope							
1 Concentric lead							
Miscellaneous hardware							
BOX NO. 9	40	18	8	3.3	86	28	
1 Fire extinguisher	13 1/2[3]	4 1/2[4]	18 1/2				17 1/4
1 Holder, for extinguisher							
3 Seat bench backs							
BOX NO. 10	27	15	12	2.8	89	57	
2 Mast Base Brackets MP-50-A							
1 Mast Base MP-47-A							
2 Mast Base MP-48 (assembled)							
BOX NO. 11	31	18	17	5.4	111	42	
1 Electric heater	12 1/2	11 1/2	12				17 1/4
1 Rectifier RA-63-(*)	13 1/2	9 1/2	7 1/2				29 1/4
BOX NO. 12	24	20	17	4.4	75	31	(see box No. 16, Reels DR-4).
1 Frame FM-59							
1 Bumper clamp							
BOX NO. 13	33	25	25	11.8	153	75	
7 Seat bench cushions							
6 Covers (chest and transmitter)							
BOX NO. 14	63	26	19	17.5	343	175	
1 Chest CH-88-A[1]	58	12 3/8	19 1/2				165
BOX NO. 15	63	19	40	27.3	453	236	
1 Chest CH-119-B	57	12 3/4	32 13/16				287
BOX NO. 16	26	17	24	6	229	165	
2 Reels DR-4 (with wire)							190

[1] See table I for list of equipment installed in chest.
[2] Approximate weight of item when set up for use.
[3] Length of nozzle attachment.
[4] Diameter of tank.

Table II. Typical packing list for radio set SCR–499–A (contd)

No. of boxes: 23	Dimensions				Shipping weights		Weight of various items (lb)[2]
Contents	Length (inches)	Width (inches)	Height (inches)	Cubic feet	Gross (lb)	Net (lb)	
BOX NO. 17 6 Gasoline cans (5 gal)	31	22	21	7.8	120	60	
BOX NO. 18 7 Mast Sections MS–44–A 1 Canvas Cover BG–176	70½ (Packed in Roll BG–176)	10¼	6¾	2.6	75	47	47
BOX NO. 19 7 Mast Sections MS–44–A 1 Canvas Cover BG–176	70½ (Packed in Roll BG–176)	10¼	6¾	2.6	75	47	47
BOX NO. 20 7 Mast Sections MS–44–A 1 Canvas Cover BG–176	70½ (Packed in Roll BG–176)	10¼	6¾	2.6	75	47	47
BOX NO. 21 1 Power Unit PE–95–( ) 3 Gas can spouts 1 Cord CO–316 1 Set running spares 2 6-volt batteries	80 67½	35 28¼	48 38½	78	2190	1600	1556
BOX NO. 22 1 Canvas Cover BG–102–A 3 Guy GY–24–A 12 Insulators IN–82–A 18 Stakes GP–2 3 Mast Base MP–19 9 Guy Plate MP–20 6 Guy GY–22–A	20¼ (Packed in Bag BG–102–( ))	18¼	13¼	2.7	97	73	23
BOX NO. 23 1 Cord CD–1290 Wire W–28, 250 ft 2 Reel RL–29 12 Guy GY–41 1 Steel tape, 100-ft 2 Instruction sheets for doublet antenna kit 1 Bag BG–102–( )	20¼ (Packed in Bag BG–102–( ))	18¼	13¼	2.7	55	31	31

[2] Approximate weight of item when set up for use.

29. Installation of Radio Set SCR–399–A

a. MOBILE INSTALLATION. If Radio Set SCR–399–A is to be used as a mobile station, Shelter HO–17–A should be installed on a 2½-ton, 6 x 6, cargo truck. (See fig. 1.) The following procedure for setting up the radio set for mobile use is recommended:

(1) Remove the canvas cover, roof bows, and side framing from the truck; drop the tail gate.

(2) With all equipment installed, the shelter weighs about 2¼ tons. If a suitable hoist is available, lift Shelter HO–17–A by its four lifting straps (fig. 23) and place it on the truck body so that the entrance door is toward the rear. If no hoist is available, some other method must be devised for raising the shelter to truck level and sliding it on to the truck. This work is easier if the heavy items of radio equipment are first removed from the shelter, as explained in paragraphs 189 and 190.

(3) Attach the hold-down clamps (two on each side of the shelter) to the truck body sides to hold the shelter firmly in place. If the cargo truck has a wooden body, bolt on the four clamp anchors. (See *Parts List for Shelter HO–17–A*.)

(4) Place Antenna Tuning Unit BC–939–A on top of the transmitter and fasten it in position.

(5) Bolt Mast Base Brackets MP–50–A with Mast Bases MP–48 to the rear of the shelter. (See fig. 26.) Attach the short external lead wire between the mast bases and the lead-in bushings. Bolt Mast Base MP–47–A in place on the roof of the shelter and attach the antenna lead wire between the binding post on the mast base and the binding post at the rear of Antenna Tuning Unit BC–939–A. For information on assembling the antennas, see paragraph 33.

(6) Attach the bumper bracket for Cord CO–335 to the left-hand bumper at the rear of the truck. Do not drill holes in the truck. If the truck body is wooden, chip a small amount of

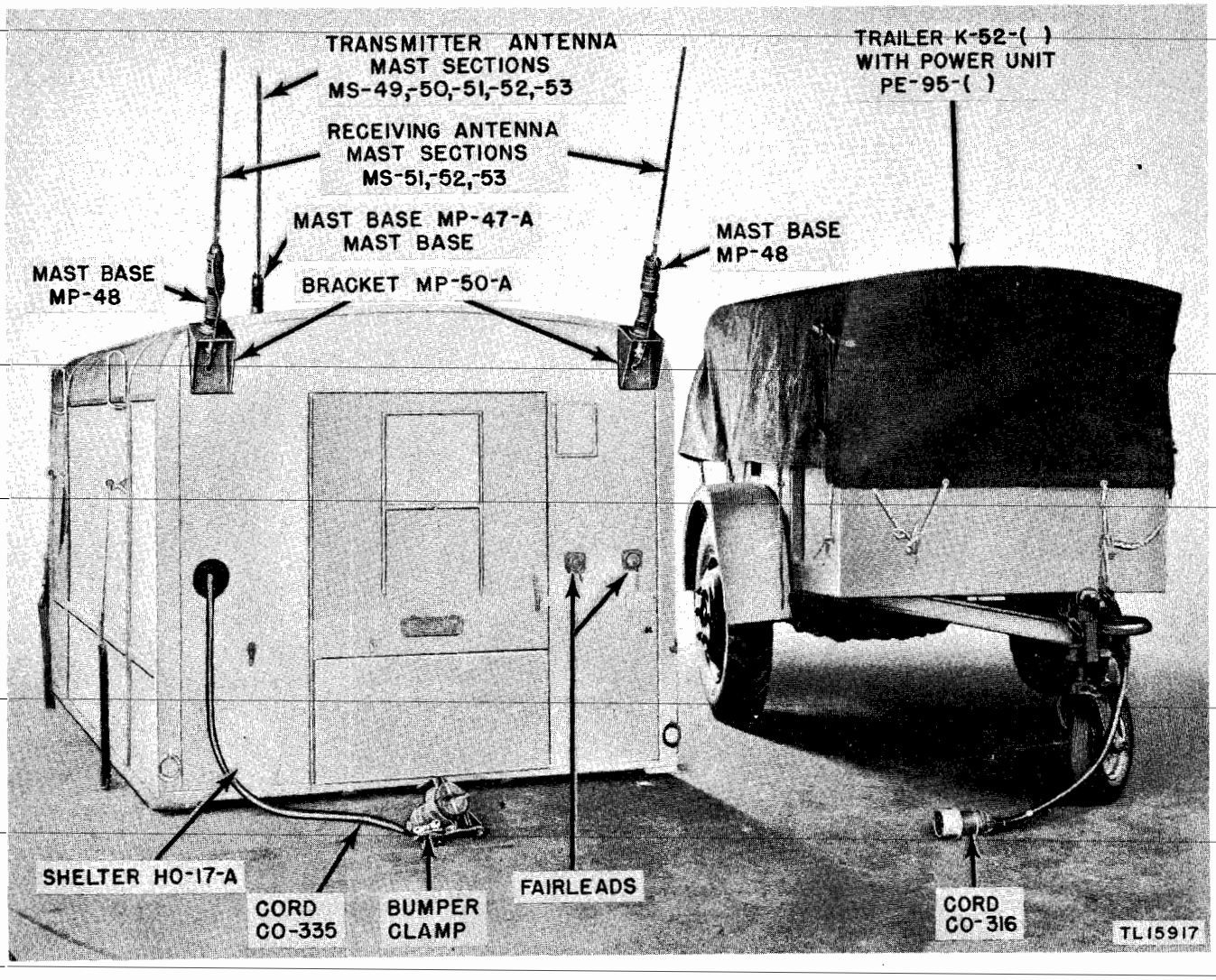

Figure 26. Shelter HO–17–A and Trailer K–52–( ), whip antennas, Cord CO–335, and Cord CO–316 installed.

wood from the floor beam which extends over the bumper. (See fig. 27.)

(7) Extend Cord CO–335 through the hole and clamp in the rear of the shelter. Bring the outer plug down behind the truck body and clamp it into the bumper bracket. (See figs. 26 and 27.)

(8) Attach the flexible section of the speaking tube to the fitting at the front of the shelter, and route the speaking tube into the left-hand truck window. (See fig. 28.) Hook the speaking tube mouthpiece inside the truck cab where it will be convenient to the driver.

(9) Attach one end of the ground strap to the terminal at the front of the shelter. If the truck has a metal body, bolt the other end of the ground strap to the nearest available point. If the truck has a wooden body, run the ground strap to the nearest point on the metal chassis and clamp it securely. (See fig. 28.) Connect an additional ground strap between the stud at the rear of the shelter and the steel frame of the truck.

(10) Couple the trailer to the rear of the truck and plug Cord CO–316 into the receptacle clamped in the bumper bracket.

b. FIXED INSTALLATION. If the shelter and trailer are to be used in a fixed location, the truck will not be necessary and may be released for other uses. In this case, the procedure for installation is as follows:

(1) If possible, select a site for the shelter in accordance with the instructions given in paragraph 26. Raise the shelter above the ground and block it in position.

(2) Place the trailer in any convenient position near the shelter. By proper use of the extension cords (par. 56), the trailer may be placed at a distance of up to 200 feet from the shelter.

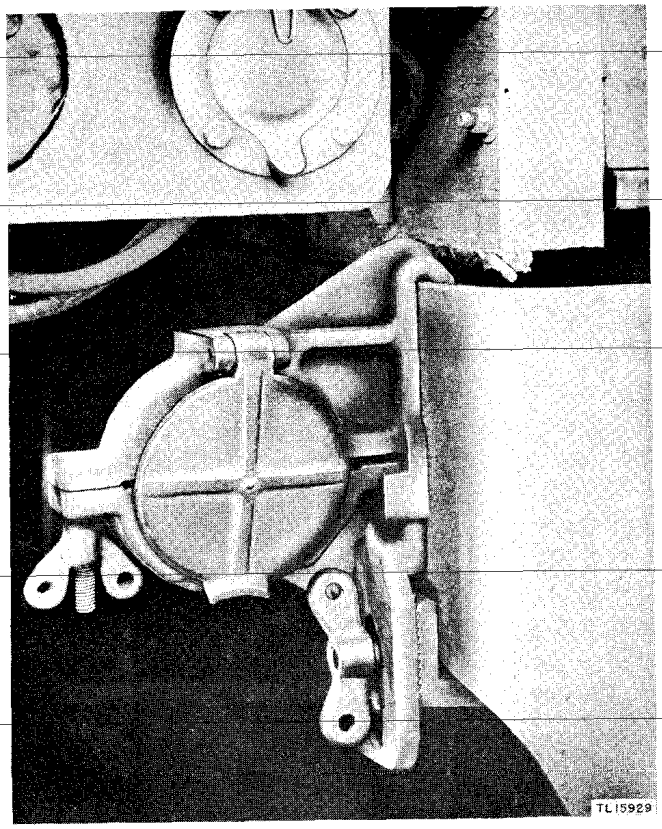

Figure 27. Bumper bracket attached to rear of truck.

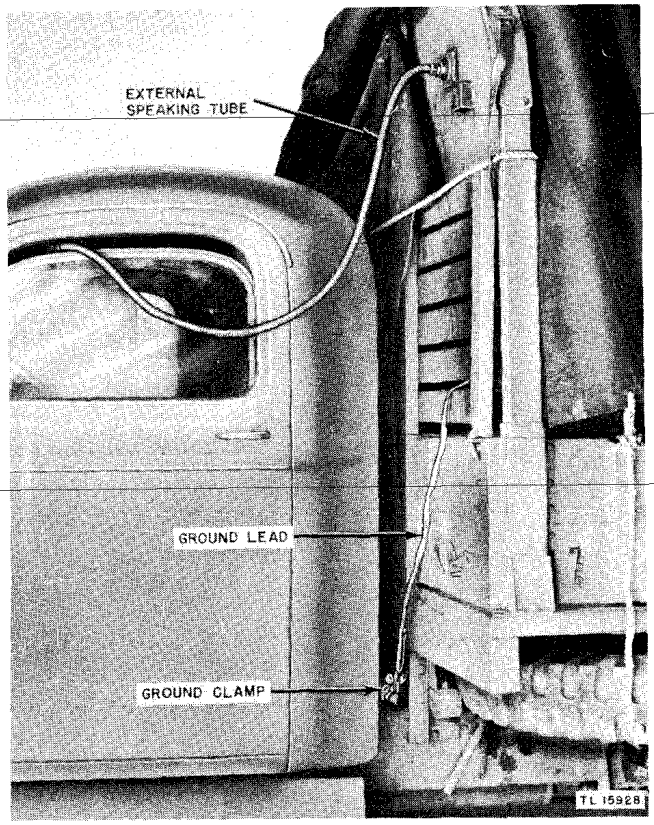

Figure 28. Speaking tube and ground lead from Shelter HO–17–A to truck.

(3) See FM 5–20 and apply camouflage to the shelter and trailer as required.

(4) Follow the instructions given in *a*(4) and (5) above.

(5) Connect Counterpoise CP–15–B to the ground binding post at the front of the shelter. Lay the counterpoise on the ground and fan out the individual conductors.

(6) Bring Cord CO–335 out through the clamp in the rear of the shelter.

(7) Connect Cord CO–316 to Cord CO–335 directly, or through extension cords.

30. Installation of Radio Set SCR–499–A

a. GENERAL. (1) If possible, provide protection from the weather by setting up the equipment in a tent or shed. If Radio Set SCR–499–A is set up in the open, every precaution should be taken to protect the transmitter from rain and dirt. The major components are provided with canvas covers which should be used to protect them from the weather.

(2) Components supplied with Radio Set SCR–499–A are listed in paragraph 5. Use figure 2 as a guide in placing the various components, so that the interconnecting cords will reach from one to the other as required.

b. TRANSMITTER. Set up the transmitter with the antenna tuner fastened in place as shown in figure 5. If the installation is made on bare ground, raise the transmitter above the ground and block it on wooden skids or planks to keep the base dry.

c. TRANSMITTING ANTENNAS. (1) *Long wire antenna.* If a long wire antenna is used, choose the best length for the operating frequency. (See table IV.) Insert an antenna insulator between the outer end of the wire and the rope used to anchor it to a tree or other convenient support. Keep the antenna as high and free of surrounding objects as possible. Attach a lead-in to the antenna binding post on Antenna Tuning Unit BC–939–A.

(2) *Whip antenna.* Mount Mast Base Bracket MP–59–A on the rear of the transmitter by hooking it to the bolts which hold the antenna tuning unit in place. Mount Mast Base MP–47–A in the mast bracket and insert the five-section whip antenna consisting of one each Mast Sections MS–49 to MS–53, inclusive. For detailed instructions on assembling the transmitting whip antenna, see paragraph 33.

(3) *Doublet antenna.* For information on the

installation and use of the doublet antenna, see section II, chapter 4.

d. OTHER OPERATING COMPONENTS. (1) Set up the following components as shown in figure 2:

(*a*) Chest CH–120–A, CH–121–A, and CH–109–A.

(*b*) Rectifier RA–63–(*).

(*c*) Electric heater and blower, if necessary.

(2) Choose a suitable point within reach of the power extension cords provided with the set, and set up Power Unit PE–95–( ) in accordance with the instructions in TM 11–904.

(3) Set the accessory components (Chests CH–89–A, CH–119–B, and CH–88–A) out of the way until the connections and interconnections have been made (par. 32); then place these components convenient to the operating positions, as shown in figure 2.

31. Connections and Interconnections of Radio Set SCR–399–A

When shipped, the operating components of Radio Set SCR–399–A are completely installed, mounted, and interconnected. (See figs. 3 and 4.) Make a general inspection of the equipment and check with the cording diagram (fig. 155) to see that:

a. Power Unit PE–95–( ) is properly connected, both mechanically and electrically, to Shelter HO–17–A.

b. Receiver, speech-amplifier, and transmitter cords are properly plugged into their respective sockets.

c. All wingnuts, wing head bolts, turnbuckles, etc., are tight.

32. Connections and Interconnections of Radio Set SCR–499–A

a. After the components of Radio Set SCR–

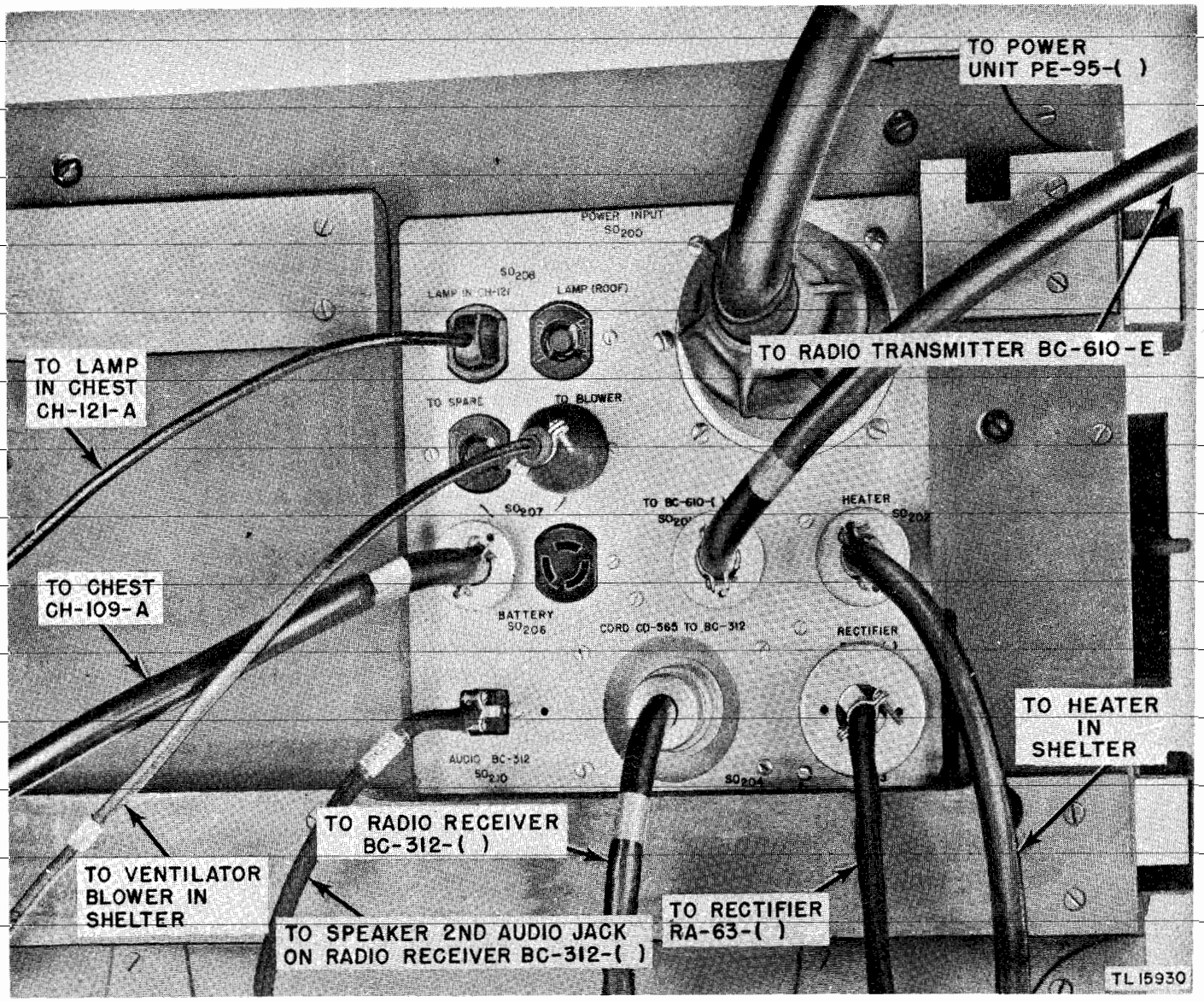

Figure 29. Cord connections through bottom of Chest CH–120–A to bottom of Junction Box JB–70–A.

499–A have been placed in their operating positions, use the cording diagram (fig. 155) and the bottom view of Chest CH–120–A (fig. 29) as guides for connecting:

(1) Cord CD–763 from the transmitter to Junction Box JB–70–A.

(2) Cord CD–764 from the transmitter to Speech Amplifier BC–614–E.

(3) Cord CD–659 from Chest CH–109–A to Junction Box JB–70–A.

(4) Cord CD–565 from Radio Receiver BC–312–( ) to Junction Box JB–70–A.

(5) Cord from Rectifier RA–63–(*) to Junction Box JB–70–A.

(6) Cords from the blower and the heater to Junction Box JB–70–A, if these two items are needed.

(7) Cord CD–564 from Radio Receiver BC–342–( ) to the Junction Box JB–70–A.

(8) Cord CD–566 from Radio Receiver BC–342–( ) to the Junction Box JB–70–A.

(9) Cord CX–140/MRQ–2 (auxiliary audio) from Chest CH–121–A to Junction Box JB–70–A.

(10) Cord CX–141/MRQ–2 from Junction Box JB–70–A to Speech Amplifier BC–614–E.

(11) Cord CX–143/MRQ–2 from Radio Receiver BC–342–( ) to Junction Box JB–70–A.

(12) All key, loudspeaker, and lamp cords, as required.

(13) Cord CO–335 to Junction Box JB–70–A.

(14) Cord CO–316 from Power Unit PE–95–( ) to Cord CO–335, directly or through extension cords, as required.

b. Connect Counterpoise CP–15–B to the ground binding post of the transmitter. Lay the counterpoise on the ground and fan out the individual conductors.

33. Installation of Antennas on Radio Set SCR–399–A

a. Select the following items from Chest CH–89–A. (1) One Mast Section MS–49.

(2) One Mast Section MS–50.

(3) One Mast Section MS–51, to which a metal S-link has been attached (for guying down the transmitter antenna).

(4) Two Mast Sections MS–51.

(5) Three Mast Sections MS–52.

(6) Three Mast Sections MS–53.

(7) Insulated guy ropes for the transmitting antennas.

(8) Two insulated guy ropes for the receiving antennas.

b. Assemble the transmitting antenna (fig. 26) as follows:

(1) Screw Mast Section MS–49 into Mast Section MS–50. Use two pairs of gas pliers to tighten the connection. Tape the joint with ½-inch friction tape.

(2) Repeat this procedure with Mast Sections MS–51, MS–52, and MS–53.

Note. Any mast section with a *lower* number is above that with a *higher* number.

(3) Carry the guy rope and the assembled antenna sections onto the shelter roof, and screw Mast Section MS–53 into Mast Base MP–47–A.

(4) Attach the catches at the rope end of each guy rope to the holes in the corners of Mast Base Brackets MP–50–A.

(5) With hand outstretched at shoulder height, stand at the center of the roof and bend the antenna backwards to a horizontal position.

(6) Hold the antenna down in this position, walk to the rear of the roof, and with the other hand pick up the insulator end of the guy rope and attach it to the S-link on Mast Section MS–51.

c. Assemble the left-hand receiving antenna (fig. 26) as follows:

(1) Screw Mast Section MS–51 into MS–52. Use two pairs of gas pliers to make the connection tight. Tape the joint with ½-inch friction tape.

(2) Screw Mast Section MS–53 into Mast Section MS–52.

(3) Screw Mast Section MS–53 into Mast Base MP–48 on the left rear corner of the shelter.

d. Assemble the right-hand receiving antenna by repeating steps *c*(1) and (2) above. Screw the assembled sections into Mast Base MP–48 on the upper right rear corner of the shelter.

e. Attach guy rope insulators to the receiving antennas. Tie the guy ropes to the rear corners of the truck or shelter.

f. Use these two guy ropes to pull the receiving antennas down when driving in a city or under low obstacles. (See fig. 1.) However, better reception will result with receiving antennas in the vertical position.

g. For information on the use of the doublet antenna, see section II, chapter 4.

34. Installation of Antennas on Radio Set SCR–499–A

a. Assembly and installation of the whip antennas for Radio Set SCR–499–A is the same as for Radio Set SCR–399–A (par. 33), but with the following exceptions:

(1) Mount the assembled transmitting antenna in Mast Base Bracket MP–59–A, which is hooked to the transmitter.

(2) Put the two assembled receiving antennas into their respective antenna receptacles on Chests CH–120–A and CH–121–A. (See fig. 2.)

(3) Use the antennas in their vertical positions.

b. For information on the use of the doublet antenna, see section II, chapter 4.

35. Installation of Dry Batteries

a. Telephones EE–8–( ), Frequency Meter SCR–211–( ), and Analyzer BC–1052–E require dry batteries as listed below:

Component	*Batteries*
Telephone EE–8–( )	2 BA–30
Frequency Meter Set SCR–211–( )	6 BA–2
	4 BA–23
Analyzer BC–1052–E	1 No. 2 dry cell
	2 BA–34 (7½-volt, "C")

b. To install or replace dry batteries, carefully follow the instructions in the technical manual or instruction sheet issued with each component.

36. Placing Storage Batteries in Service

Caution: If electrolyte spills on skin or clothing, wash off immediately with cold water. Apply bicarbonate of soda or ammonia to the affected parts, if available.

a. INSTRUCTIONS. Examine the storage batteries for Chest CH–109–A and Power Unit PE–95–( ). A card attached to each battery gives the manufacturer's instructions for preparing that battery for service. READ THE MANUFACTURER'S INSTRUCTIONS AND FOLLOW THEM CAREFULLY.

b. EXAMPLE. The following is an example of the information which appears on a manufacturer's instruction card:

(1) This battery is of the dry-charged type.

(2) The electrolyte to be used is diluted sulphuric acid having a specific gravity of 1.256 at 80° F. It is packed in a separate container. In tropical climates, use electrolyte having a specific gravity of 1.200, produced by mixing 10 parts of the 1.265 electrolyte with 3 parts of water. Be sure to use distilled water, or other water known to be suitable for use in a lead-acid storage battery.

Caution: Never add the water to the acid.

(3) Remove the vent caps. Remove and destroy the scotch tape which covers the vent holes. Fill each cell with the correct electrolyte to a level ⅜ inch above the tops of the separators. Replace the vent caps and tighten securely.

Caution: Do not put cold electrolyte into a warm battery, or warm electrolyte into a cold battery. Severe damage will result.

(4) If the battery is filled with 1.200 electrolyte for tropical use, stamp the numeral 1 on the lead top connector at the positive cell, for the information of anyone servicing the battery in the future.

(5) Before placing the battery in service, allow it to stand from 4 to 12 hours after filling.

Note. In an emergency, the battery may be placed in service 1 hour after it has been filled with the proper electrolyte. *This is not good practice.*

(6) If possible, give the battery a freshening charge at 6.0 amperes for 16 to 20 hours before placing it in service. It will give satisfactory results without this charge if the battery temperature is above 50° F. If the battery temperature is below 50° F., it *must* be given a freshening charge.

37. Repacking

a. The components of Radio Set SCR–499–A can be quickly disconnected to dismantle the station into a number of relatively small items for transport by aircraft or other suitable conveyance.

b. The circumstances of field transportation differ widely and, therefore, no definite repacking procedure can be given. The following procedure is recommended as a guide for preparing Radio Set SCR–499–A for field transportation.

(1) Set the accessory Chests CH–119–B, CH–89–A, and CH–88–A where they can be repacked conveniently as their original contents are removed from the set.

(2) Remove the seat cushions and backs

from Chest CH–89–A and tie them into a secure and compact bundle.

(3) Disconnect the set cording, keys, lamps, and other small components from the set.

(4) Pack each of these items in the accessory or operating chests as indicated in the contents chart of each chest.

(5) Remove and disassemble the transmitting and receiving antennas.

(6) Pack the antenna mast sections in Chest CH–119–B.

(7) If possible, place protective wrappings about the heater, fire extinguisher, Rectifier RA–63–(*), and other components for which there is no space in the chests. These items are usually handled separately. (See fig. 17.)

(8) Before closing and locking the chests, stuff any available filler into compartments that require such material to prevent damage to their contents.

(9) Cover the components for which canvas covers are provided.

(10) Repack the doublet antenna components in their original shipping bags.

(11) Carefully store and secure the repacked components in the conveyance being used for transporting the equipment.

Note. For emergency field transportation, Radio Set SCR–399–A can be removed from Shelter HO–17–A. (See pars. 189 and 190.)

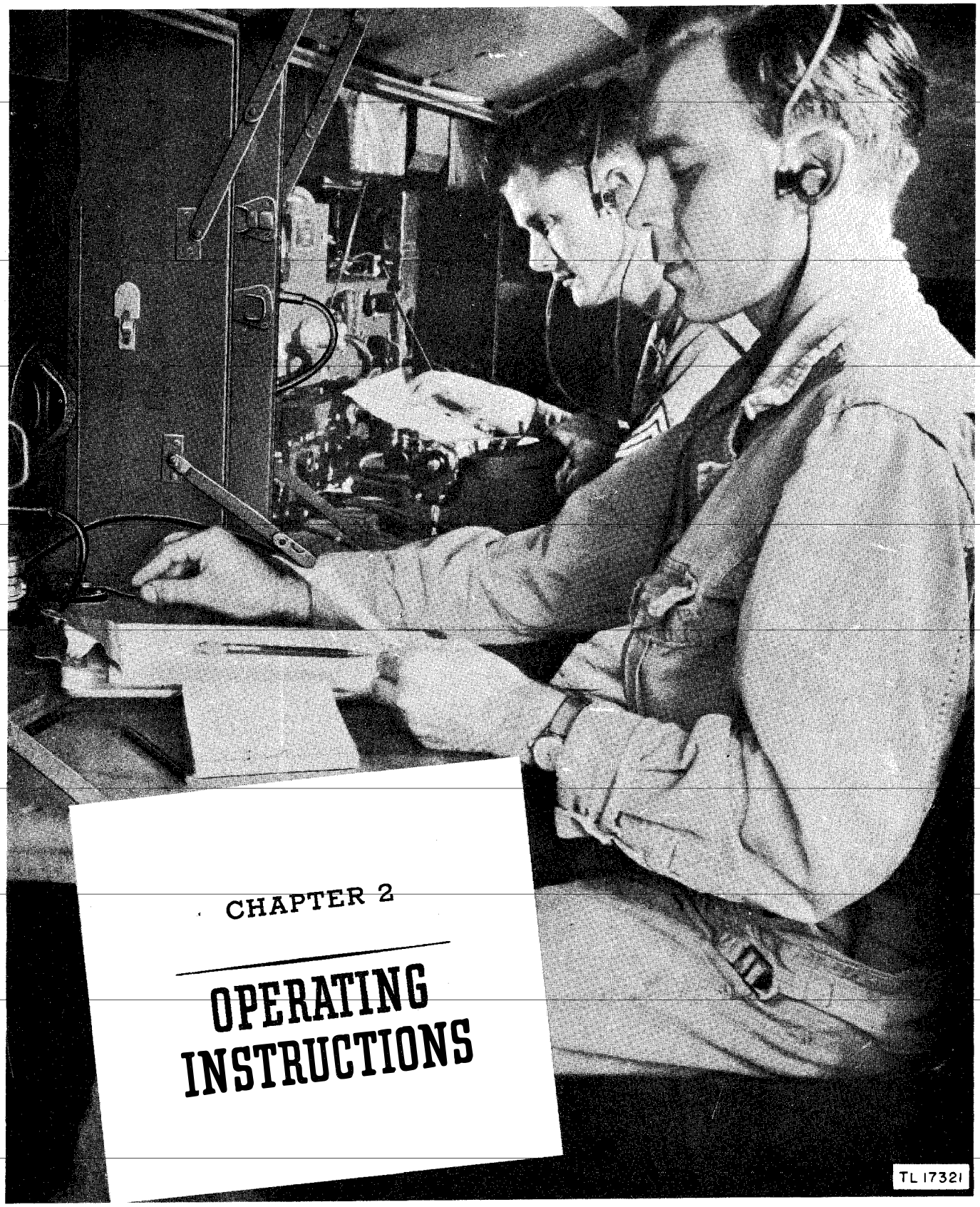

CHAPTER 2

OPERATING INSTRUCTIONS

CHAPTER 2

OPERATING INSTRUCTIONS

Note. For information on destroying the equipment to prevent enemy use, see destruction notice at front of manual.

Section I. CONTROLS AND THEIR USE

38. General

The controls of Radio Sets SCR-399-A and SCR-499-A are described in this section. A series of line drawings, keyed to the text, are used to illustrate the controls and to show their location on the equipment.

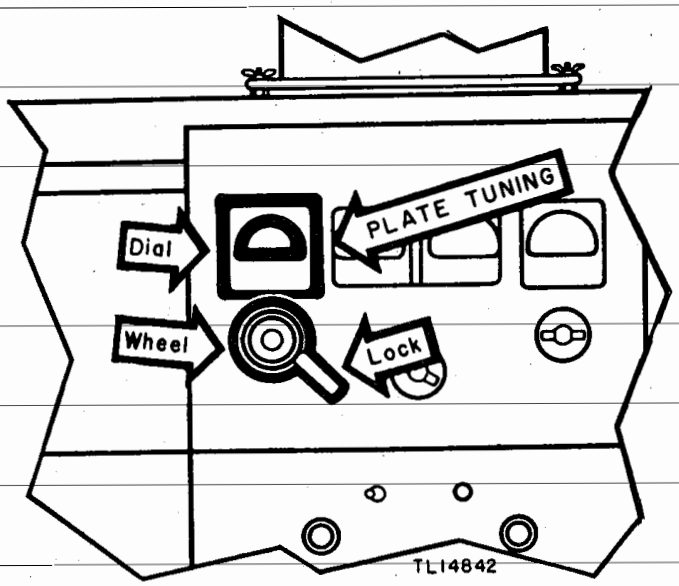

39. Transmitter Controls

a. PLATE TUNING dial is used in conjunction with the TUNING CHARTS to determine an approximate setting for the PLATE TUNING wheel.

b. PLATE TUNING wheel controls the tuning of the p-a (power-amplifier) tank circuit. Its position is registered on the PLATE TUNING dial directly above. The lock holds the PLATE TUNING wheel securely in position.

c. P. A. PLATE meter measures the current in the p-a plate circuit, thus indicating correct tuning of the p-a stage.

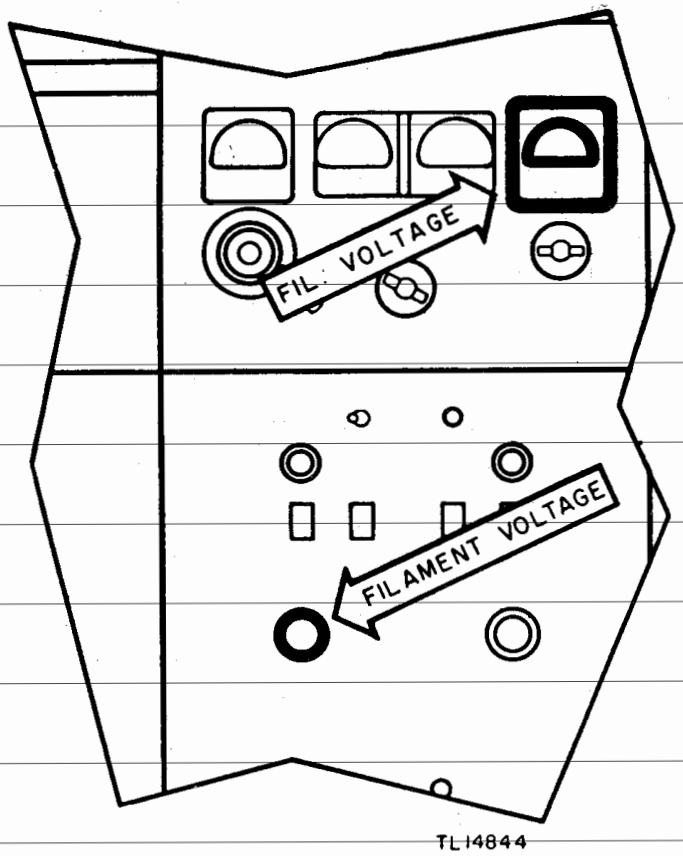

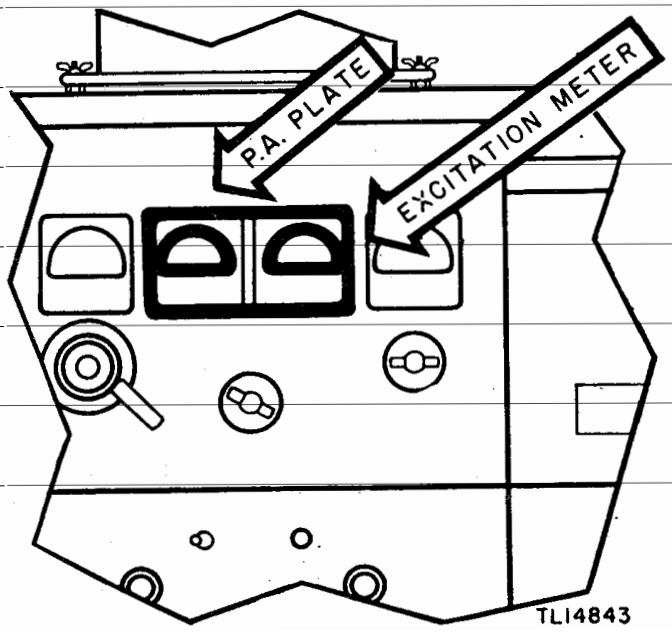

d. EXCITATION METER is a multiple-scale milliammeter which measures the current and thus indicates the degree of resonance in the doubler plate circuit, the i-p-a (intermediate-power-amplifier) grid or plate circuits, or the p-a grid circuit, depending upon the position of the EXCITATION METER SWITCH.

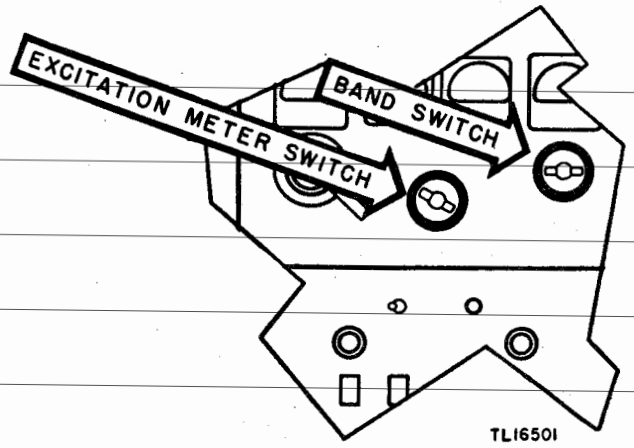

e. FIL. VOLTAGE meter measures the p-a filament voltage which is determined by the setting of the FILAMENT VOLTAGE control knob.

f. EXCITATION METER SWITCH has four positions to place the EXCITATION METER in any one of the following circuits: DOUBLER PLATE, INT. AMP. GRID, INT. AMP. PLATE, or P. A. GRID.

g. BAND SWITCH has three positions to connect any one of three tuning units into the transmitter.

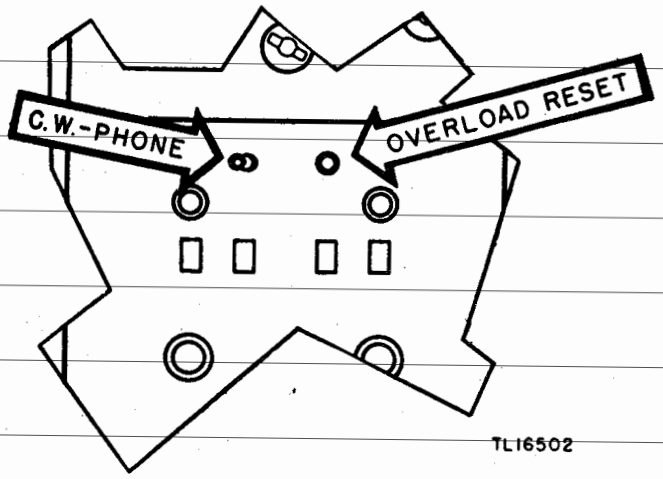

h. C.W.-PHONE switch has two positions, C.W. and PHONE. In the C.W. position, full power is applied to the transmitter and the modulator is thrown out of the transmitter circuit. In the PHONE position, reduced power is applied to the transmitter and the modulator is connected in the transmitter circuit.

i. OVERLOAD RESET switch, a push-button, resets the overload relay when it has been tripped by an overload in the p-a or modulator stage.

j. FILAMENT POWER switch in the ON position applies power to the filaments of all tubes in the transmitter and speech amplifier, and to the speech-amplifier and bias power-supply plate circuits. A green pilot lamp is lighted when this switch is in the ON position.

k. EXCITER PLATE POWER switch has two positions, ON and NORMAL (OFF). In the ON position, this switch applies power to the

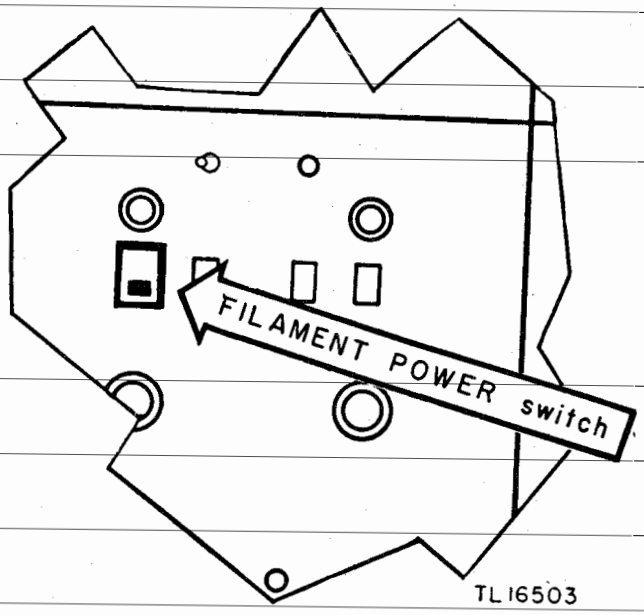

plate circuits of the oscillator; the buffer-doubler, and the intermediate power amplifier. In the NORMAL position, the plate power is removed from these circuits until the key or the microphone switch is depressed.

l. HIGH VOLTAGE PROTECT switch has two positions, PROTECT and NORMAL. In the PROTECT position, the transmitter can be operated only with reduced power. Full power can be applied to the transmitter with this switch in the NORMAL position.

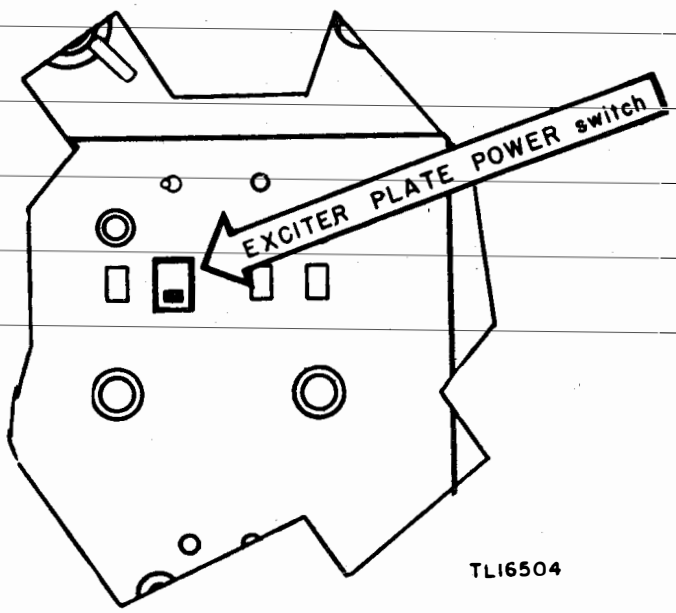

m. PLATE POWER switch is to be used only in emergency or during servicing when the transmitter is away from the other equipment.

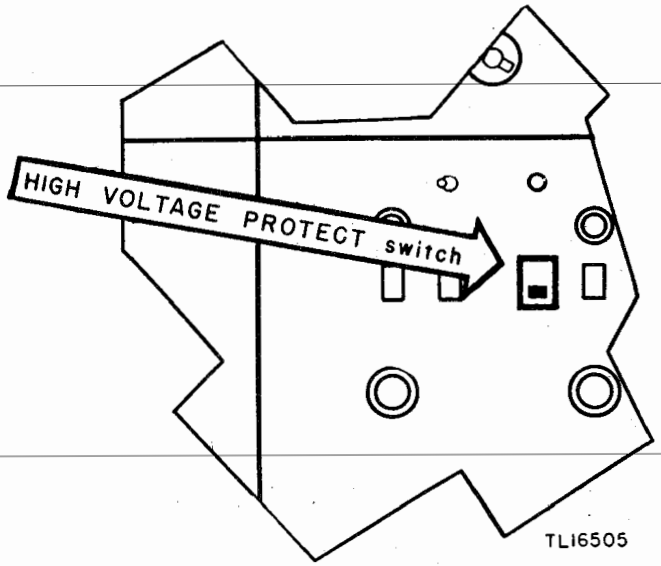

This switch has two positions, ON and OFF. In the ON position, plate power is applied to all tubes in the transmitter which had not been previously turned on by the FILAMENT POWER switch. A red pilot lamp above this switch lights when plate power is applied.

Caution: The receiver disabling circuits are inoperable with this switch in the ON position; do not key the set under this condition.

n. FILAMENT VOLTAGE control adjusts the filament voltage of all tubes in the transmitter except the bias rectifier and the drivers. The circuits are so arranged that a FIL. VOLTAGE reading between 5.0 and 5.3 volts will insure correct filament voltage to all other tubes.

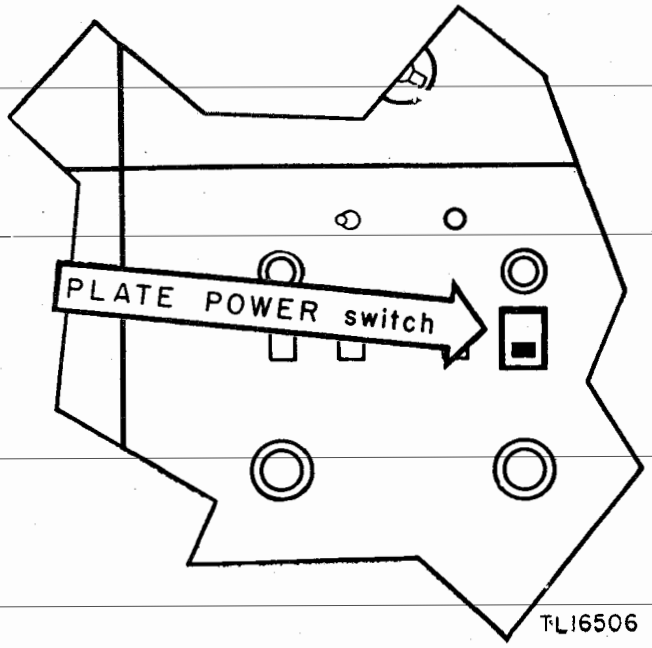

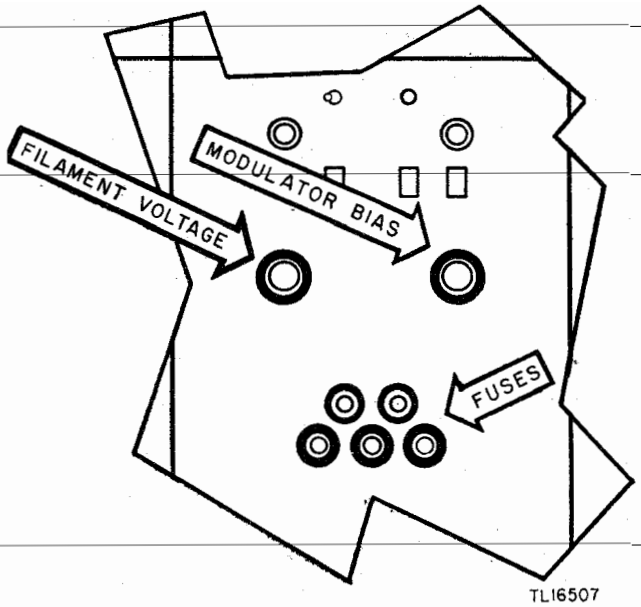

o. MODULATOR BIAS control adjusts the output of the bias rectifier and, therefore, of the modulator tubes.

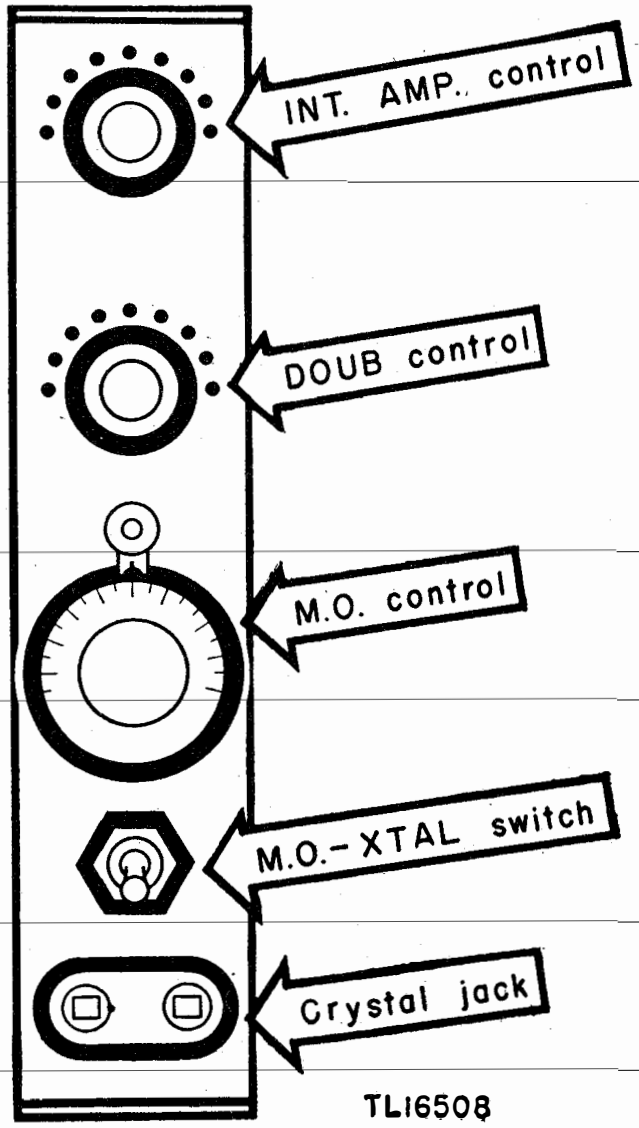

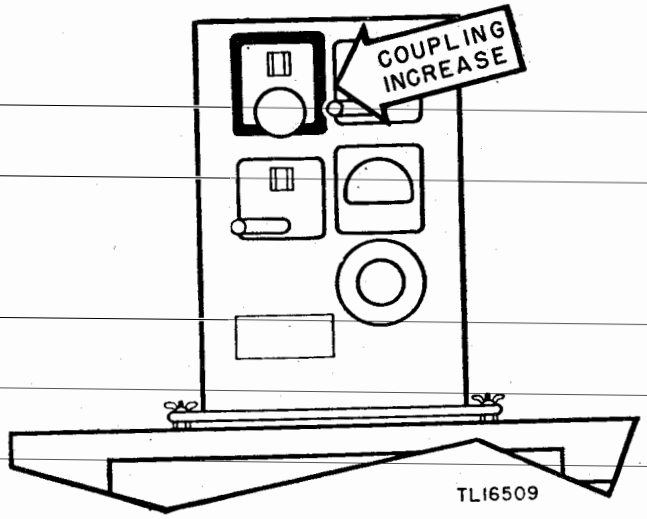

p. FUSES FS_1, FS_2, FS_3, FS_4, and FS_5 are located on the front panel of the transmitter. FUSES FS_1 and FS_2 are line fuses. FUSE FS_3 is in the primary of transformer T_6. FUSE FS_4 protects transformers T_2, T_3, T_4, and T_5; relays RY_1, RY_2, RY_3, and RY_4; and lamp LM_3. FUSE FS_5 protects transformer T_1 and the primary of the speech-amplifier power supply.

40. Tuning Unit Controls

a. The crystal jack is a two-pin receptacle to accommodate a Crystal Holder FT–171–B containing a crystal within the frequency range of the tuning unit.

b. M.O.-XTAL switch is thrown to the M.O. position for m-o (master-oscillator) operation and to the XTAL position for crystal-controlled operation.

c. M.O. control determines the frequency of the master oscillator. Calibrations on the dial of this control permit it to be set to any frequency within its range through reference to the tuning chart.

d. DOUB control is used to tune the buffer-doubler tank circuit to resonance with the signal from the oscillator. An approximate setting for this control can be obtained from the tuning charts.

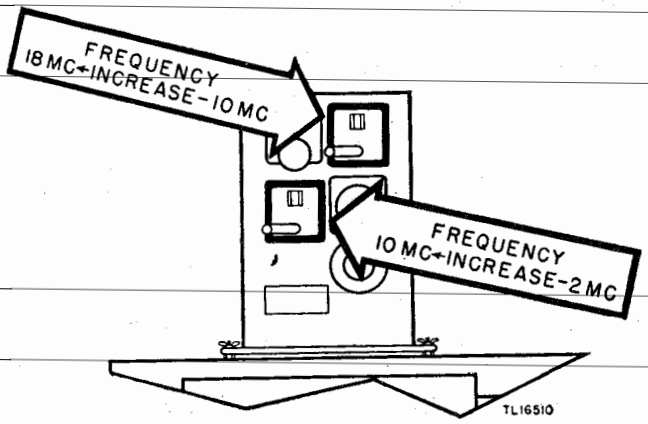

e. INT AMP control is used to tune the i-p-a tank circuit to resonance with the signal from the buffer-doubler. An approximate setting for this control is also found on the tuning charts.

41. Antenna Tuning Unit Controls

a. COUPLING INCREASE control is an antenna-coupling adjustment knob. The setting of this knob is determined from the tuning charts and is read on counters directly above the knob.

b. FREQUENCY 18MC–INCREASE–10MC control is the high-frequency tuning adjustment for the antenna. It is set approximately by the tuning charts and is read on counters directly above the control.

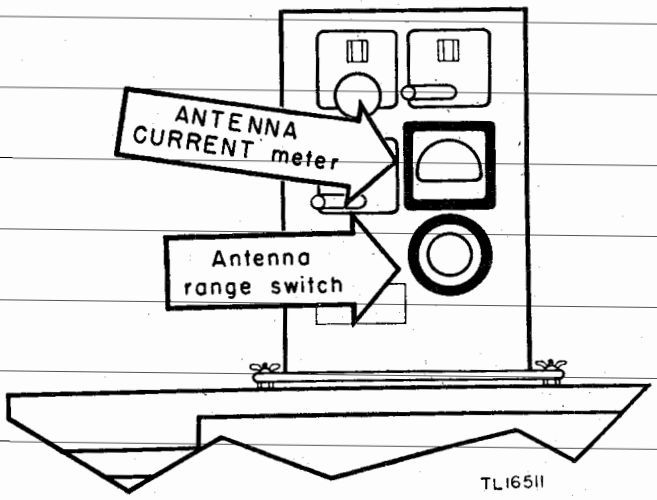

c. FREQUENCY 10MC–INCREASE–2MC control is the low-frequency tuning adjustment for the antenna. It is set approximately by the tuning charts and is read on counters directly above the control.

d. ANTENNA CURRENT meter, in series with the antenna coupling control, measures the r-f current in the antenna circuit.

e. Antenna range switch is marked 2–10MC LONG WIRE 10–18MC. In the 2–10MC position this switch matches the whip antenna to the low-frequency range of the transmitter. In the LONG WIRE position the antnena is so arranged that the transmitter will work on any frequency within its range into a long-wire antenna. In the 10–18MC position the switch matches the whip antenna to the high-frequency range of the transmitter.

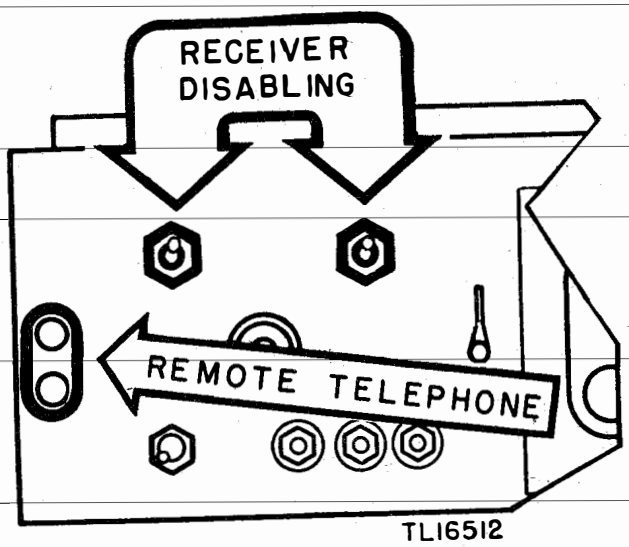

42. Junction Box JB–70–A Controls

a. REMOTE TELEPHONE terminals are for the connection of up to a mile of Wire W–110–B from remote Telephone EE–8–( ) or from remote Key J–45.

b. BC–312 RECEIVER DISABLING switch has two positions, marked ON and OFF. With this switch in the ON position, Radio Receiver BC–312–( ) SEND-RECEIVE switch in the SEND position, and the transmitter carrier on, disabling occurs as follows: The disabling short-circuits the receiver input connections to protect the antenna coils, and also short-circuits the loudspeakers to prevent acoustic feedback to the dynamic microphone. In the OFF position no power is applied to the antenna-disabling relay in the receiver, and the loudspeakers are not short-circuited; therefore, the receiver is operative at all times.

c. BC–342 RECEIVER DISABLING switch functions for Radio Receiver BC–342–( ) in the manner described above for Radio Receiver BC–312–( ).

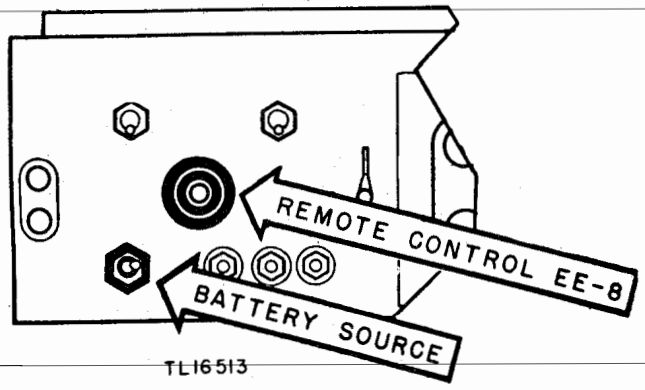

Caution: To avoid burning out the receiver input circuits, leave the RECEIVER DISABLING switches ON at all times. The only exception to this is in the monitoring of a frequency other than the transmitter frequency during transmission, in which case the corresponding RECEIVER DISABLING switch can be turned off. The RECEIVER DISABLING switch is to be turned OFF, however, only when the frequency to be monitored is considerably different from the transmitter frequency, and is not an harmonic of the transmitter frequency; otherwise, damage to the receiver will result.

d. REMOTE CONTROL EE–8 switch is set in the NORMAL position for operation from within the shelter. In the position marked TO BC–312 TELEPHONE, a remote operator can modulate the transmitter from Telephone EE–8–( ) (with main control switch in TRANS. ON position) and will hear the signals being picked up by Radio Receiver BC–312–( ) (with main control switch in REC. TO EE–8 position). In the position marked TO BC–312 TELEGRAPH, a remote operator can key the transmitter from Key J–45 (with main control switch in TRANS. ON position), and will hear the signals being picked up by Radio Receiver BC–312–( ) (with main control switch in REC. TO EE–8 position). The operator can similarly modulate and key the transmitter in the TO BC–342 TELEPHONE and TO BC–342 TELEGRAPH positions, but will hear the signals picked up by Radio Receiver BC–342–( ) when the main control switch is in REC. TO EE–8 position.

Note. If Radio Receiver BC–312–( ) is located at the remote position, the REMOTE CONTROL EE–8 switch should be left in the TO BC–312 TELEPHONE position for remote voice transmission and in the TO BC–312 TELEGRAPH position for remote keying.

e. BATTERY SOURCE switch at AUX. connects the 12-volt battery in Chest CH–109–A into Radio Receiver BC–312–( ) and into the radio station relay circuits. Some Power Units PE–95–( ) are provided with 12-volt terminals. With Cord CO–316 connected to these terminals, the 12-volt supply may be obtained from the power unit by setting the BATTERY SOURCE switch to PE–95.

f. Two KEY jacks, either of which may be used for keying the transmitter, are located on the front panel.

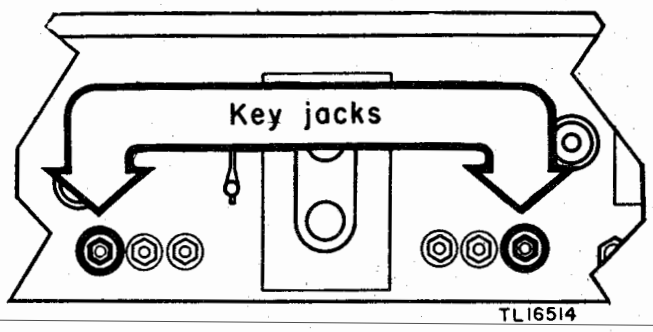

g. Two pairs of jacks marked HEADSETS are so arranged that either the left pair or the right pair may be connected to Radio Receiver

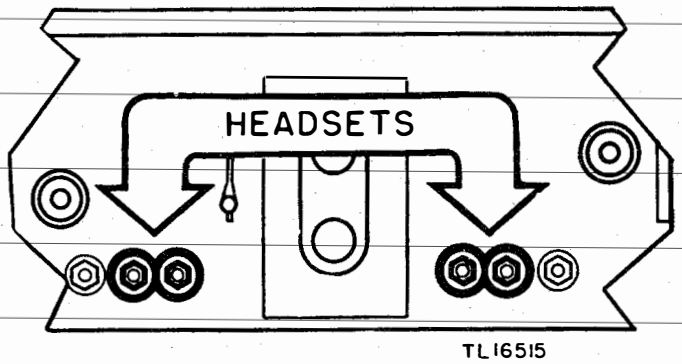

BC–342–( ). The alternate pair is connected to Radio Receiver BC–312–( ).

h. The main control switch is marked TRANS. ON, TRANS. OFF, REC. TO EE–8. In the TRANS. ON position, the transmitter may be keyed or modulated from either the operating position or from a remote location. In the

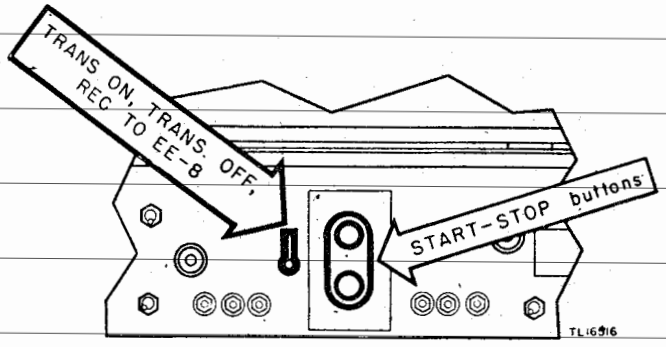

TRANS. OFF position, no keying or modulation of the transmitter may occur (except in emergencies when the transmitter PLATE POWER switch is turned ON). In the REC. TO EE–8 position (with the REMOTE CONTROL EE–8 switch other than NORMAL), the remote location can hear the signals being received in the shelter.

i. START-STOP buttons are remote controls for Power Unit PE–95–( ). Pressure on the START button applies current to the starting relay in the power unit, thus starting the engine. Pressure on the STOP button applies current to the stopping relay in the power unit, thus stopping the engine.

Note. In Power Units PE–95–( ) made by Ford, the button must be held down until the engine is started or stopped. In Power Units PE–95–( ) made by Willys, a holding relay performs this function, and once a button is depressed momentarily, it is held in automatically until the function is completed.

j. CIRCUIT BREAKER PUSH TO RESET button is used to return the transmitter a-c line circuit breaker to normal when it has opened through an overload in the transmitter circuit.

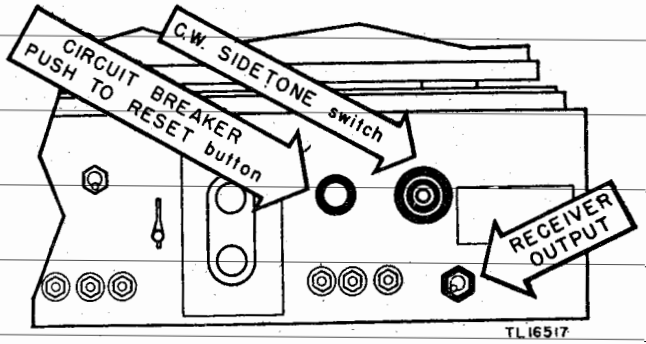

k. C.W. SIDETONE switch has three positions, marked TO BC–312, OFF, and TO BC–342. In the TO BC–312 position, sidetone from the transmitter is applied to the HEADSETS jacks on the left side of Junction Box JB–70–A panel and to the loudspeaker in Chest CH–21–A. In the OFF position, no sidetone is applied. In the TO BC–342 position, sidetone from the transmitter is applied to the HEADSETS jacks on the right side of Junction Box JB–70–A panel and to the loudspeaker in Chest CH–120–A. The same sidetone is applied to the remote telephone line in either TELEGRAPH position of REMOTE CONTROL EE–8 switch.

l. RECEIVER OUTPUT switch in the normal position connects the left HEADSETS jacks to Radio Receiver BC–312–( ) and the right HEADSETS jacks to Radio Receiver BC–342–( ). In the TRANSPOSED position the left HEADSETS jacks are connected to Radio Receiver BC–342–( ) and the right HEADSETS jacks are connected to Radio Receiver BC–312–( ).

43. Speech Amplifier BC–614–E Controls

a. CARBON MIC. 1 is the panel marking for a gain control and jack for Microphone T–17 or T–30. When using Microphone T–17 or T–30, plug it into the CARBON MIC. 1 jack and adjust the corresponding gain control as described in paragraph 51.

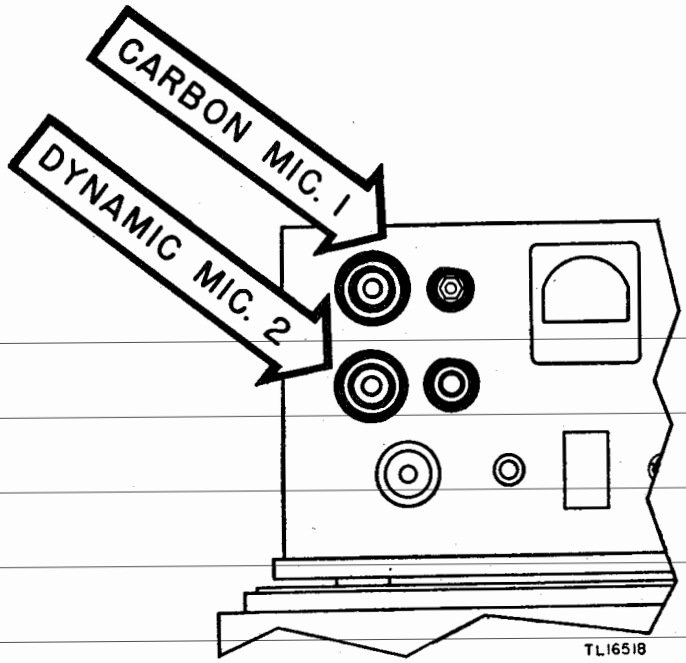

b. DYNAMIC MIC. 2 marks the location of the gain control and jack for Microphone T–50. This gain control is also used to control the output of Telephone EE–8–( ) when used in a remote position. The adjustment of the gain for Microphone T–50 and for remote Telephone EE–8–( ) is described in paragraph 51.

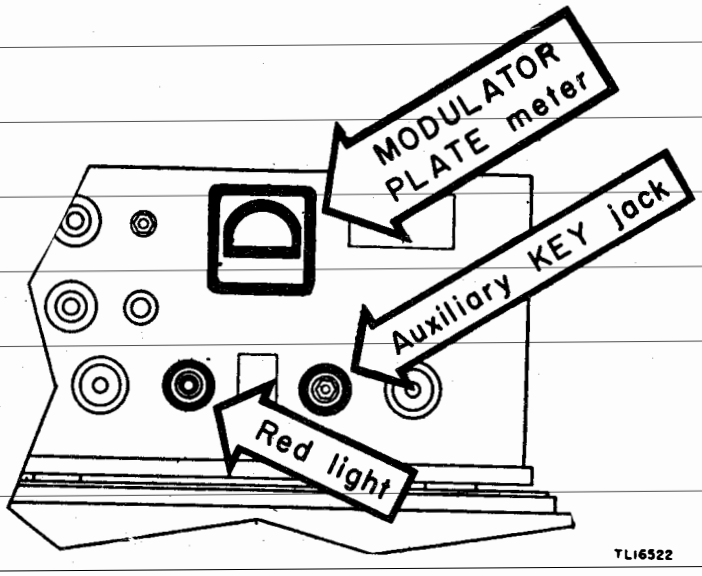

c. MODULATOR PLATE meter indicates the current in the plate circuit of modulator tubes V3 and V4. Its readings are controlled by the adjustment of the MODULATOR BIAS control on the transmitter panel and by adjustment of either microphone gain control on the speech-amplifier panel.

d. A red pilot lamp on the speech-amplifier panel is lighted when the transmitter FILAMENT POWER switch is in the ON position.

e. An auxiliary KEY jack on the speech-amplifier panel makes it possible to key the transmitter in emergencies.

Caution: The receiver disabling circuits are inoperative when this key jack is used. To avoid burning out the receiver input circuits, turn off the receivers during transmission from this key jack, or make sure that they are tuned to a frequency considerably different from the transmitted frequency but not to an harmonic of the transmitted frequency.

f. The eight-pin receptacle marked TO BC–610 is used to connect Cord CD–764 to the transmitter.

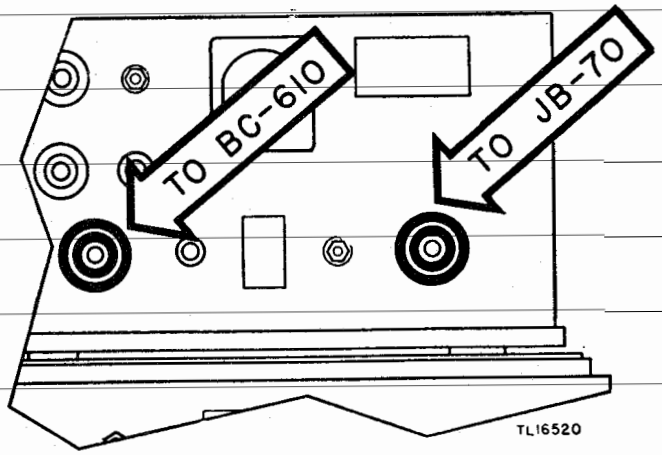

g. The eight-pin receptacle marked TO JB–70 is used to connect Cord CD–566 to Junction Box JB–70–A.

44. Junction Box JB–60–A Controls

a. LINE terminals are used to connect to Wire W–110–B (up to a mile in length) from the REMOTE terminals on Junction Box JB–70–A.

b. A KEY jack permits remote keying of the transmitter through the connecting field-wire line.

c. A cord marked EE–8 connects Telephone EE–8–( ) into Junction Box JB–60–A. The remote operator is thus able to modulate the transmitter and to hear the signals being received in the shelter.

45. Rectifier RA–63–(*) Controls

a. The rectifier main control switch has three positions marked TRICKLE, OFF, and HI CHARGE. In the TRICKLE position a low voltage is applied to the rectifier and enough charging current is supplied to the battery to

offset the load under operating conditions. In the OFF position no charge is applied to the battery. In the HI CHARGE position full voltage is applied to the rectifier with an accompanying high charging rate of the battery.

b. The button marked PUSH TO RESET is used to reset the circuit breaker if it has opened as a result of an overload.

Section II. TUNING

46. Preliminary Steps

a. SAFETY NOTICE. Reread the safety notice in front of book.

b. RECEIVER DISABLING. (1) Always leave RECEIVER DISABLING switches on Junction Box JB–70–A at ON.

(2) Always leave the SEND–REC. switches on Radio Receivers BC–312–( ) and BC–342–( ) at SEND.

c. GASOLINE TANKS. Never fill gasoline tanks of either truck or trailer when transmitter is in operation.

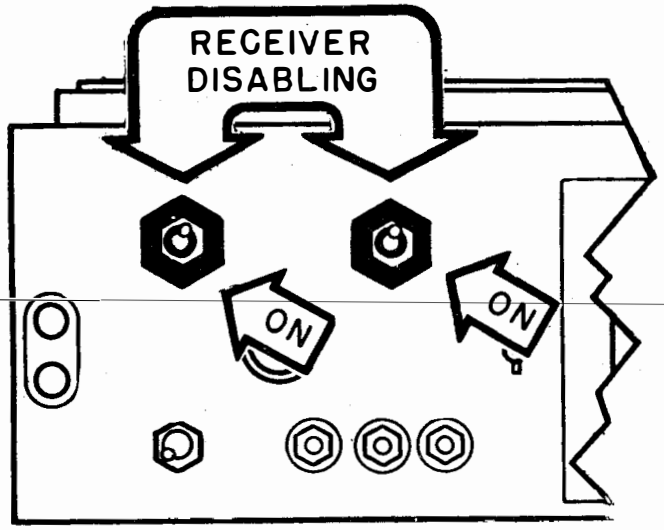

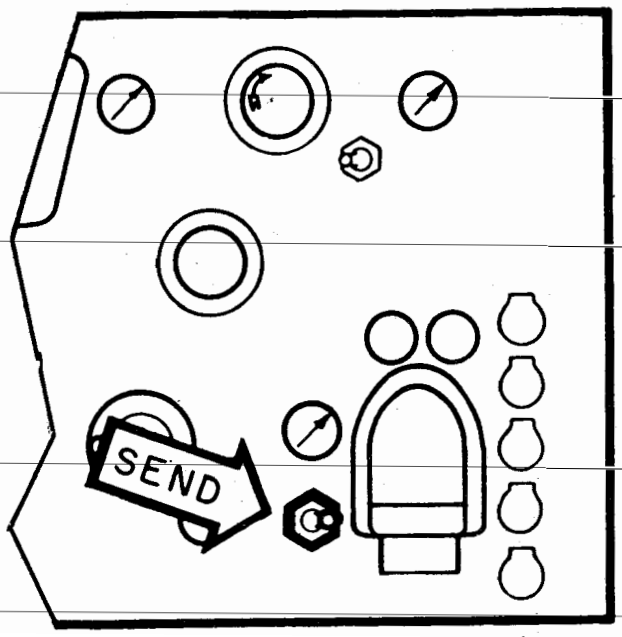

TL 14801

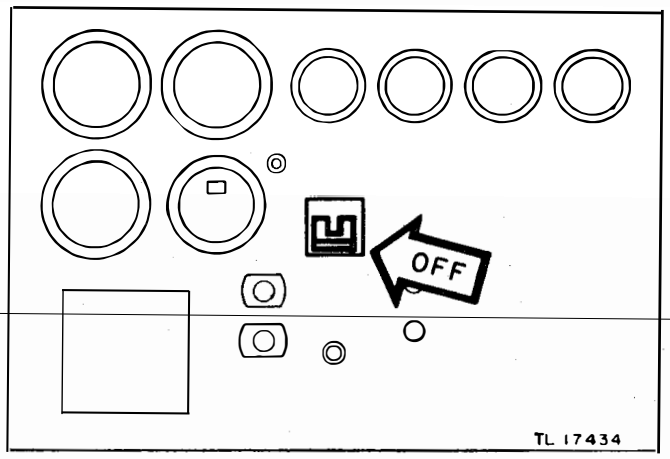

TL 17434

d. POWER UNIT PE–95–( ). (1) *Start and check the unit.* Turn OFF THE large ON-OFF switch marked CIRCUIT BREAKER (located on the control panel of the power unit). Check the operation and condition of the power unit in accordance with procedure described in TM 11–904.

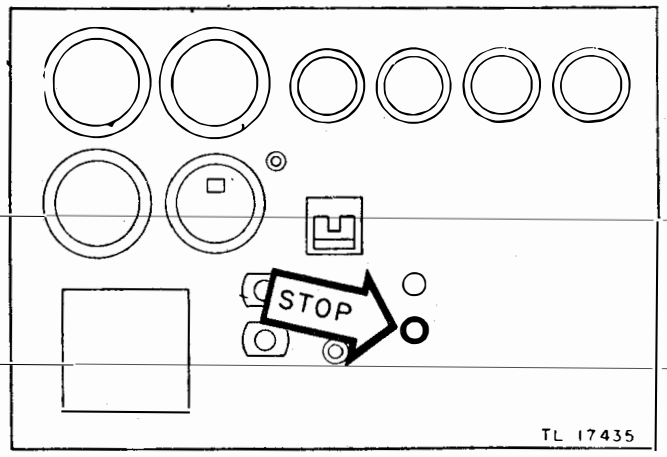

TL 17435

(2) *Stop the unit.* When completely checked, push the STOP button of the START-STOP switch (on the control panel of the power unit) and hold it until the power unit stops.

Note. Some power units are issued which contain a momentary push-to-stop switch which does not have to be held in until the power unit stops. In general, the stop button must be held in on Ford-powered units, while Willys-powered units have the momentary push-to-stop switches.

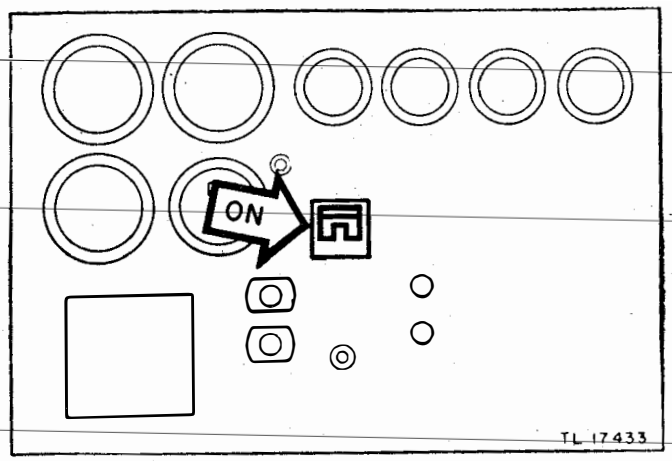

(3) *Set circuit breaker.* Set the ON-OFF (CIRCUIT BREAKER) switch of the power unit at ON.

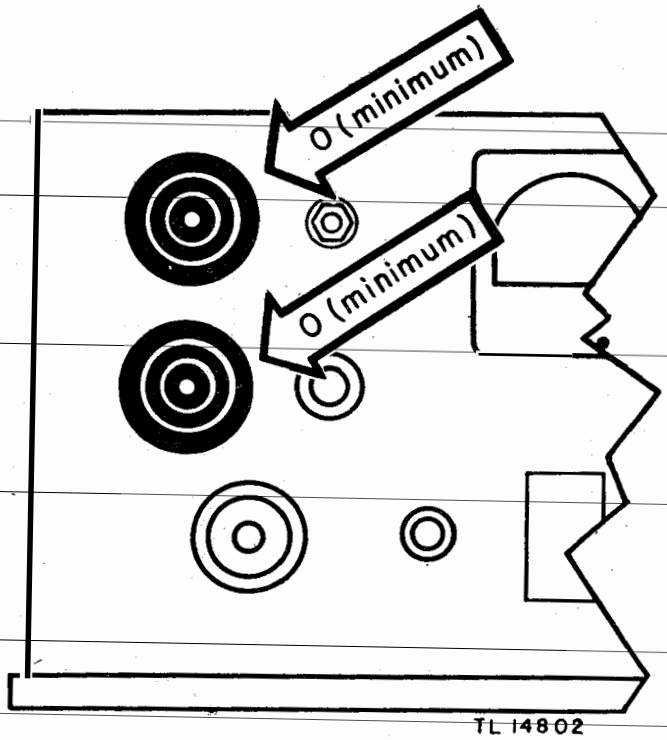

e. POSITION OF SWITCHES AND CONTROLS. (1) *Speech Amplifier BC–614–E.* Rotate the gain control knobs of both CARBON MIC. 1 and DYNAMIC MIC. 2 to their extreme counterclockwise positions (minimum gain).

(2) *Junction Box JB–70–A.* (*a*) Set transmitter main control switch at TRANS. OFF.

(*b*) Set C.W. SIDETONE switch at OFF.

(*c*) Set both receiver disabling switches (marked RECEIVER DISABLING) at ON.

(*d*) Set RECEIVER OUTPUT switch at NORMAL.

(*e*) Set REMOTE CONTROL EE–8 switch at NORMAL.

(*f*) BATTERY SOURCE switch.

1. If Power Unit PE–95–( ) is provided with 12-volt terminals and Cord CO–316 is connected to these terminals, set the BATTERY SOURCE switch on Junction Box JB–70–A at PE–95.

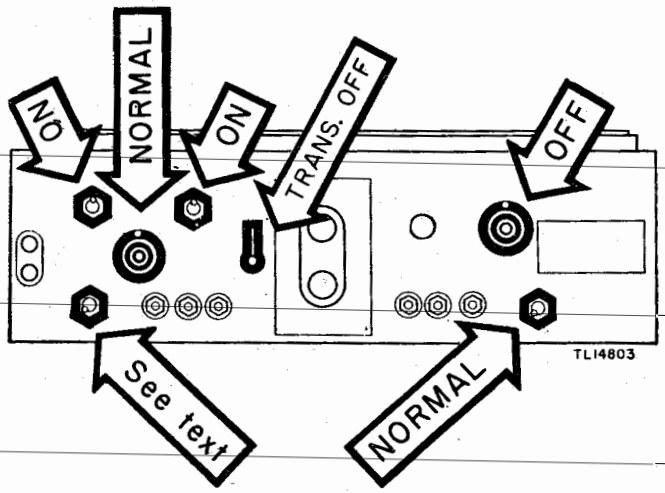

2. If the 12-volt supply in Chest CH–109–A is to be used, set the BATTERY SOURCE switch at AUX. and set the Rectifier RA–63–(*) switch at TRICKLE. If Radio Receiver BC–312–( ) is to be used, set the rectifier switch at HI CHARGE.

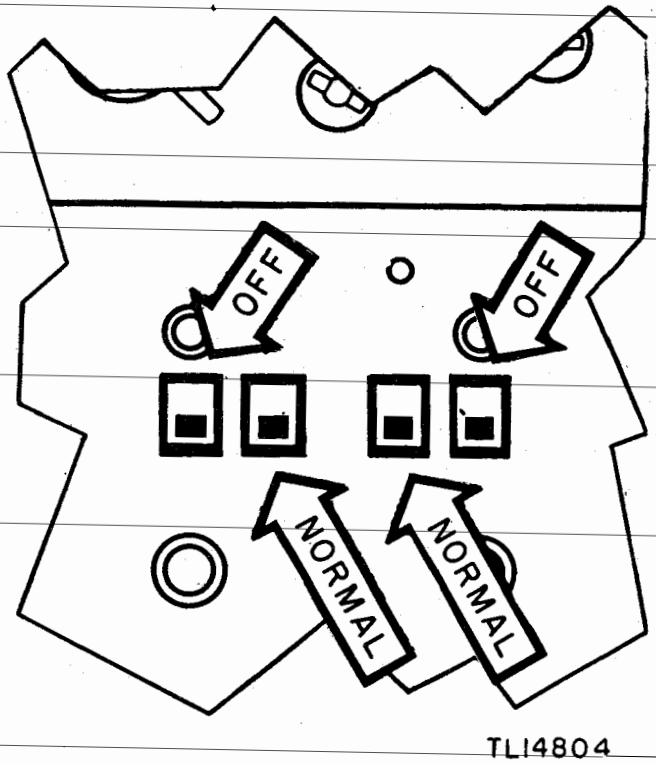

Caution: When Radio Receiver BC–312–( ) is to be turned off for more than 1 hour, turn the rectifier switch to TRICKLE.

(*g*) See that key plugs are in proper jacks.

(3) *Radio Transmitter BC–610–E.* (*a*) Set FILAMENT POWER switch at OFF.

(*b*) Set PLATE POWER switch at OFF.

(*c*) Set EXCITER PLATE POWER switch at NORMAL (down).

(*d*) Set HIGH VOLTAGE PROTECT switch at NORMAL (down).

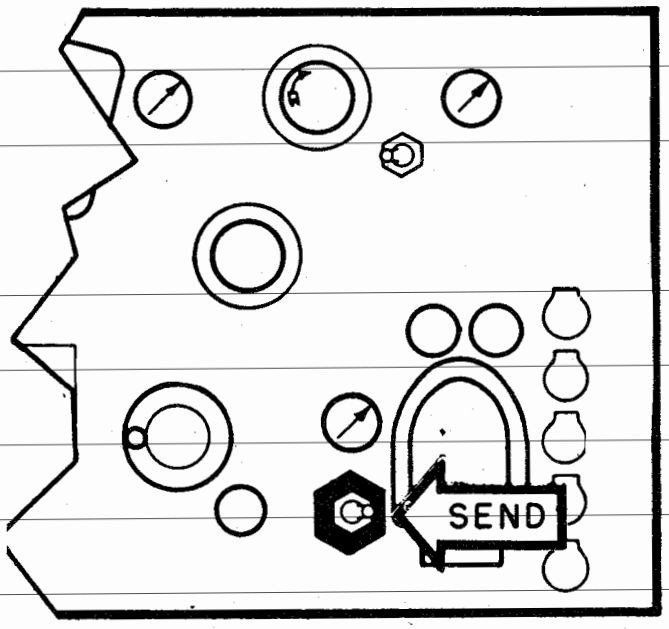

TL14805

(4) *Radio Receivers BC–312–( ) and BC–342–( ).* Set SEND–REC. switches at SEND.

Caution: Leave these switches in SEND position at all times.

f. DRYING OUT THE TRANSMITTER. Start Power Unit PE–95–( ) and turn on FILAMENT POWER switch of Radio Transmitter BC–610–E. In damp locations this should be done at least 15 to 30 minutes before turning on the high voltage. The drying process can be accelerated by turning on the heater in the shelter.

g. RADIO RECEIVERS BC–312–( ) AND BC–342–( ). (1) Check the operation and condition of Radio Receivers BC–312–( ) and BC–342–( ) as outlined in TM 11–850.

(2) Remove two Headsets HS–30–( ) with Cords CD–605 from Chest CH–120–A. On Junction Box JB–70–A, plug one headset into one of the jacks marked HEADSET located to the left of the START-STOP switch, and plug the other headset into one of the jacks to the right of the START-STOP switch. When the RECEIVER OUTPUT switch is set at NORMAL (par. 421), the left-hand pair of headset jacks is connected to Radio Receiver BC–312–( ) and the right-hand pair of headset jacks is connected to Radio Receiver BC–342–( ).

Note. When no commercial power is available, Power Unit PE–95–( ) must be started before Radio Receiver BC–342–( ) can be checked.

47. Tuning Radio Transmitter BC–610–E for C-W Operation [Master-Oscillator Control]

No matter what mode of operation is intended, always tune the transmitter for c–w operation first. The step-by-step procedure outlined below is illustrated with line drawings. The numbers and letters on these illustrations correspond to the numbers and letters used in the text.

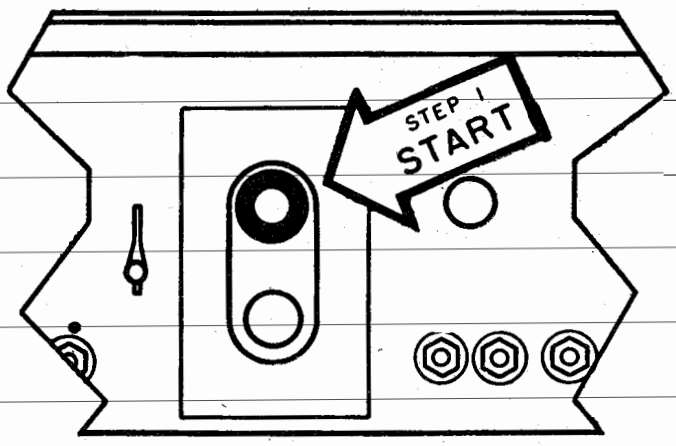

TL14806

STEP 1

Push the START button on Junction Box JB–70–A until Power Unit PE–95–( ) starts and picks up speed.

STEP 2

Turn on the electric lights in Chest CH–120–A, Chest CH–121–A, and in the shelter over the transmitter.

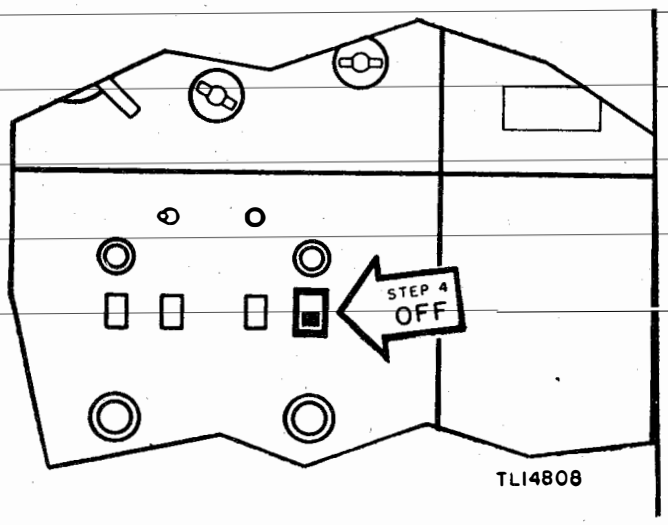

TL14808

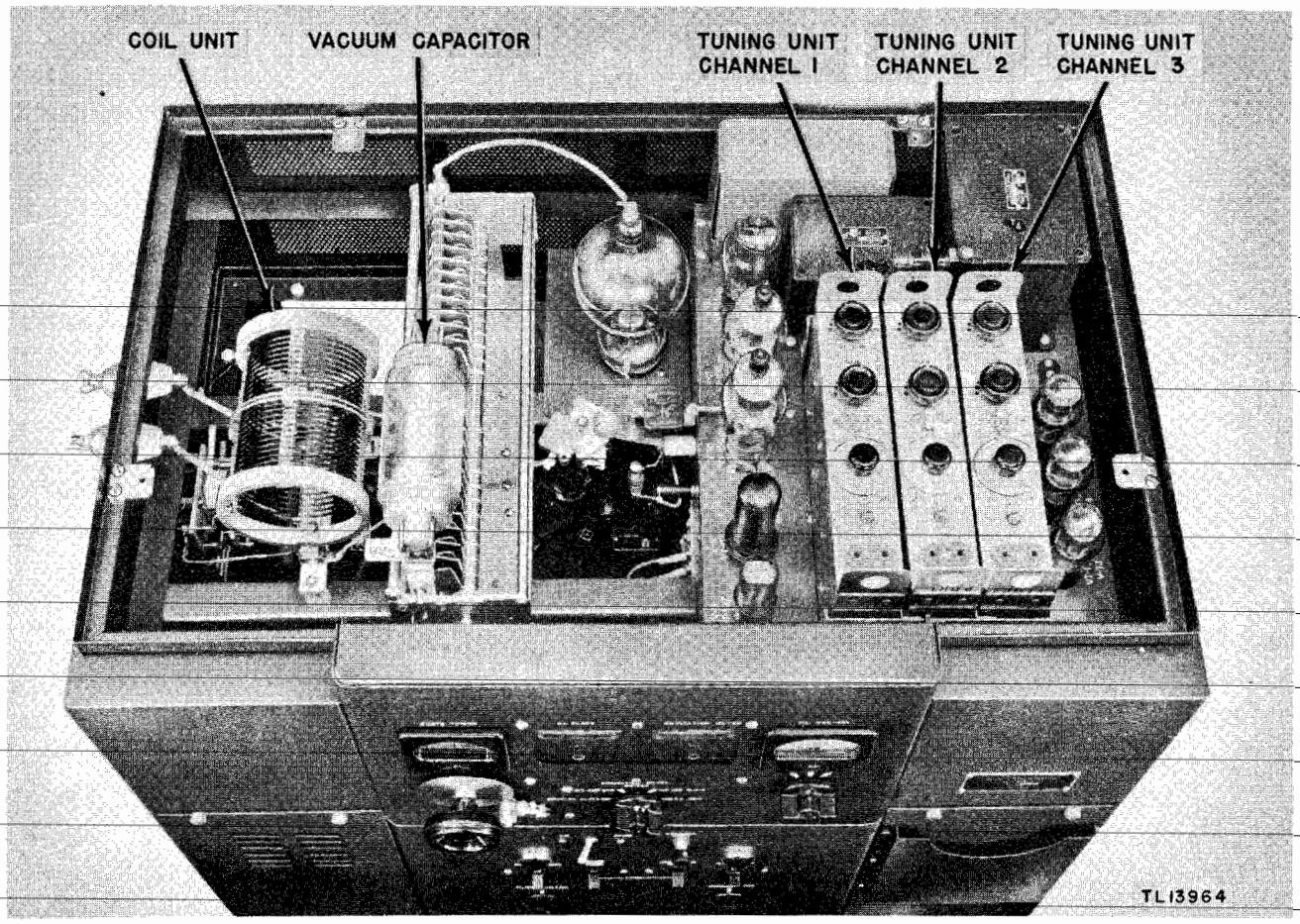

Figure 30. Radio Transmitter BC-610-E, top covers removed.

STEP 3
Turn on the electric heater or the ventilating blower, if either is desired.

STEP 4
See that the PLATE POWER switch of the transmitter is at OFF and is left there. (See Caution, par. 39*m*.)

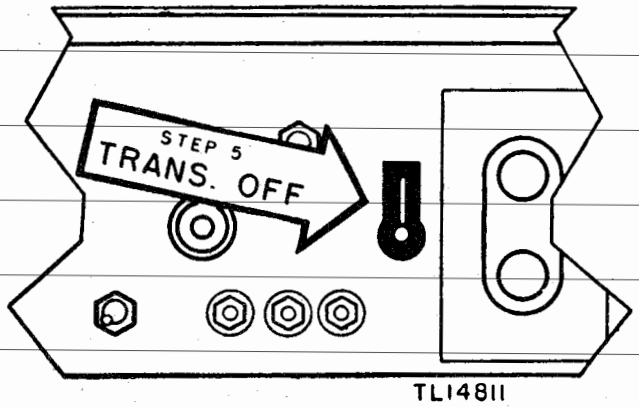

STEP 5
Make sure that the transmitter control switch on Junction Box JB-70-A is at TRANS. OFF.

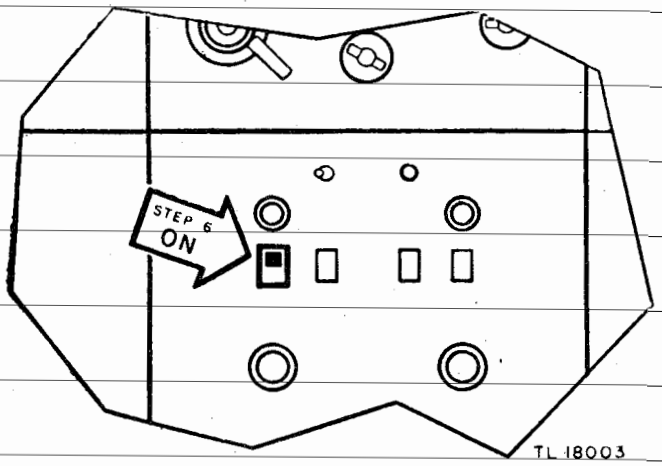

STEP 6
Set the FILAMENT POWER switch of the transmitter at ON. The green pilot lamp and the PLATE TUNING dial should now light. The FIL. VOLTAGE meter should register. (Allow 1 minute for the filaments to come up to the proper operating temperature.) Adjust the FILAMENT VOLTAGE control of the

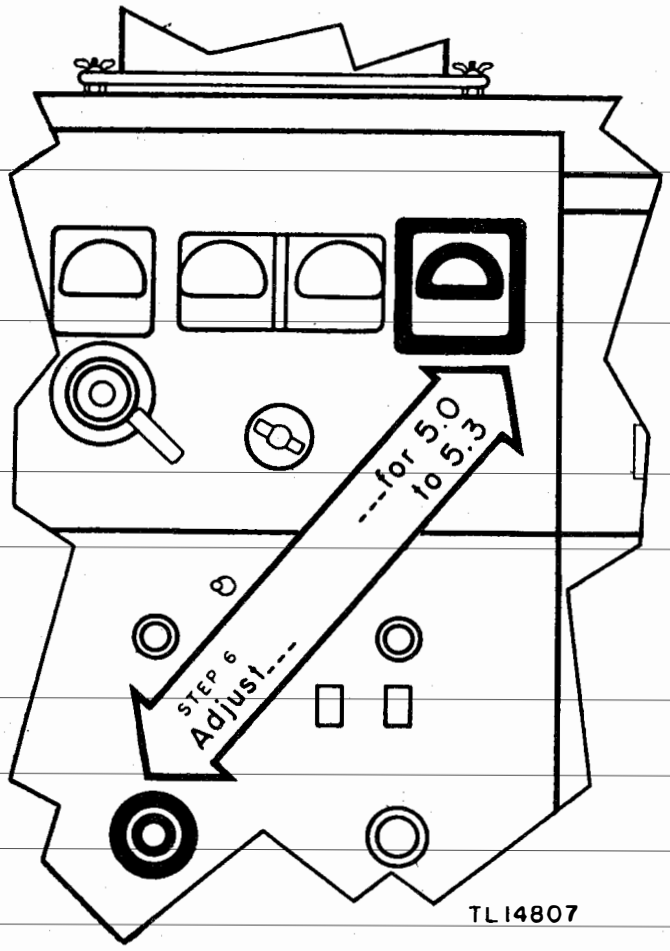

transmitter until the FIL. VOLTAGE meter indicates 5.0 to 5.3 volts.

STEP 7

From Chest CH–88–A, select one tuning unit covering the desired frequency range. Tables III and IV list the tuning units and the frequency ranges they cover. Figures 156 through 160 show the tuning charts furnished with the radio sets.

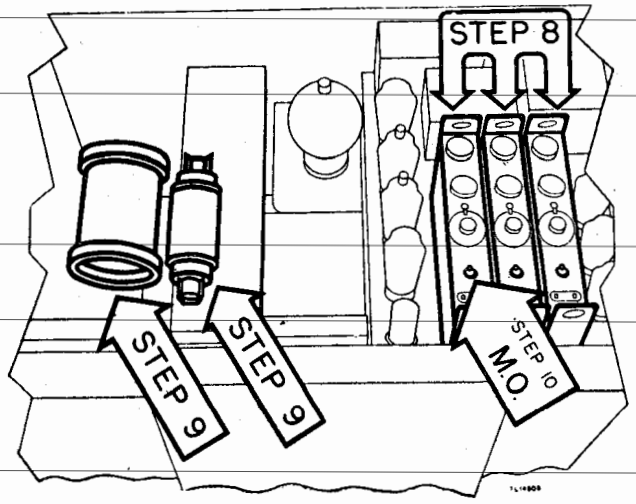

STEP 8

Open the right-hand door in the cover of the transmitter and firmly insert the tuning unit in one of the three available receptacles, marked 1, 2, and 3. (Locate the tuning unit so that the switch marked M.O.–XTAL faces the front panel of the transmitter.)

STEP 9

From Chest CH–88–A, select one coil unit covering the desired frequency. Remove Capacitor CA–423 from Chest CH–88–A, if operation in the 2.0–to 2.5–mc (megacycle) range is desired. Open the left-hand door in the cover of the transmitter and insert the coil unit (and Capacitor CA–423 if required).

STEP 10

Set the M.O.–XTAL switch of the tuning unit at M.O.

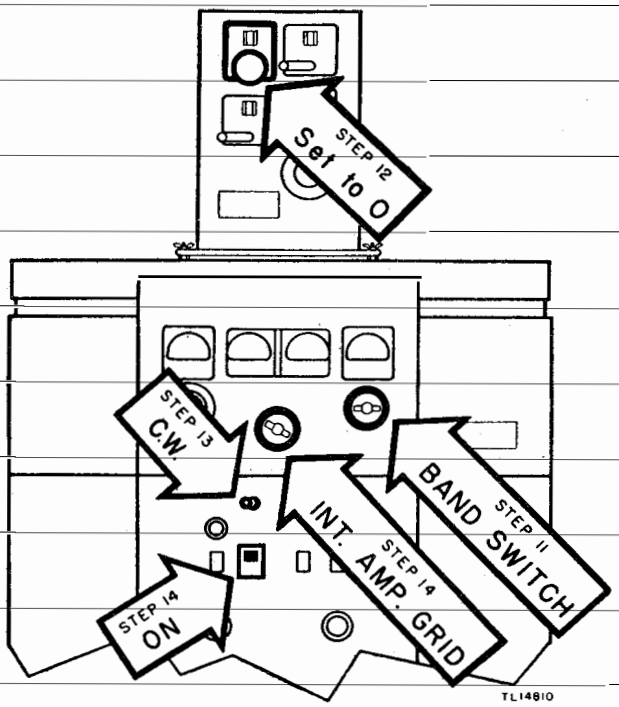

STEP 11

Set the BAND SWITCH on the front panel of the transmitter at the number which corresponds to the socket in which the tuning unit was placed.

STEP 12

Set the COUPLING control of Antenna Tuning Unit BC–939–A to O.

STEP 13

Set the C.W.–PHONE switch of the transmitter at C.W.

STEP 14
Set the EXCITATION METER SWITCH on the front panel of the transmitter at INT. AMP. GRID. Set the EXCITER PLATE POWER switch of the transmitter at ON.

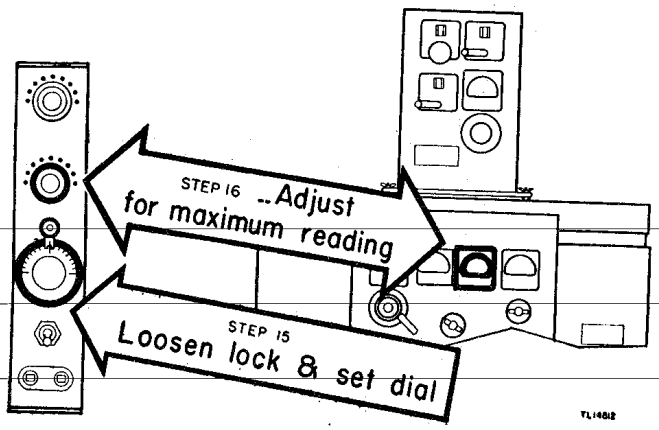

STEP 15
Loosen the thumbscrew lock on the M.O. dial of the tuning unit. Set the M.O. dial to the desired frequency as indicated by the tuning chart of Radio Transmitter BC-610-E which pertains to the tuning unit in use. For greater accuracy use Frequency Meter Set SCR-211-( ). (See TM 11-300.) Tighten the dial lock.
STEP 16
Adjust the center knob of the tuning unit (marked DOUB) for maximum reading as indicated on the EXCITATION METER.

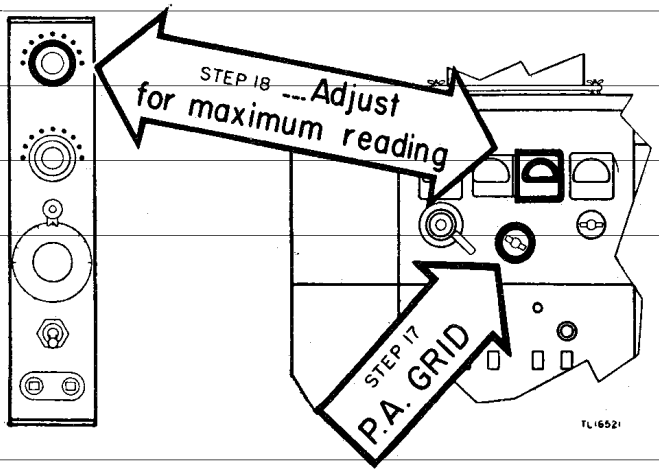

STEP 17
Set the EXCITATION METER SWITCH on the front panel of the transmitter at P.A. GRID.
STEP 18
Adjust the INT. AMP. knob of the tuning unit for maximum reading as indicated on the EXCITATION METER.

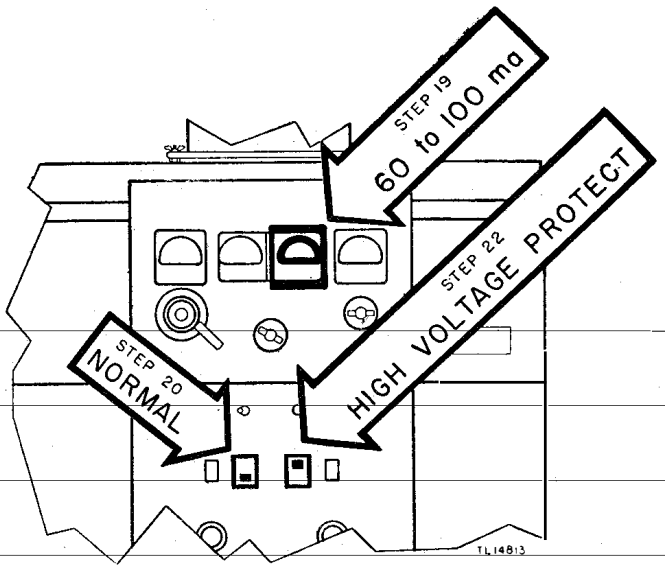

STEP 19
Repeat steps 16 and 18 until the maximum possible deflection is obtained on the EXCITATION METER. The EXCITATION METER should indicate between 60 and 100 ma (milliamperes).
STEP 20
Set the EXCITER PLATE POWER switch at NORMAL (off).
STEP 21
Make certain that both doors in the top cover of the transmitter are firmly closed upon the interlock switches; otherwise plate power cannot be applied.
STEP 22
Set the HIGH VOLTAGE PROTECT switch at HIGH VOLTAGE PROTECT. Always do this before tuning the final amplifier or the antenna tuning unit.

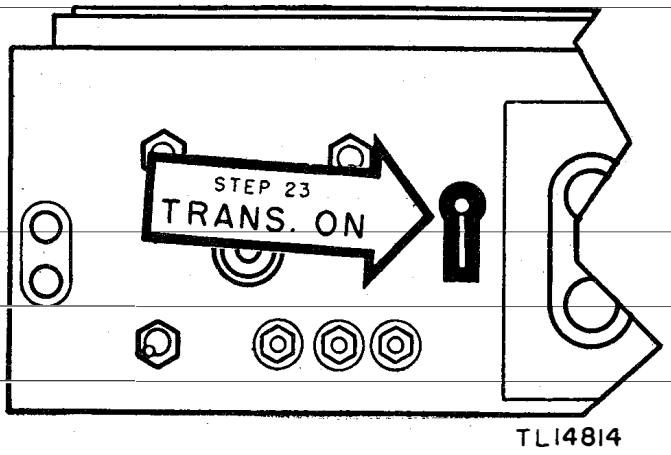

STEP 23

Set the transmitter control switch on Junction Box JB–70–A at TRANS. ON. The red pilot lamp on the transmitter should now light.

STEP 24

Press and hold down Key J–37 while making subsequent tuning adjustments. The P.A. PLATE meter should indicate a flow of current in the circuit. The quantity of current will depend upon the setting of the PLATE TUNING dial.

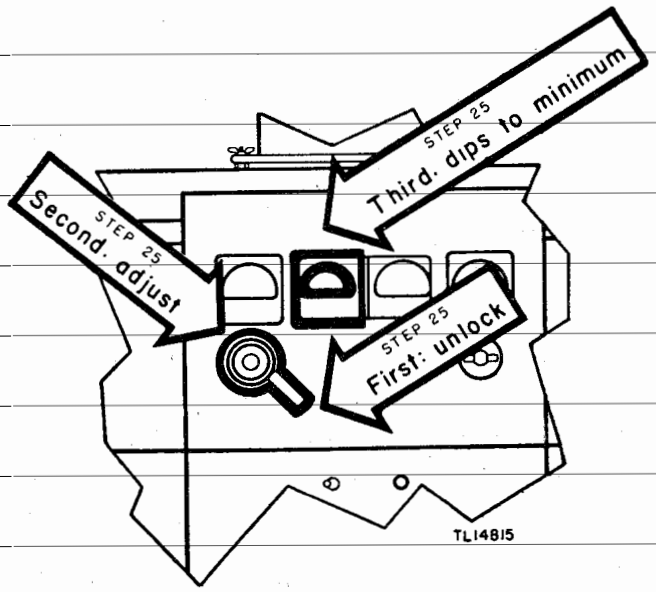

STEP 25

Unlock the PLATE TUNING dial by pushing down on the small knurled knob and adjust the wheel until the P.A. PLATE meter dips to a minimum reading. ONCE THIS ADJUSTMENT IS MADE, DO NOT CHANGE IT UNTIL THE TRANSMITTER IS TO BE TUNED ON A NEW FREQUENCY. Lock the PLATE TUNING dial by pushing the lock lever to the right.

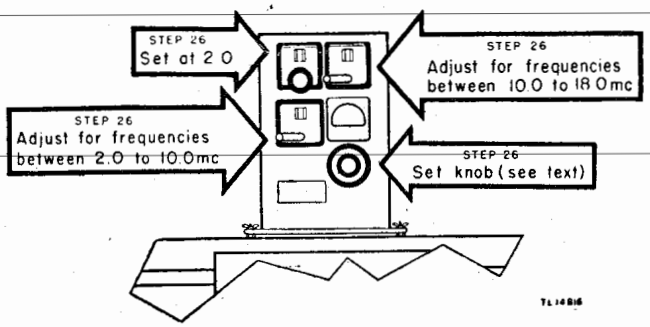

STEP 26

On Antenna Tuning Unit BC–939–A, set the range switch knob at 2–10MC if operating below 10 mc, or at 10–18MC if operating above

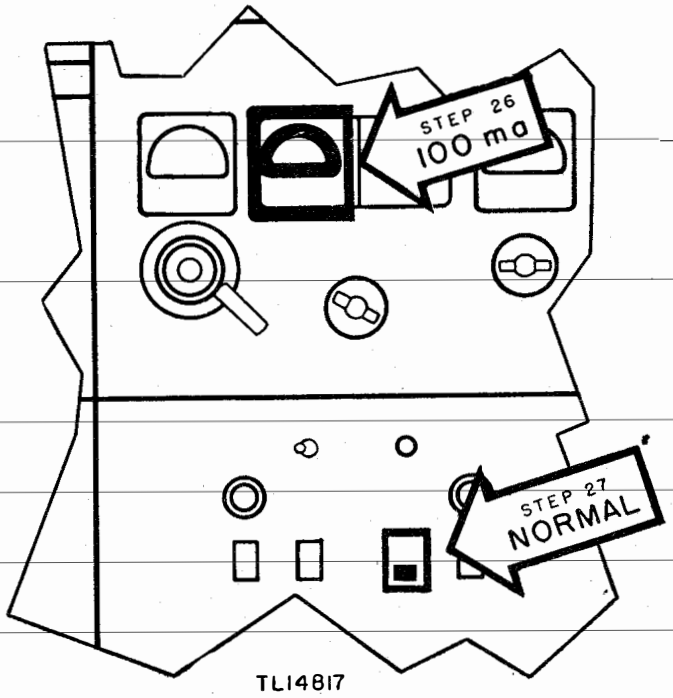

10 mc. If a long wire antenna is used, set the knob at LONG WIRE. Set COUPLING INCREASE control at about 2.0. From the tuning chart, determine the approximate setting of antenna tuning inductor for the selected frequency. Turn antenna tuning inductor crank to approach this setting and watch for an indication of rising plate current on the P.A. PLATE meter on the transmitter.

Note. If the operating frequency is in the range of 2 to 10 mc, use the crank marked FREQUENCY 10MC–INCREASE–2MC. If the operating frequency is in the range of 10 to 18 mc, use the crank marked FREQUENCY 18MC–INCREASE–10MC. When the antenna range switch is set at LONG WIRE, use the crank marked FREQUENCY 10MC–INCREASE–2MC. It will be found that fewer turns of the loading coil will be necessary when a long wire antenna is used instead of a whip antenna.

Adjust the proper crank for maximum indication of the P.A. PLATE meter. Either increase or decrease the degree of coupling with the COUPLING INCREASE knob of the antenna tuning unit to keep the P.A. PLATE meter reading at 100 ma. The ANTENNA CURRENT meter will now give some indication of antenna current.

STEP 27

Throw the HIGH VOLTAGE PROTECT switch of the transmitter to NORMAL. Press Key J–37. The P.A. PLATE meter of the transmitter and the ANTENNA CURRENT meter of the antenna tuning unit will now indicate substantially higher readings.

STEP 28

Alternately adjust the COUPLING INCREASE control and the tuning inductor crank until the maximum antenna current occurs when the P.A. PLATE meter reads 290 ma.

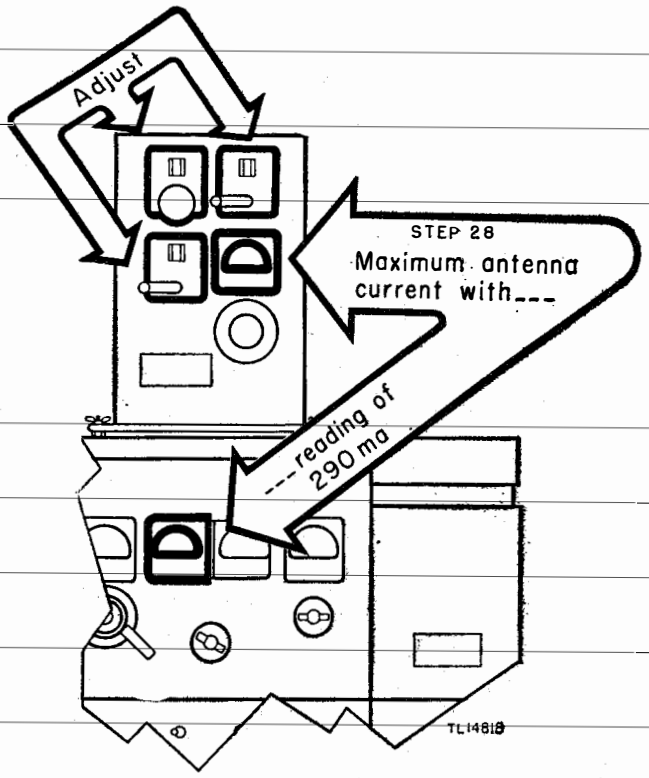

Caution: NEVER EXCEED A P.A. PLATE METER READING OF 300 MA on c–w operation. It is permissible to reduce coupling until plate current is as low as 200 ma, if satisfactory c–w communication is still maintained. Do not readjust the PLATE TUNING dial after it is once adjusted for the frequency on which operation is to take place.

STEP 29

Release Key J–37. With the opening of the key, the EXCITATION, P.A. PLATE, and ANTENNA CURRENT meters should return to zero.

STEP 30

Press Key J–37 and check the FIL. VOLTAGE meter. If necessary reset the FILAMENT VOLTAGE knob until this meter reads 5.0 to 5.3 volts; then release the key. This completes the tuning procedure, and the transmitter is ready for c–w operation. Keying of the transmitter may be checked by depressing the key and noting the meter indications. Data on meter readings will be found in the equipment performance check list. (See par. 66.)

STEP 31

If c–w transmission is not desired at the moment, throw the transmitter control switch on the junction box to TRANS. OFF.

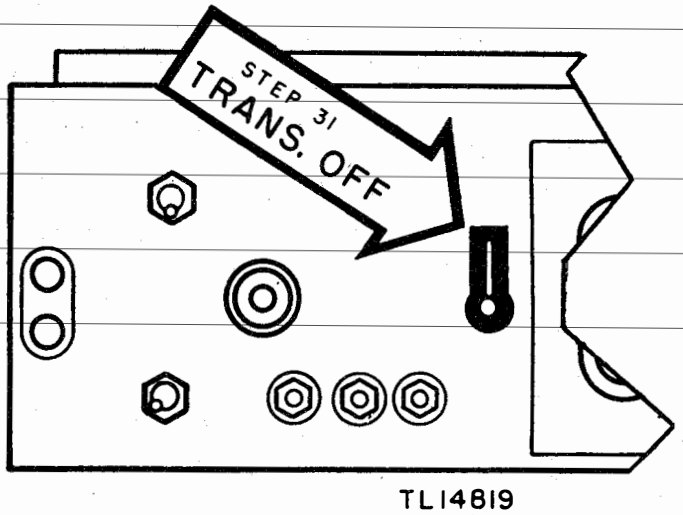

Note. To turn off the transmitter completely, set the FILAMENT POWER switch on Radio Transmitter BC–610–E at OFF.

Table III. Tuning components

Component	Frequency Range (mc)
Tuning Unit	
TU–47	2.0 to 2.5
TU–48	2.5 to 3.2
TU–49	3.2 to 4.0
TU–50	4.0 to 5.0
TU–51	5.0 to 6.35
TU–52	6.35 to 8.0
TU–53	8.0 to 12.0
TU–54	12.0 to 18.0
Coil Unit	
C–387–B (with Capacitor CA–423)	2.0 to 2.5
C–387–B	2.5 to 3.5
C–388–A	3.5 to 4.5
C–389–A	4.5 to 5.7
C–390–A	5.7 to 8.0
C–447	8.0 to 11.0
C–448	11.0 to 14.0
C–449	14.0 to 18.0

Table IV. Tuning ranges for long wire antennas when used with Antenna Tuning Unit BC–939–A

Antenna lengths (ft.)	Useful frequency range (mc)
25	2 to 10; 15 to 18
35	2 to 6; 11 to 18
45	2 to 4; 10 to 18
65	2 to 3; 9 to 18

48. Tuning Radio Transmitter BC–610–E for C-W Operation [Crystal Control]

STEP 1

Perform all operations in steps 1 through 9 and 11 through 13 in paragraph 47, then proceed as follows:

STEP 2

Set the tuning unit M.O.–XTAL switch at XTAL. Insert into XTAL jack Crystal Holder

FT–171–B with a crystal of proper frequency as listed in table V.

Note. At frequencies between 2 and 4 mc, the transmitter output frequency is the same as the crystal frequency and a circuit controlled by the DOUB. knob functions as a buffer stage. At frequencies between 4 and 12 mc, this stage acts as a doubler; hence the output frequency is twice that of the crystal. For example, a crystal with a frequency of 2,200 kc (kilocycles) may be used with Tuning Unit TU–47 to produce the same frequency in the transmitter output or it may be used with Tuning Unit TU–50 to operate the transmitter on 4,400 kc. At frequencies between 12 and 18 mc this stage quadruples the crystal frequency. For example, a 4,000-kc crystal will produce a transmitter output frequency of 16,000 kc.

STEP 3

Set the EXCITATION METER SWITCH on the transmitter at INT. AMP. GRID. Set the EXCITER PLATE POWER switch on the transmitter at ON.

STEP 4

Perform all operations listed in steps 16 through 30, paragraph 47.

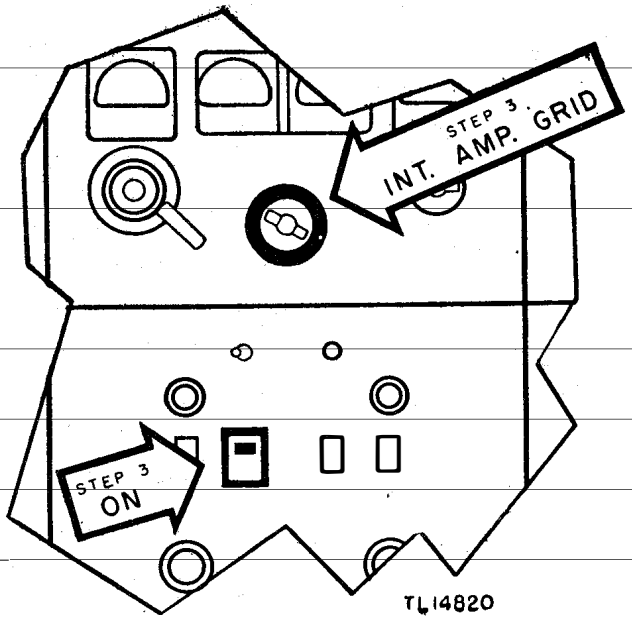

Table V. Crystals and operating frequencies

Note. Radio Sets SCR–399–A and SCR–499–A include two sets of Crystal Holders FT–171–B whose crystals have the following operating frequencies. For convenience, a third column is included to show the additional operating frequencies which may be obtained by use of different tuning units. Two groups of crystals are shown, only one of which is supplied with each set.

GROUP 1

Crystal frequency (kc)	Operating frequency (kc)	Tuning Unit	Additional possible operating frequencies (kc)	Tuning Unit
2,030	2,030	TU–47	4,060	TU–50
2,220	2,220	TU–47	4,440	TU–50
2,258	2,258	TU–47	4,516	TU–50
2,300	2,300	TU–47	4,600	TU–50
2,360	2,360	TU–47	4,720	TU–50
2,390	2,390	TU–47	4,780	TU–50
3,510	3,510	TU–49	7,020	TU–52
3,520	3,520	TU–49	7,040	TU–52
3,550	3,550	TU–49	7,100	TU–52
3,570	3,570	TU–49	7,140	TU–52
3,580	3,580	TU–49	7,160	TU–52
3,945	3,945	TU–49	7,890	TU–52
3,955	3,955	TU–49	7,910	TU–52
2,045	4,090	TU–50	2,045	TU–47
2,065	4,130	TU–50	2,065	TU–47
2,105	4,210	TU–50	2,105	TU–47
2,105	4,210	TU–50	2,105	TU–47
2,125	4,250	TU–50	2,125	TU–47
2,145	4,290	TU–50	2,145	TU–47
2,155	4,310	TU–50	2,155	TU–47
2,260	4,520	TU–50	2,260	TU–47
2,282.5	4,565	TU–50	2,282.5	TU–47
2,290	4,580	TU–50	2,290	TU–47
2,305	4,610	TU–50	2,305	TU–47
2,320	4,640	TU–50	2,320	TU–47
2,415	4,830	TU–50	2,415	TU–47
2,435	4,870	TU–50	2,435	TU–47
2,442.5	4,885	TU–50	2,442.5	TU–47
2,532.5	5,065	TU–51	2,532.5	TU–48
2,545	5,090	TU–51	2,545	TU–48
2,557.5	5,115	TU–51	2,557.5	TU–48
3,202.5	6,405	TU–52	3,202.5	TU–49
3,215	6,430	TU–52	3,215	TU–49
3,237.5	6,475	TU–52	3,237.5	TU–49
3,250	6,500	TU–52	3,250	TU–49
3,322.5	6,645	TU–52	3,322.5	TU–49

GROUP 2

Crystal frequency (kc)	Operating frequency (kc)	Tuning Unit	Additional possible operating frequencies (kc)	Tuning Unit
2,030	2,030	TU–47	4,060	TU–50
2,052.5	2,052.5	TU–47	4,105	TU–50
2,085	2,085	TU–47	4,170	TU–50
2,117.5	2,117.5	TU–47	4,235	TU–50
2,160	2,160	TU–47	4,320	TU–50
2,200	2,200	TU–47	4,400	TU–50
2,217.5	2,217.5	TU–47	4,435	TU–50
2,390	2,390	TU–47	4,780	TU–50
2,415	2,415	TU–47	4,830	TU–50
2,436	2,436	TU–47	4,872	TU–50
2,532.5	2,532.5	TU–48	5,065	TU–51
2,647.5	2,647.5	TU–48	5,295	TU–51
2,772	2,772	TU–48	5,544	TU–51
2,980	2,980	TU–48	5,960	TU–51
3,000	3,000	TU–48	6,000	TU–51
3,035	3,035	TU–48	6,070	TU–51
3,100	3,100	TU–48	6,200	TU–51
3,120	3,120	TU–48	6,240	TU–51
3,150	3,150	TU–48	6,300	TU–51
3,155	3,155	TU–48	6,310	TU–51
3,232.5	3,232.5	TU–49	6,465	TU–52
3,265	3,265	TU–49	6,530	TU–52
3,322.5	3,322.5	TU–49	6,645	TU–52
3,417.5	3,417.5	TU–49	6,835	TU–52
3,475	3,475	TU–49	6,950	TU–52
3,588	3,588	TU–49	7,170	TU–52
3,665	3,665	TU–49	7,330	TU–52
3,725	3,725	TU–49	7,450	TU–52
3,785	3,785	TU–49	7,570	TU–52
3,792.5	3,792.5	TU–49	7,585	TU–52
3,850	3,850	TU–49	7,700	TU–52
3,865	3,865	TU–49	7,730	TU–52
3,905	3,905	TU–49	7,810	TU–52
3,935	3,935	TU–49	7,870	TU–52
3,995	3,995	TU–49	7,990	TU–52
3,997.5	3,997.5	TU–49	7,995	TU–52

Note. Although no crystals are included for frequencies above 8 mc, the following examples show typical crystal and operating frequencies in this range.

Crystal frequency (kc)	Operating frequency (kc)	Tuning Unit
4,500	9,000	TU-53
5,500	11,000	TU-53
3,500	14,000	TU-54
4,500	18,000	TU-54

49. Tuning Radio Transmitter BC-610-E for Voice Operation

STEP 1

Perform all operations in paragraph 47 or 48 (depending upon whether the operation is to be m-o controlled or crystal controlled), then proceed as follows:

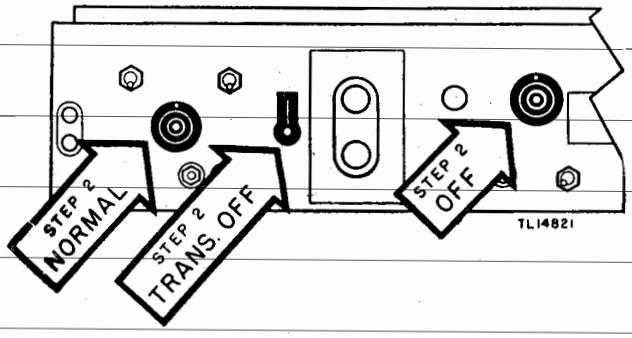

STEP 2

On Junction Box JB-70-A set the transmitter control switch at TRANS. OFF. Set REMOTE CONTROL EE-8 switch at NORMAL. Set C.W. SIDETONE at OFF.

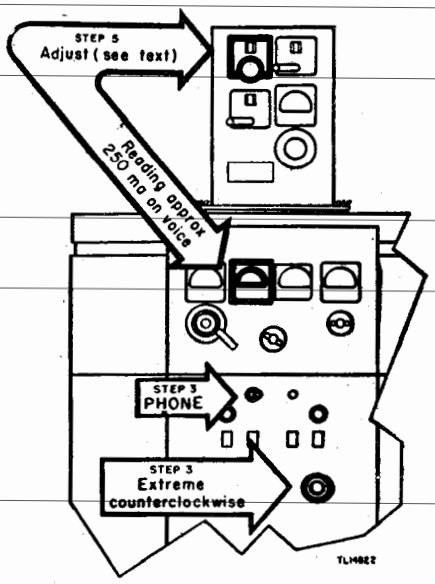

STEP 3

Set the MODULATOR BIAS control on transmitter to the extreme counterclockwise position. (This increases the bias so that the MODULATOR PLATE meter, located on Speech Amplifier BC-614-E, will not indicate until further adjustments have been made.) Set the C.W.-PHONE switch at PHONE.

Caution: Never throw this switch while the final amplifier is turned on.

STEP 4

Remove Microphone T-50 from its mount in Chest CH-120-A and connect it to the receptacle marked DYNAMIC MIC. 2 located on the speech-amplifier panel.

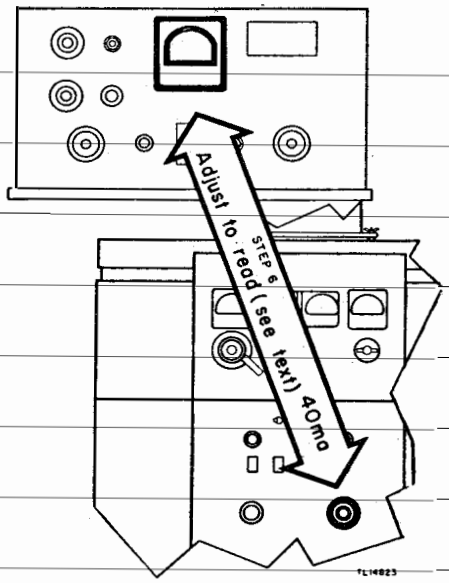

STEP 5

Press the switch on the microphone and note that this puts the transmitter carrier on the air. The P.A. PLATE meter should read approximately 250 ma, which is the normal plate current for voice operation. If the transmitter

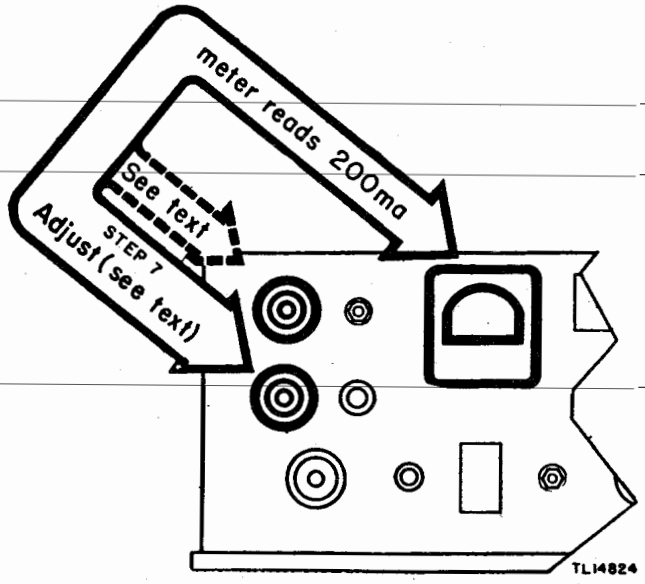

has been tuned to 290 ma on c-w operation, the plate current will be 250 ma when switched to voice because the C.W.-PHONE switch automatically reduces the final amplifier plate voltage. If the P.A. PLATE meter reads more than 260 ma, the COUPLING INCREASE control on the antenna tuning unit should be adjusted until the plate current is reduced to the proper value.

STEP 6

Hold the microphone in the left hand, press the microphone switch, and with the right hand adjust the MODULATOR BIAS control on the transmitter until the MODULATOR PLATE meter on Speech Amplifier BC–614–E indicates 40 ma. Release the microphone switch.

STEP 7

Hold the microphone in the normal speaking position (position varies with voice characteristics, from 2 to 6 inches from mouth), press the microphone switch, and speak into the microphone. While pressing the switch and talking into the microphone, adjust the gain control (marked DYNAMIC MIC. 2) until the MODULATOR PLATE meter indicates approximately 200 ma on voice peaks. If the pointer swings higher than 200 ma on extreme voice peaks, reduce the gain control to prevent exceeding 200 ma. (This figure represents 100 percent modulation when the transmitter is fully loaded.) The same procedure applies to the use of carbon Microphone T–17. Only one gain control should be open (turned away from the O position) at a time, however.

STEP 8

Release the microphone switch, taking the transmitter off the air. Voice transmission can now be accomplished by pressing the microphone switch and speaking into the microphone.

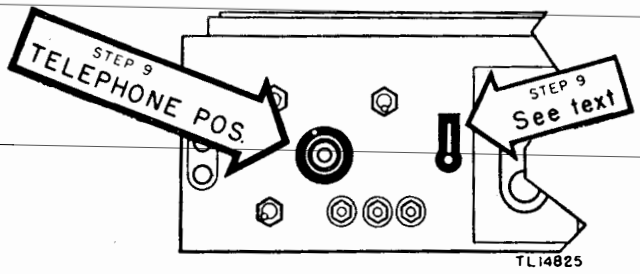

STEP 9

When REMOTE CONTROL EE–8 switch is in either TELEPHONE position, voice transmission can be obtained without pressing the microphone switch. When using this method, set the transmitter control switch at TRANS. ON during transmission periods and to TRANS. OFF to terminate transmission. This procedure is not recommended for general practice.

STEP 10

To turn transmitter off completely, set the transmitter control switch on Junction Box JB–70–A at TRANS. OFF and set FILAMENT POWER switch on the transmitter at OFF.

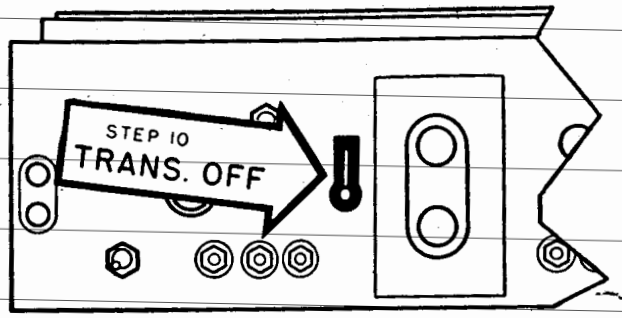

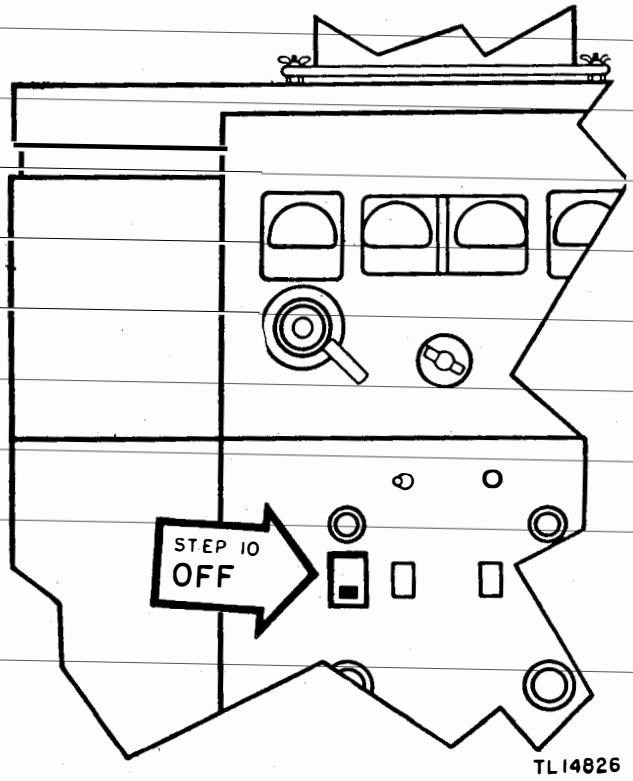

Section III. NORMAL OPERATION

Caution: Before attempting operation of the equipment, read paragraphs 38 through 46. When thoroughly familiar with their contents, proceed with the operation of the set.

50. C-W Operation

To operate the transmitter on continuous wave, perform the following steps:

STEP 1

Push START button on Junction Box JB–70–A until Power Unit PE–95 starts and picks up speed.

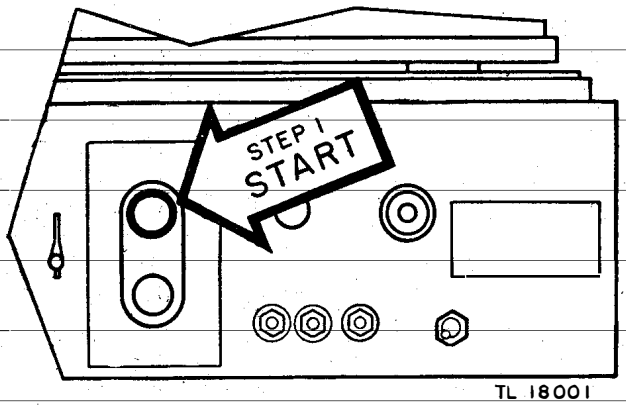

STEP 2

Turn on the electric lights in Chest CH–120–A, Chest CH–121–A, and in the shelter over the transmitter.

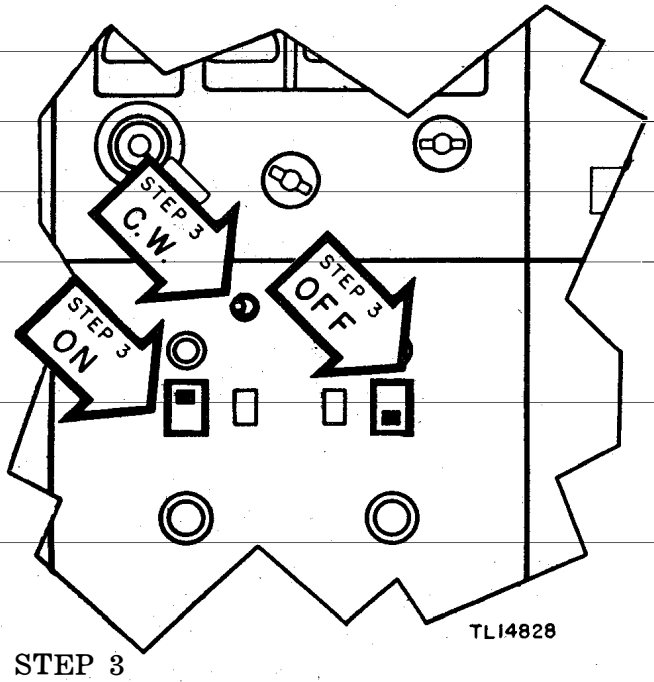

STEP 3

See that the PLATE POWER switch of the transmitter is OFF. Set FILAMENT POWER switch of the transmitter at ON and wait 1 minute for the filaments to reach operating temperature. See the transmitter C.W.-PHONE switch at C.W.

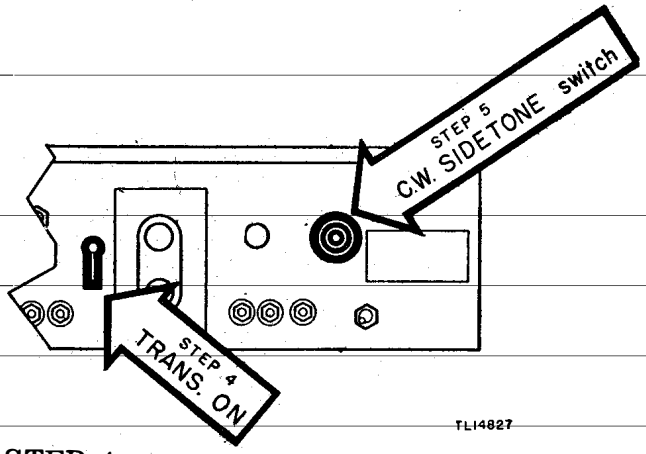

STEP 4

Set the transmitter control switch on Junction Box JB–70–A at TRANS. ON.

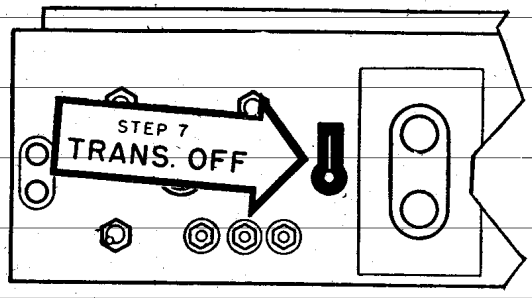

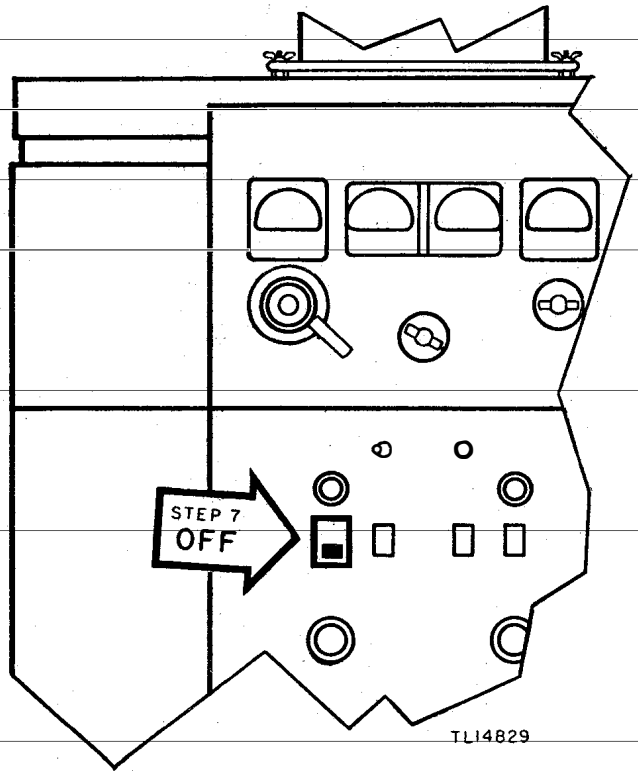

STEP 5

Set the C.W. SIDETONE switch in the position corresponding to the receiver being used.

STEP 6

Use Key J–37 to send any desired messages. In addition to Keys J–37 located in the operating chests, Key J–45 may be used to key the transmitter at the auxiliary KEY jack located on the front of the speech-amplifier panel. Keying of the transmitter at the auxiliary key jack will be necessary if the source of 12-volt d-c power fails, since the auxiliary jack is the only direct connection to the cathode circuit of the transmitter oscillator.

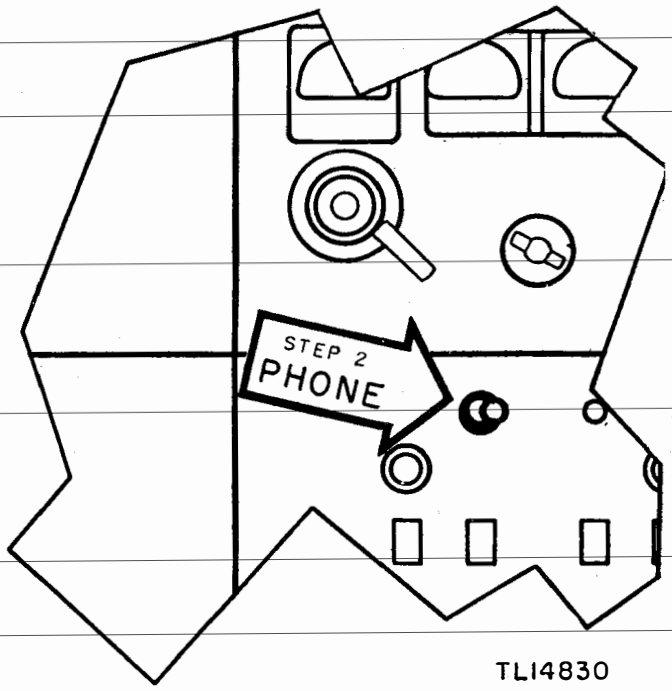

Caution: Relay RY_{200} does not function with this method of keying; therefore, automatic receiver disabling cannot occur. See paragraph 43 before using this jack.

STEP 7

To turn the transmitter off completely, set the transmitter control switch on Junction Box JB–70–A at TRANS. OFF, and set the FILAMENT POWER switch on the transmitter at OFF.

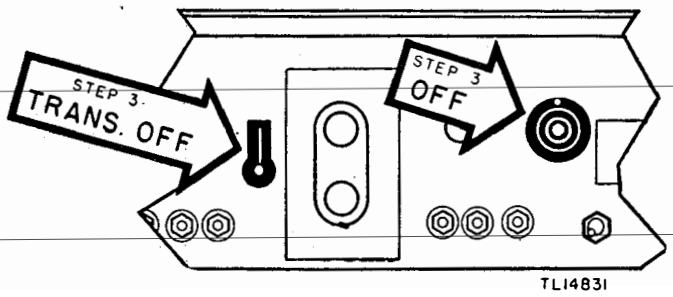

51. Voice Operation

To operate the transmitter on voice, perform the following steps:

STEP 1

Perform all operations in steps 1 through 3, paragraph 50.

STEP 2

Set the transmitter control switch on Junction Box JB–70–A at TRANS. OFF, and the C.W. SIDETONE switch at OFF.

STEP 3

Set the C.W.-PHONE switch of the transmitter at PHONE.

STEP 4

Press the microphone switch on Microphone T–50, and speak into the microphone to modu-

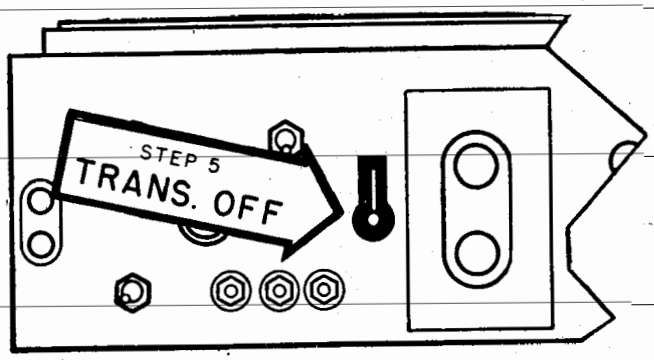

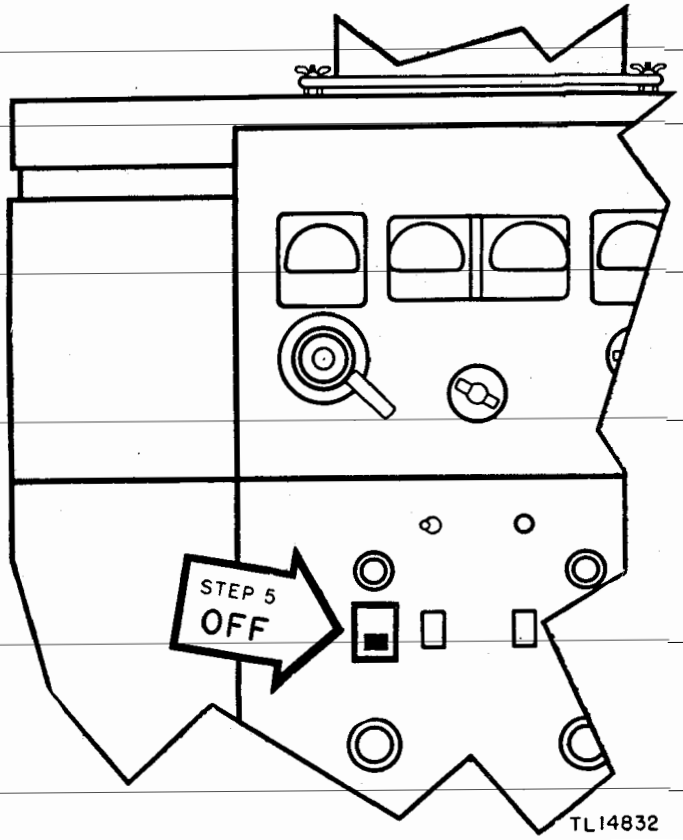

late the transmitter. There are three additional ways of modulating the transmitter, using:

a. Microphone T–30–( ) (throat), if a gas mask must be worn. Insert the plug on the end of the microphone into the jack on Cord CD–318, and plug the other end of Cord CD–318 into the CARBON MIC. 1 jack on the speech-amplifier panel. The adjacent gain knob will control the input level. The microphone switch will operate the transmitter.

b. Microphone T–17, plugged into the CARBON MIC. 1 jack on the speech-amplifier panel. The adjacent gain control will control the input level, and the switch on the microphone will control the transmitter.

c. Handset TS–9–( ) of Telephone EE–8–( ), connected to Junction Box JB–70–A. This handset is stored in the right-hand compartment in Chest CH–120–A. When the transmitter control switch on the junction box is set at TRANS. ON, with REMOTE CONTROL EE–8 switch in either TELEPHONE position, and the microphone switch on the telephone handset is pressed, it is possible to modulate the transmitter. The gain control marked DYNAMIC MIC. 2 provides adjustment of the input level from the handset. In this case, the microphone switch does not control the transmitter, but connects battery current to the microphone. Throwing the transmitter control switch down to REC. TO EE–8 connects the output of one receiver to the earpiece of the handset. The receiver to be used is selected by throwing the junction box REMOTE CONTROL EE–8 switch to the TO BC–312 TELEPHONE or to the TO BC–342 TELEPHONE position.

STEP 5

To turn off the transmitter completely, set the transmitter control switch on Junction Box JB-70–A at TRANS. OFF, and set the transmitter FILAMENT POWER switch at OFF.

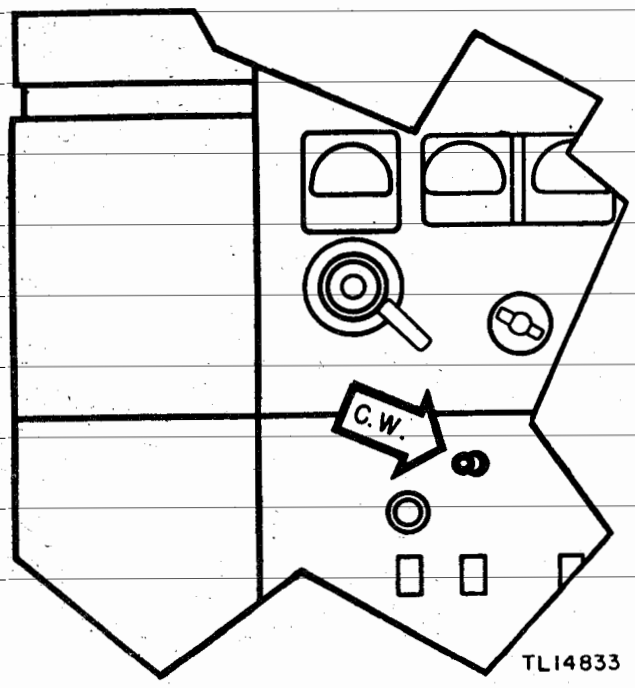

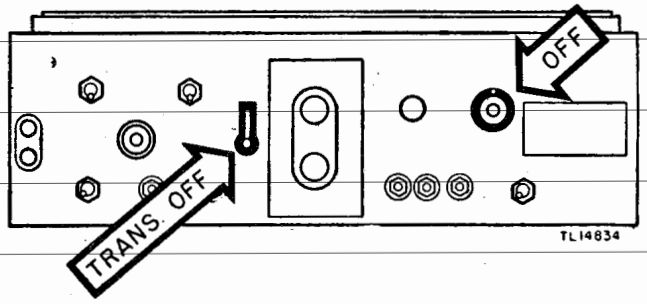

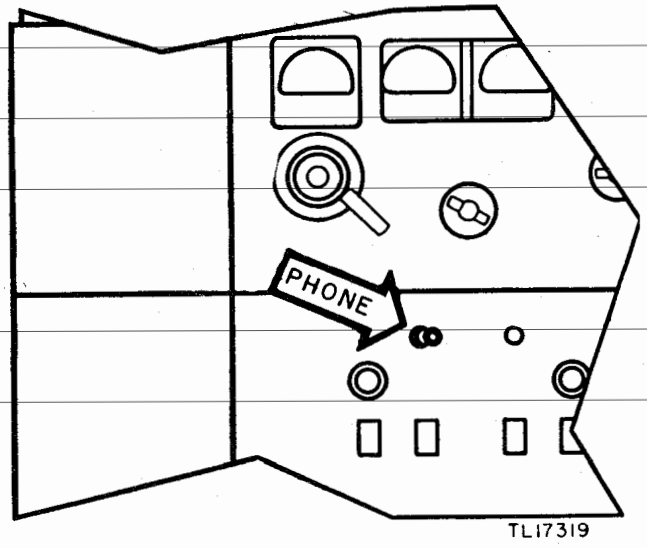

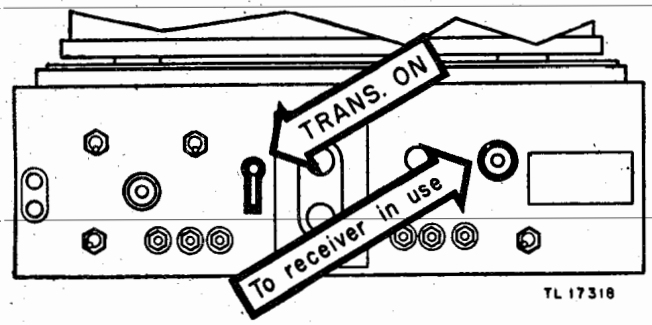

52. Changing Type of Emission

a. CHANGING FROM VOICE TO CONTINUOUS WAVE. After the transmitter has been operated on voice it can be immediately switched to c-w operation by setting the C.W.-PHONE switch at C.W., setting the C.W. SIDETONE switch to the position corresponding to the receiver in use, and setting the transmitter control switch to TRANS. ON.

b. CHANGING FROM CONTINUOUS WAVE TO VOICE. After the transmitter has been operated

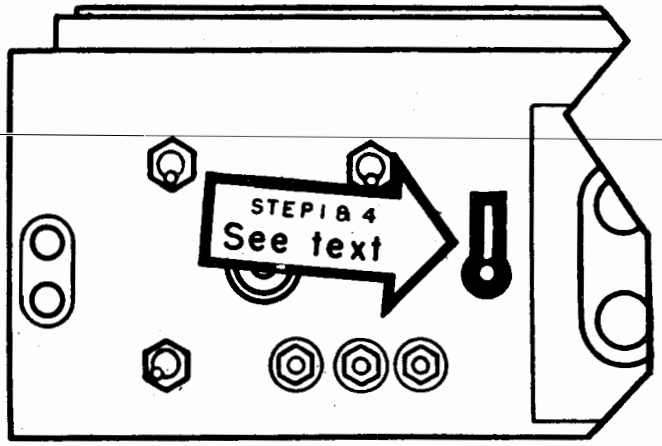

TL14837

on continuous wave, it can be switched immediately to voice by resetting the transmitter control switch at TRANS. OFF, setting the C.W. SIDETONE switch at OFF, and then setting the C.W.-PHONE switch at PHONE.

53. Changing Frequency

a. CASE 1. Provision is made in the transmitter for simultaneously accommodating three

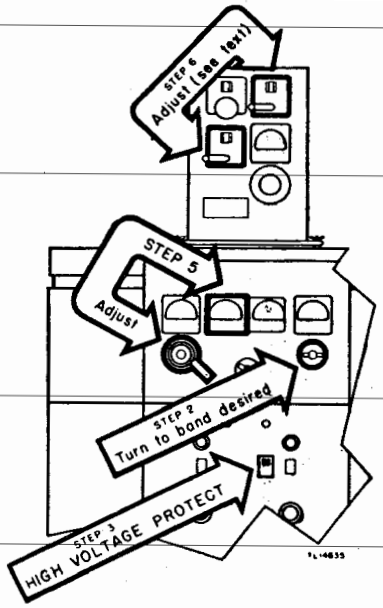

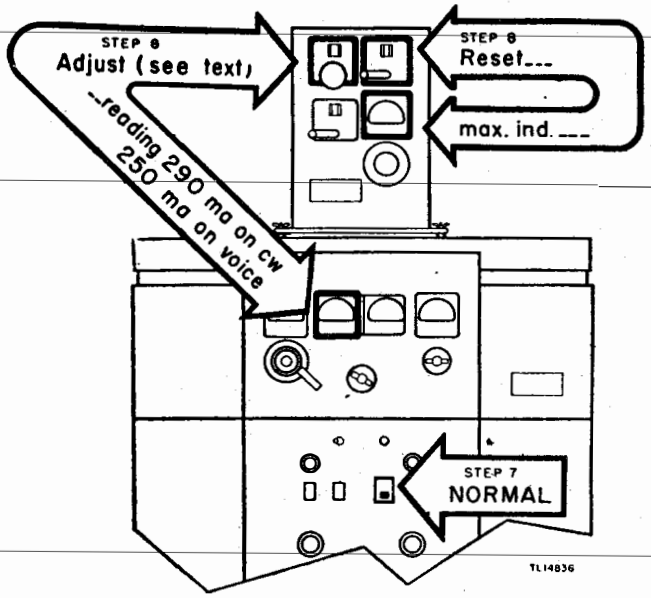

TL14836

tuning units, each of which may be instantly selected by the BAND SWITCH. Each tuning unit may be tuned to a separate frequency and left plugged in ready for use when needed. Since there are three sets of tuning units, it is possible to install three tuning units of the same range which would be covered by one coil unit. With each unit pretuned to a different frequency within the range, change of transmitting frequency is accomplished as follows:

STEP 1
Set the transmitter control switch at TRANS. OFF if operating on continuous wave. Release the microphone switch if operating on voice.

STEP 2
Reset the BAND SWITCH to the desired channel number.

STEP 3
Set the HIGH VOLTAGE PROTECT switch at HIGH VOLTAGE PROTECT.

STEP 4
Set the transmitter control switch to TRANS. ON and close the key if operating on continuous wave. Leave the transmitter control switch at TRANS. OFF and press the microphone switch if operating on voice.

STEP 5
Slightly retune the PLATE TUNING dial for a dip in the P.A. PLATE meter.

STEP 6
Adjust the proper antenna tuning inductor crank for a rise in indication of the P.A. PLATE meter.

STEP 7
Throw the HIGH VOLTAGE PROTECT switch to NORMAL.

STEP 8
Adjust the COUPLING INCREASE control of the antenna tuning unit until the P.A. PLATE meter reads 290 ma (on continuous wave) or 250 ma (on voice). Reset the tuning inductor crank for maximum indication of the ANTENNA CURRENT METER.

Note. When the difference in frequency is small, only steps 1, 2, and 4 may be necessary, though disregarding the other steps is not recommended.

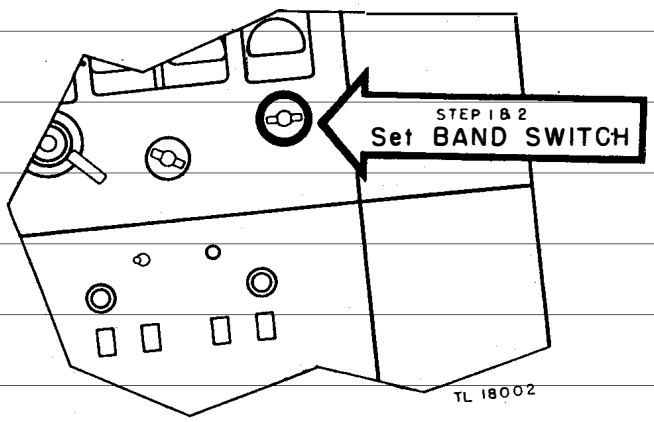

b. CASE 2. When the three tuning units plugged into the transmitter cover two or more different frequency ranges, it is necessary to proceed as follows:

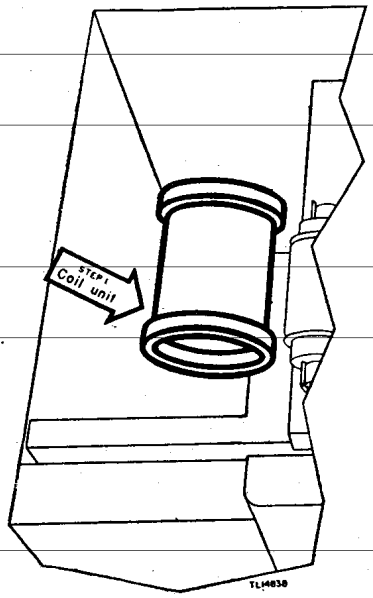

STEP 1
Before moving the BAND SWITCH to the desired channel number, open the cover door over the coil unit and determine whether the frequency range of the coil unit is correct. If not, remove it and replace it in Chest CH–88–A.

STEP 2
Set the BAND SWITCH to the desired channel number.

STEP 3
Install a coil unit of the proper frequency.

STEP 4
Close the cover doors. Set the C.W.-PHONE switch of the transmitter at C.W.

STEP 5
Since the tuning unit has been tuned previously, for c-w operation it will be necessary to tune only the final and antenna circuits as outlined in steps 22 through 31 in paragraph 47. If voice operation is required, throw the C.W.-PHONE switch to PHONE at the completion of step 31, paragraph 47.

54. Presetting Tuning Units

Tuning units may be tuned one after another for m-o operation by following steps 5 through

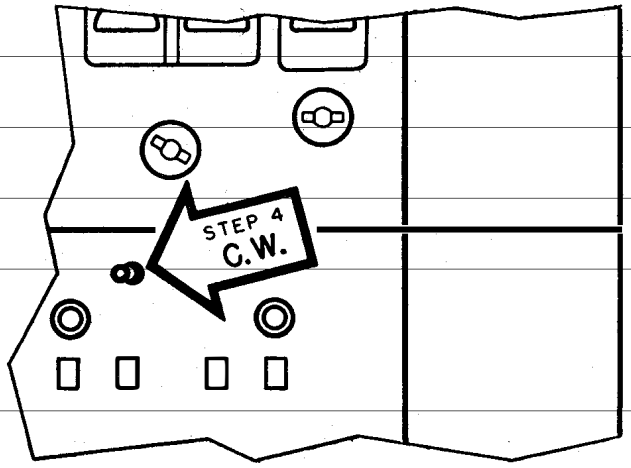

TL 14839

20, paragraph 47, or for crystal-controlled operation by following steps 1 through 4, paragraph 48.

55. Additional Operating Instructions

a. WHEN STATION IS IN MOTION. Speak into the microphone with the lips almost touching it so as to exclude unwanted noises. To avoid over-

modulation, readjust the gain control on the speech amplifier. Use of Microphone T–30 (throat) is also recommended for reducing the effect of external noise.

b. DURING TRANSMISSION ON CRITICAL FREQUENCY. The frequency range of 2 to 2.5 mc is critical in damp weather and at high altitudes because extreme voice peaks may cause flashovers. These trip the overload relay which momentarily interrupts communication until the relay is reset. If this should happen, do one of the following:

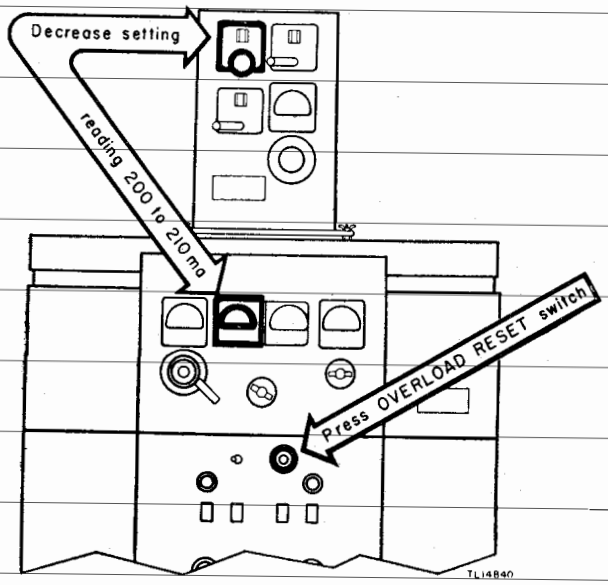

(1) Switch to a more favorable operating frequency.

(2) Stop the truck and transmit from a fixed position after unguying the antenna and inserting one or two Mast Sections MS–54 to provide added height.

(3) Use an auxiliary transmitting antenna.

(4) Decrease the setting of the COUPLING INCREASE control on the antenna tuning unit until the P.A. PLATE meter reads 200 to 210

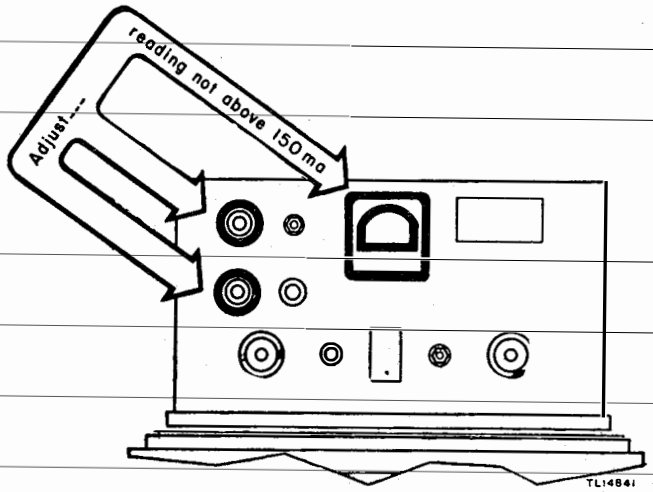

ma. DO NOT REDUCE BELOW 200 MA. Under this condition less modulation is required; therefore the gain control should be adjusted so that voice peaks do not cause swings above 150 ma on the MODULATOR PLATE meter.

c. OVERLOAD RESET SWITCH. If the high-voltage circuits are overloaded (by excessive plate current plus heavy modulation), the overload relay will trip and shut off the plate power. In this case, press the OVERLOAD RESET switch on the front panel of the transmitter and proceed with the transmission. If the overload persists, check tuning adjustments and meter readings.

Section IV. REMOTE CONTROL OPERATION

Note. The description of remote control operation and power source operation for Radio Set SCR–399–A is given below. These instructions will apply equally to Radio Set SCR–499–A if references to the truck are deleted.

56. Connection of Remote Stations

A complete description of the equipment and facilities provided for remote control will be found in paragraphs 16 and 23. Follow the steps below in connecting the remote control equipment.

STEP 1

Remove the unconnected Telephone EE–8–( ) from its mounting compartment in Chest CH–121–A. Before leaving the truck, make sure the telephone batteries are in good condition and the screw switch is set to LB.

STEP 2

Remove Junction Box JB–60–A and Key J–45 from Chest CH–121–A.

STEP 3

Remove Axle RL–27–B from Chest CH–89–A

for use with either or both Reels DR–4 which should be dismounted, as required, from Frame FM–59–A.

STEP 4
Carry Telephone EE–8–( ), Junction Box JB–60–A, and Key J–45 to the point where remote control is to be established.

STEP 5
Connect the cord of Junction Box JB–60–A at terminals L_1 and L_2 of Telephone EE–8–( ).

STEP 6
Insert the plug on the cord from Key J–45 into the jack on Junction Box JB–60–A.

STEP 7
Using Wire W–110–B from Reel DR–4, run the line between the remote station and the radio station in the truck. (If less than one full reel of wire is used, do not cut the wire, but pull out the inner end from the center of the reel.) In some cases it will be more convenient to leave reels of wire in Frame FM–59–A and pay out the wire through the fairleads in the back of the shelter.

STEP 8
Connect the two leads of one end of the line to the two line terminals on Junction Box JB–60–A.

STEP 9
Connect the leads at the other end of the line to terminals marked REMOTE TELEPHONE outside Junction Box JB–70–A. The telephone at the remote station is not connected to the telephone in the truck. Communication between these two points may be established by operating Telephone EE–8–( ) in accordance with instructions contained in TM 11–333.

57. Remote Voice Operation

a. The remote station operator may now request the radio operator at the truck to turn on the radio transmitter for voice operation and to adjust the speech-amplifier gain so that the remote station can properly modulate the transmitter. This is accomplished by following the procedure outlined in step 7, paragraph 49, and in step 4, paragraph 51. It should be noted that both telephones are on the same circuit and accordingly both share the same facilities. Therefore, the radio operator may switch in the output of either receiver so it may be heard at the remote station.

b. Since the transmitter cannot be operated by pressing the microphone switch when using a telephone line, the remote operator should signal the radio station operator when end of transmission is desired. The radio station operator can throw the transmitter control switch to obtain reception or shut down the station, as required.

58. Remote C-W Operation

a. If remote keying of c-w transmission is desired, the radio station operator should be instructed to place the transmitter in c-w operation and to set the REMOTE CONTROL EE–8 switch on Junction Box JB–70–A to either TELEGRAPH position. Then Key J–45 at the remote location can be used to key the transmitter.

b. Remote keying of the transmitter in two-way communication or net operation may be accomplished without the assistance of a radio station operator if there is an independent means of reception at the remote station.

59. Remote Receiver Operation

When necessary, Chest CH–121–A with Radio Receiver BC–312–( ) may be removed from the truck to a remote point for operation. This is accomplished as follows:

STEP 1
Disconnect the antenna lead from the fitting at the top of the chest.

STEP 2
Disconnect the key cord and the main audio cord between Chest CH–121–A and Junction Box JB–70–A.

STEP 3
Disconnect Plug PL–114 of Cord CD–565 from Socket SO–94 on the receiver.

STEP 4
Disconnect the ground strap from the terminal under Chest CH–121–A.

STEP 5
After removing safety wires from wingnuts, loosen the turnbuckles holding Chest CH–121–A to the table frame in Shelter HO–17–A.

STEP 6
Remove Chest CH–121–A from the shelter.

STEP 7
Remove Chest CH–109–A (12-volt battery) after pulling out the plug of Cord CH–659.
STEP 8
Remove the four legs from the top of Chest CH–120–A and one each Mast Sections MS–51, MS–52, and MS–53 from Chest CH–89–A.
STEP 9
Move the two chests, the legs, the mast sections, and Cover BG–143–A to the desired location.
STEP 10
Set up Chest CH–121–A on its legs. (See fig. 13.)
STEP 11
Remove Cord CD–690 from Chest CH–121–A and connect it between Chest CH–109–A and the receiver.
STEP 12
Screw the mast sections together and into the fitting in the top of Chest CH–121–A.
STEP 13
Remove the headset from Chest CH–121–A and plug it into the PHONES jack on Radio Receiver BC–312–( ). The receiver is now ready for operation.
STEP 14
If the radio station is to be operated with Chest CH–109–A removed as described above, turn the switch on Rectifier RA–63–(*) to FULL CHARGE to furnish 12-volt power for relays.

Section V. POWER SOURCE OPERATION

60. Operation from Commercial Power Source

Operation from a 117-volt, 50/60-cycle, single-phase, a-c commercial source may be effected as follows:

a. Plug one end of Cord CD–652 into the power plug at the rear of the truck and plug Cord CD–314 into the other end of the power plug.

b. Connect the leads from the other end of Cord CD–314 directly to the source of power.

61. Operation of Trailer 100 Feet From Truck

a. Disconnect the trailer power Cord CO–316 from Cord CO–335 at the bumper clamp underneath the rear of the truck. (See fig. 27.) Also disconnect the cable which delivers power to the running lights on the trailer.

b. Unhitch the trailer from the truck.

c. Drive the truck to any point up to 100 feet from the trailer.

d. Remove Cord CD–652 from Chest CH–119–A.

e. Insert one end into the plug in the bumper bracket of the truck, then insert the other end into the plug on the power cord of the trailer. Operation may now proceed normally with remote control of the power unit from the transmitter location.

62. Operation of Trailer 200 Feet From Truck

a. Proceed as in paragraph 61*a* and *b*, but drive the truck to any point within 200 feet of the trailer.

b. Remove Cord CD–652 from Chest CH–119–A, Cord CO–314 from the seat bench, and Cord CO–313 from Chest CH–112–A in the trailer.

c. Insert one end of Cord CD–652 into the power plug at the rear of the truck. Insert the plug of Cord CO–314 into the other end of this cord.

d. Twist the leads of Cord CO–314 around the terminals of Cord CO–313 and tape up these connections.

e. Insert the plug of Cord CO–313 into the power plug at the trailer. Operation of the power unit at distances greater than 100 feet is an emergency measure, and is not ordinarily used. Therefore it will be necessary to start or stop Power Unit PE–95–( ) at the trailer instead of at the transmitter location.

63. Use of Power Unit PE–95–( ) to supply power to Auxiliary Equipment

a. If the radio set is not in use, power may be supplied at distances up to 200 feet from Power Unit PE–95–( ) as follows:

(1) Remove the plug of the trailer power cord from the plug at the rear of the truck.

(2) Connect one end of Cord CD–652 to the trailer power cord.

(3) Plug Cord CO–313 into the other end of Cord CD–652. Connect the load to the terminals at the end of Cord CO–313 and start the power unit.

b. If Radio Set SCR–399–A or SCR–499–A must be used while the auxiliary power is being generated, proceed as follows:

(1) Leave the trailer connected and hitched to the truck.

(2) Connect the terminals of Cord CO–313 to the a-c terminals on the power panel of Power Unit PE–95–( ).

(3) Plug Cord CO–314 into the other end of Cord CO–313.

(4) Connect the bare ends of Cord CO–314 to the load. With the radio set and the heater in operation, this additional load should not exceed 1 kilowatt. If the heater is not being used, the total external load may be 2.5 kilowatts. Before operating in this manner, check the rated capacity of the power unit.

64. Operation of Low-voltage Power Supply System

a. The 12-volt battery system is used to furnish power for Radio Receiver BC–312–( ), as well as for operating the keying relay and the disabling relays.

b. With the BATTERY SOURCE switch on Junction Box JB–70–A at AUX. (par. 42*e*), the 12-volt supply is obtained from the 12-volt battery in Chest CH–109–A.

c. Rectifier RA–63–(*) charges the battery in Chest CH–109–A. When using this battery, turn the switch on the rectifier to TRICKLE. If the battery is low, set the switch on the rectifier at HI CHARGE.

d. Keep the battery fully charged at all times. Do not let the level of the electrolyte fall so low that the plates become uncovered. Check the state of charge of the battery with the hydrometer provided.

e. Some Power Units PE–95–( ) are provided with 12-volt terminals. With Cord CO–316 connected to these terminals, the 12-volt supply may be obtained from the power unit by setting the battery switch on Junction Box JB–70–A to PE–95.

f. With Chest CH–121–A and Chest CH–109–A removed from the shelter as described in paragraph 59, the 12-volt supply for the radio station relays is obtained from Rectifier RA–63–(*) with its switch set at HI CHARGE.

Section VI. EQUIPMENT PERFORMANCE CHECK LIST

65. Purpose and Use

a. GENERAL. The equipment performance check list (par. 66) will help the operator determine whether Radio Set SCR–399–A or SCR–499–A is functioning properly. The check list gives the item to be checked, the conditions under which the item is checked, the normal indications and tolerances of correct operation, and the corrective measures that the operator can take. Items 1 to 28 are checked before starting, items 29 to 34 when starting, items 35 to 44 during operation, and items 45 to 49 when stopping. Items 35 to 44 on this check list should be checked at least once during a normal operating period or at least four times a day during continuous operation.

b. ACTION OR CONDITION. For some items the information given in the action or condition column consists of the settings of various switches and controls under which the item is to be checked. For other items it represents an action that must be taken in order to check the normal indication given in the normal indication column.

c. NORMAL INDICATIONS. The normal indications listed include the visible and audible signs that the operator will perceive when he checks the items. In the case of meter readings, the allowable tolerances of the readings are given. When a meter reads between the limits specified, operation can be considered satisfactory. A meter reading outside the limits given is a sign of impending trouble. If the indications are not normal, the operator should apply the recommended corrective measures.

d. CORRECTIVE MEASURES. The corrective measures listed are those that the operator can make without turning the equipment in for repairs. A reference to part five in the table indicates that the correction of the trouble cannot be effected during operation and that trouble shooting by an experienced repairman is called for. If the set is completely inoperative or if the recommended corrective measures do not yield results, trouble shooting is necessary. However, if the tactical situation requires that communication be maintained and if the set is not completely inoperative, the operator must maintain the set in operation as long as it is possible to do so.

e. ITEMS 1 TO 34. Items 1 to 34 should be checked each time the equipment is put into operation.

f. ITEMS 35 TO 38. Items 35 to 38 show correct meter readings when the transmitter is properly tuned and in operation.

g. ITEMS 39 TO 44. These items represent general operating characteristics of the radio set. The operator must become familiar with the characteristics of the set during normal opera-

tion; he must use that knowledge as a basis for recognizing changes in audible and visible indications, such as relay clicks, sidetone, flicking of the meter needles, etc., when the set is not operating properly. By becoming familiar with the operation of the receiver, the operator will know the normal position of the VOL control. This will aid in determining the sensitivity and amplification of the receiver.

h. ITEMS 45 TO 49. Items 45 to 49 are checked whenever the station is taken out of operation. Any abnormal indications at this time are probably caused by trouble in the set and should be corrected before the next expected period of operation.

66. Check List

a. POWER UNIT PE–95–( )

	Item No.	Item	Action or condition	Normal indications	Corrective measures
PREPARATORY	1	CIRCUIT BREAKER ON-OFF switch. (Main power switch if commercial power source is used)	Set at ON		

b. JUNCTION BOX JB–70–A

	Item No.	Item	Action or condition	Normal indications	Corrective measures
PREPARATORY	2	Transmitter control switch	Set at TRANS. OFF		
	3	C.W. SIDETONE switch	Set at OFF for voice transmission. Set at TO BC–312 or TO BC–342 for c-w transmission		
	4	REMOTE CONTROL EE–8 switch	*a.* Set at NORMAL unless remote control operation of transmitter is desired *b.* Set at TO BC–312 TELEPHONE or TO BC–342 TELEPHONE for remote voice operation *c.* Set to proper TELEGRAPH position for remote c-w operation		
	5	Keys J–37	Keys plugged in KEY jacks		
	6	BATTERY SOURCE switch	*a.* Set at PE–95 if 12-volt supply of Power Unit PE–95–( ) is used *b.* Set at AUX. if 12-volt supply in Chest CH–109–A is used		
	7	RECEIVER OUTPUT switch	Set at NORMAL		
	8	Headsets HS–30–( )	Headsets plugged into proper HEADSETS jacks (one on either side of START-STOP switch)		
	9	RECEIVER DISABLING switches	Set both switches at ON		
	10	RECEIVER OUTPUT switch	Set at NORMAL unless headsets are to be transposed		

66. Check List (Cont'd)

c. Rectifier RA–63–(*)

	Item No.	Item	Action or condition	Normal indications	Corrective measures
PREPARATORY	11	Main control switch	If 12-volt battery in chest is used, set switch at TRICKLE		

d. Radio Receivers BC–312–( ) and BC–342–( )

	Item No.	Item	Action or condition	Normal indications	Corrective measures
PREPARATORY	12	SEND-REC. switches	Set both switches at SEND		
	13	BAND CHANGE switches	Set to correct band		
	14	FAST TUNING control	Set to approximate frequency required		
	15	C.W.–OSC. switch	*a.* Set at ON for c-w reception		

e. Radio Transmitter BC–610–E

	Item No.	Item	Action or condition	Normal indications	Corrective measures
PREPARATORY	16	FILAMENT POWER switch	Set at OFF (down)		
	17	PLATE POWER switch	Set at OFF (down)		
	18	EXCITER PLATE POWER switch	Set at NORMAL (down)		
	19	HIGH VOLTAGE PROTECT switch	Set at NORMAL (down)		
	20	C.W.–PHONE switch	Set at C.W. or PHONE, as desired		
	21	Tuning units	Check selection of proper tuning unit		
	22	BAND SWITCH	Set to channel corresponding to desired tuning unit		
	23	Coil unit	Check selection of proper coil unit for frequency desired		
	24	M.O.–XTAL switch of tuning unit	*a.* Set switch at M.O. for master-oscillator control *b.* Set switch at XTAL for crystal-frequency control. Check selection of proper crystal holder for frequency desired		
	25	PLATE TUNING wheel	Has been set to proper reading		

66. Check List (Cont'd)

f. Antenna Tuning Unit BC–939–A

	Item No.	Item	Action or condition	Normal indications	Corrective measures
PREPARATORY	26	Antenna range switch	Set to desired band		
	27	COUPLING INCREASE knob	Has been set to desired position		
	28	FREQUENCY crank	Crank for band being used has been set to desired position		

g. Junction Box JB–70–A

	Item No.	Item	Action or condition	Normal indications	Corrective measures
START	29	START button	Push START button to control Power Unit PE–95–( )	Power Unit PE–95–( ) starts Normal line voltage (11 –125 volts) indicated on A.C. VOLTAGE meter on Power Unit PE–95–( ) panel	*a.* Check Cords CO–335 and CO–316 *b.* Check for discharged battery in Power Unit PE–95–( )
	30	Electric lights	Turn on electric lights in Chest CH–12 –A, in Chest CH–121–A, and in shelter over transmitter	Lamps light up	Change lamps Check associated cords and plugs

h. Radio Transmitter BC–610–E

	Item No.	Item	Action or condition	Normal indications	Corrective measures
START	31	FILAMENT POWER switch	Set switch at ON. (Wait 1 minute for filaments to reach operating temperature. Wait 30 minutes if transmitter is damp)	*a.* Green pilot lamp and PLATE TUNING dial on transmitter light	*a.* If only one lamp lights, replace the other lamp. If both lamps are out, check Fuses FS_1, 2, 4, and Cord CD–763. Check that V_{13}, V_{14}, and V_{15} are firmly seated in their sockets
				b. Red pilot lamp on Speech Amplifier BC–614–E lights	*b.* Replace lamp if lamps in *a* above light
				c. FIL. VOLTAGE meter reads 5 to 5.3 volts	*c.* Adjust FILAMENT VOLTAGE control

i. Junction Box JB–70–A

	Item No.	Item	Action or condition	Normal indications	Corrective measures
START	32	Transmitter control switch	*a.* For c-w transmission, set at TRANS. ON *b.* For voice transmission, set at TRANS. OFF	*a.* Red pilot lamp on transmitter lights. Plate power relay RY_1 clicks *b.* Red pilot lamp is out	*a.* If the relay clicks but the red pilot does not light, check fuse FS_3. (See ch. 5) *b.* See chapter 5

66. Check List (Cont'd)

j. Radio Receivers BC-312-( ) and BC-342-( )

	Item No.	Item	Action or condition	Normal indications	Corrective measures
START	33	OFF-M.V.C.-A.V.C. switch	Turn to M.V.C. or A.V.C. position. (If Radio Receiver BC-312-( ) is used, set Rectifier RA-63-(*) switch at HI CHARGE)	Dial lights unless dial light switch is provided. If Radio Receiver BC-312-( ) is used, the dynamotor starts	Check panel fuses. Check Cords CD-565 and CD-566 and associated plugs
	34	VOL control	Rotate clockwise	Signal or noise is heard.	See TM 11-850

k. Radio Transmitter BC-610-E

	Item No.	Item	Action or condition	Normal indications	Corrective measures
EQUIPMENT PERFORMANCE	35	EXCITATION METER SWITCH	Key J-37 held closed or microphone press-to-talk switch operated. EXCITATION METER SWITCH set to—		*a.* If the meter does not indicate in any position, check— (1) The installation and tuning of the tuning unit (2) The setting of the BAND SWITCH (3) The position of the M.O.-XTAL switch on the tuning unit *b.* If the meter readings are improper, retune the transmitter, replace V_8, V_9, V_{10}, or V_{11} if necessary
			a. DOUBLER PLATE	*a.* 25 to 45 ma.	
			b. INT. AMP. GRID.	*b.* 1 to 8 ma.	
			c. INT. AMP. PLATE.	*c.* 125 to 175 ma.	
			d. P.A. GRID.	*d.* 60 to 100 ma.	
	36	P.A. PLATE meter	*a.* Voice operation; microphone press-to-talk switch operated	*a.* 200 to 260 ma.	Retune transmitter. Check coil unit L_7. Operate OVERLOAD RELAY. Check antenna coupling. Replace V_6, V_7, or V_{16} if necessary. (See ch. 5)
			b. C-w operation; Key J-37 closed	*b.* 200 to 300 ma.	

l. Antenna Tuning Unit BC-939-A

	Item No.	Item	Action or condition	Normal indications	Corrective measures
EQUIPMENT PERFORMANCE	37	ANTENNA CURRENT meter	Key J-37 held closed or microphone press-to-talk switch operated. Operating frequency is—	ANTENNA CURRENT meter reads:	Check control settings, tuning, coupling, and antenna range switch. (See ch. 5)
			a. 2 to 8 meg.	*a.* 7 to 14 amp.	
			b. 8 to 12 meg.	*b.* 5 to 12 amp.	
			c. 12 to 18 meg.	*c.* 2½ to 10 amp.	

66. Check List (Cont'd)

m. Speech Amplifier BC-614-E

	Item No.	Item	Action or condition	Normal indications	Corrective measures
EQUIPMENT PERFORMANCE	38	MODULATOR PLATE meter	Microphone press-to-talk switch operated and— *a.* With no modulation	MODULATOR PLATE meter reads— *a.* 35 to 50 ma.	*a.* Check fuse FS_5 and adjustment of MODULATOR BIAS control
			b. With modulation	*b.* 200 ma on voice peaks	*b.* Check gain control of CARBON MIC. 1 or DYNAMIC MIC. 2, tube V_5, and fuse FS_5. (See ch. 5)

n. Junction Box JB-70-A

	Item No.	Item	Action or condition	Normal indications	Corrective measures
EQUIPMENT PERFORMANCE	39	Key J-37 (c-w operation)	Key operated	Sidetone is heard. Relays in junction box and receiver click. P.A. PLATE, EXCITATION, and ANTENNA CURRENT meter needles flick. The receivers are disabled.	Check key cord, plug, and jack. (See ch. 5)
	40	Microphone (voice operation)	Press-to-talk switch operated	Meters indicate as in items 35 to 38. Receivers are disabled	Check microphone cord, Amphenol plug and receptacle

o. Receivers BC-312-( ) and BC-342-( )

	Item No.	Item	Action or condition	Normal indications	Corrective measures
EQUIPMENT PERFORMANCE	41	VOL control	Control rotated clockwise	Increased output is heard in the headset or loudspeaker	Tighten setscrew. See TM 11-850
	42	Headset or loudspeaker	Set operating normally. Plug inserted completely	Signal is heard	Check plug and cable connections. Tune receiver
	43	ALIGN INPUT control	When rotated	Response varies	See TM 11-850
	44	CRYSTAL PHASING control (when provided)	When rotated	Response varies	See TM 11-850

p. Junction Box JB-70-A

	Item No.	Item	Action or condition	Normal indications	Corrective measures
STOP	45	Transmitter control switch	Set to TRANS. OFF	Red pilot lamp goes out	See chapter 5

66. Check List (Cont'd)

q. Radio Transmitter BC–610–E

	Item No.	Item	Action or condition	Normal indications	Corrective measures
STOP	46	FILAMENT POWER switch	Set to OFF	*a.* Green pilot lamp and PLATE TUNING dial lamp go out *b.* Pilot lamp on Speech Amplifier BC–614–E goes out *c.* No voltage indication on FIL. VOLTAGE meter	See chapter 5

r. Receivers BC–312–( ) and BC–342–( )

	Item No.	Item	Action or condition	Normal indications	Corrective measures
STOP	47	OFF–M.V.C.–A.V.C. switch	Turn to OFF position	Receiver turned off	See TM 11–850

s. Junction Box JB–70–A

	Item No.	Item	Action or condition	Normal indications	Corrective measures
STOP	48	STOP button	Push red STOP button	Power Unit PE–95–( ) stops	See chapter 5

t. Rectifier RA–63–(*)

	Item No.	Item	Action or condition	Normal indications	Corrective measures
STOP	49	Main control switch	Set at OFF. Check the battery with the hydrometer	1.265 specific gravity at 70° F	Recharge the battery with Rectifier RA–63–(*). Add distilled or battery-approved water to the battery if insufficient liquid is present to obtain a reading on the hydrometer

CHAPTER 3

PREVENTIVE MAINTENANCE

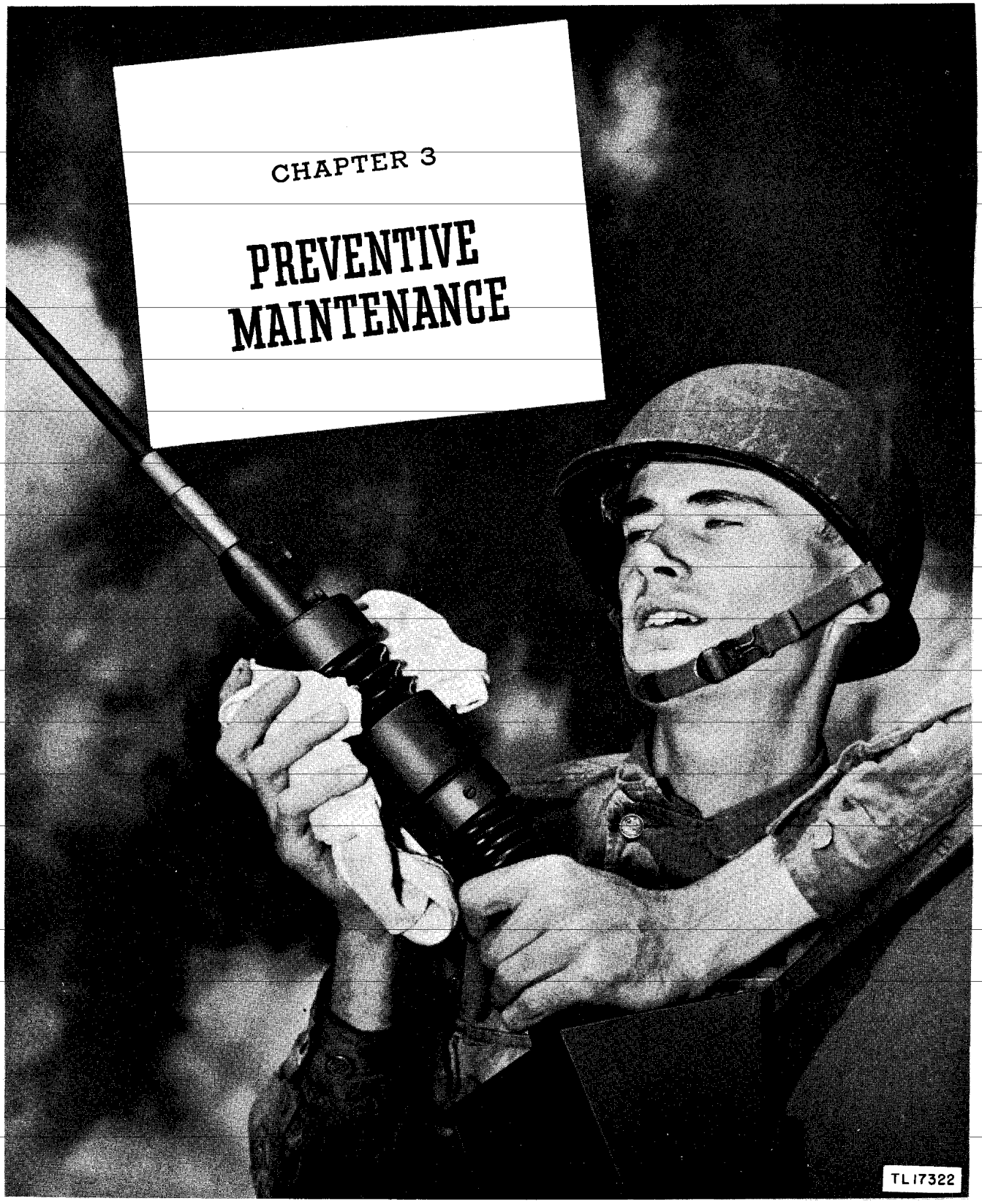

CHAPTER 3

PREVENTIVE MAINTENANCE

Section I. PREVENTIVE MAINTENANCE TECHNIQUES

67. Meaning of Preventive Maintenance

Preventive maintenance is a systematic series of operations performed at regular intervals on equipment, when turned off, to eliminate major break-downs and unwanted interruptions in service, and to keep the equipment operating at top efficiency. To understand what is meant by preventive maintenance it is necessary to distinguish between preventive maintenance, trouble shooting, and repair. The prime function of preventive maintenance is to *prevent* break-downs and therefore the need for repair. On the other hand, the prime function of trouble shooting is to locate *existing* defects making repairs possible. The importance of preventive maintenance cannot be overemphasized. The entire system of radio communication depends on each set's being *on the air* when it is needed and also upon its *operating efficiency*. It is vitally important that radio operators and repairmen maintain their radio sets properly.

Note. The operations in sections I and II are considered first and second echelon (organization operators and repairmen) maintenance. Some operations in sections III and V are considered higher echelon maintenance.

68. Description of Maintenance Techniques

a. GENERAL. Most of the electrical parts in Radio Sets SCR–399–A and SCR–499–A require routine preventive maintenance. Those requiring maintenance differ in the amount and kind required. Because hit-or-miss maintenance techniques cannot be applied, definite and specific instructions are needed. This section of the manual contains these specific instructions and serves as a guide for personnel assigned to perform the six basic maintenance operations, namely: FEEL, INSPECT, TIGHTEN, CLEAN, ADJUST and LUBRICATE. Throughout this manual the lettering system for the six operations will be as follows:

F—Feel	C—Clean
I—Inspect	A—Adjust
T—Tighten	L—Lubricate

The first two operations establish the need for the other four. The selection of operations is based on a general knowledge of field needs. For example, the dust encountered on dirt roads during cross-country travel filters into the equipment no matter how much care is taken to prevent it. Rapid changes in weather (such as heavy rain followed by blistering heat) excessive dampness, snow, and ice tend to cause corrosion of exposed surfaces and parts. Without frequent inspections and the necessary performance of tightening, cleaning, and lubricating operations, the equipment will become undependable, and subject to break-down when the equipment is most needed.

b. FEEL. The feel operation is used most often to check rotating machinery, such as blower motors, drive motors, etc., and to determine whether electrical connections, bushings, etc., are overheated. Feeling indicates the need for lubrication or the existence of similar types of defects requiring correction. The maintenance man must become familiar with the normal operating temperatures of motors, etc., in order to recognize signs of overheating.

Note. It is important that the feel operation be performed as soon as possible after shut-down and always before any other maintenance is done.

c. INSPECT. Inspection is the most important operation in the preventive maintenance program. A careless observer will overlook the evidences of minor troubles. Although these defects may not interfere with the performance of the equipment, valuable time and effort can be saved if they are corrected before they lead to major break-downs. Make every effort to become thoroughly familiar with the indications of normal functioning, in order to be able to recognize the signs of a defective set. Inspection consists of carefully observing all parts of the equipment, noticing their color, placement, state of cleanliness, etc. Inspect for the following conditions:

(1) Overheating, as indicated by discoloration, blistering, or bulging of the parts or surface of the container; leakage of insulating

compounds; and oxidation of metal contact surfaces.

(2) Placement, by observing that all leads and cables are in their original positions.

(3) Cleanliness, by carefully examining all recesses in the units for accumulation of dust, especially between connecting terminals. Parts, connections, and joints should be free of dust, corrosion, and other foreign matter. In tropical and high-humidity locations, look for fungus growth and mildew.

(4) Tightness, by testing any connection or mounting which appears to be loose.

d. TIGHTEN, CLEAN, AND ADJUST. These operations are self-explanatory. Specific procedures to be followed when performing them are given wherever necessary throughout this section.

Caution: Screws, bolts, and nuts should be tightened carefully. Fittings tightened beyond the pressure for which they are designed will be damaged or broken.

Whenever a loose connection is tightened, it should be moistureproofed and fungiproofed again by applying the varnish with a small brush. See section V for details of moistureproofing and fungiproofing.

e. LUBRICATE. Lubrication refers to the application of grease or oil to the bearings of motors or other rotating shafts. It may also mean the application of a light oil to door hinges or other sliding surfaces on the equipment.

69. Recommended Lubricants

The following table lists the lubricating material necessary in servicing the equipment:

Approved Symbol	Standard nomenclature	Specification No.
OE 30	Oil, Engine, SAE 30	U. S. Army 2–104B
OE 10	Oil, Engine, SAE 10	U. S. Army 2–104B
PS	Oil, Lubricating, Preservative, Special	U. S. Army 2–120
GL	Grease, Lubricating, Special Ordnance	AXS–637
SD	Solvent, Dry-cleaning	Federal P–S–661a

70. Vacuum Tubes

Note. Avoid doing work on the tubes immediately after shut-down. Severe burns may result from contact with the envelopes of hot tubes.

a. INSPECT (I). (1) Inspect glass and metal tube envelopes, tube caps, and tube connector clips for accumulation of dirt and for corrosion. Tubes with loose plate caps, grid caps, or envelopes should be replaced if possible.

(2) Examine the spring clips that make contact with the grid caps for corrosion and for loss of tension. Check the condition of the wires soldered to the spring clips. The wires should be free from frayed insulation and broken strands.

(3) Inspect the firmness of tubes in their sockets. Make the inspection by pressing the tubes down in the sockets and testing them in that position; *not* by partially withdrawing the tubes and jiggling them from side to side. Movement of a tube tends to weaken the pins in the base and unnecessarily spread the contacts in the socket. It is desirable to inspect the sockets of the tubes at the time the tubes are removed.

(4) When it is necessary to remove a tube from its socket, especially if it is a high-power tube, great care must be used. Never jar a warm tube. Connections to the grid caps and plate caps must always be removed.

b. TIGHTEN (T). Tighten all loose connections to the tube sockets or to the tubes. If the connections are dirty or corroded, clean before tightening. When tightening locknuts that hold the sockets to the insulated bushings, do not apply excessive pressure. Too much pressure will crack the bushings.

c. CLEAN (C). (1) Clean the tubes only if inspection shows cleaning to be necessary. Tubes operated at high voltages and with exposed plate and grid connections must be kept free of dirt and dust because of possible leakage between grid and plate terminals. Tubes operating at low voltages and not having exposed grid and plate caps do not require frequent cleaning. However, do not permit dirt to accumulate on low-voltage tubes.

(2) Remove dust and dirt from the glass or metal envelopes with a clean, lint-free, dry cloth. If proper care is exercised, the grid and plate caps may be cleaned with a piece of #0000 sandpaper. Wrap the paper around the cap and *gently* run along the surface. Excessive pres-

sure is not needed; do not grip the cap tightly. Wipe with a clean dry cloth.

(3) When tube sockets are cleaned and the contacts are accessible, fine sandpaper may be used to remove corrosion, oxidation, and dirt.

d. ADJUST (A). Adjust loose tube connector clips. Do not flatten tube connector clips during adjustment. Flattened clips do not make adequate contact with the surface of the tube cap. If the clip is made of thin metal, it can be adjusted by gently compressing it with the fingers. If it is made of heavy-gauge metal, suitable pressure can be applied with a pair of long-nose pliers.

71. Capacitors

a. INSPECT (I). (1) Inspect the terminals of large fixed capacitors for corrosion, loose connections, cracks, and breakage. Carefully inspect the mountings to discover loose mounting screws, studs, or brackets. Examine the leads for poor insulation, for cracks, and for evidences of decay. Cut away frayed strands on the insulation. If the wire is exposed, wrap it with friction tape.

(2) Inspect the case of each large fixed capacitor for leaks, bulges, and discoloration.

(3) Inspect the plates of variable capacitors for dirt, dust, or lint. Examine the movable set of plates for signs of damage or misalignment that would cause them to touch the fixed plates during tuning. Rotate the movable plates, using the panel tuning control, and thus check for operation of the capacitor.

b. TIGHTEN (T). Tighten loose terminals, mountings, and connections on the capacitors. Do not break the bushing or damage the gasket.

c. CLEAN (C). (1) Clean the cases of fixed capacitors, the insulating bushings, and connections that are dirty or corroded. The capacitor cases and bushings can usually be cleaned with a dry cloth, but if the deposit of dirt is hard to remove, moisten the cloth in a dry-cleaning solvent.

(2) Clean the plates of variable capacitors with a small brush, removing all dust and lint.

72. Resistors

a. INSPECT (I). Inspect the coating of the vitreous-enameled resistors for signs of cracks and chipping, especially at the ends. Examine the bodies of all types of resistors for blistering, discoloration, and other indications of overheating. Inspect leads and all other connections for corrosion, dirt, dust, looseness, and broken strands in the connecting wires. Check the security of all mountings. Do not attempt to move resistors with pigtail connections, because there is danger of breaking the connections at the point where they enter the body of the resistor. Such defects cannot be repaired.

b. TIGHTEN (T). Tighten resistor connections and mountings whenever they are found loose. If a resistor is allowed to remain loose, vibration may break the connection or damage the body.

c. CLEAN (C). (1) Clean all carbon resistors with a small brush.

(2) Vitreous-enameled resistors must be kept clean to avoid leakage between the terminals. They are ordinarily wiped with a clean dry cloth. However, if the dirt deposit is unusually hard to remove, use a dry-cleaning solvent.

(3) Resistors with discolored bodies cannot be cleaned. Discoloration indicates that there has been overloading and overheating at some time prior to the inspection. The discoloration is probably due to circuit trouble which requires analysis and correction. Trouble-shooting procedures are described in chapter 5.

73. Fuses

a. INSPECT (I). Inspect the fuse caps for evidence of burning. Any evidence of burning indicates that the fuse contact is not tight. Examine the fuses and holders for signs of corrosion, dirt, loose connections, and loss of spring clip tension.

b. CLEAN (C). Clean fuse ends and fuse clips with #0000 sandpaper; then wipe them with a clean cloth. If the fuse clips are burned and pitted, use a fine file to dress the clips properly, and finish with emery cloth to leave a smooth surface. Be sure to remove all traces of emery dust because emery dust is a good conductor of electricity and may cause short circuits.

c. TIGHTEN (T). Tighten all loose wire connections to the fuses. Make certain that all connections are clean before tightening.

d. ADJUST (A). Adjust the spring tension on the fuse clips if necessary. Use a pair of long-nose pliers for this operation. Do not flatten the clip while adjusting because a flattened clip makes poor contact.

74. Bushings and Insulators

a. DESCRIPTION. (1) Insulated bushings are used in the high-voltage and r-f circuits. They are constructed of ceramic material with a glazed surface. Because an insulator is no better than its surface, deposits of foreign substances on the surface will materially reduce the insulation value of the bushing. Therefore, it is very important that all bushings used in the high-voltage circuits be inspected frequently.

(2) Insulator bushings are used as supports for high-voltage tube sockets, for high-voltage terminals of capacitors, and for tank coils. They are used as mountings for resistors in high-voltage circuits and as supports for panels which mount other parts. The condition of insulator bushings that are used solely as panel supports is not critical, but the condition of bushings used as high-voltage insulators is extremely important.

b. INSPECT (I). Inspect the physical condition of the insulator bushings. They should be clean and free from cracks or chips. It is possible for a highly glazed insulator to develop fine-line surface cracks where moisture and dust will accumulate and eventually form a leakage for a high-voltage flash-over. Consequently, the surface of the bushings must be inspected to detect such cracks. As a rule, the bushings are held in position with nuts screwed onto the threaded conductors. These bushings can be replaced very easily by unscrewing the nuts. If replacement is not possible because of a shortage of supplies, frequently clean the defective bushing thoroughly with dry-cleaning solvent. Sometimes it is difficult to see dust on a glazed surface. A satisfactory check can be made by sliding a clean finger across the bushing.

c. TIGHTEN (T). The procedure to be used in tightening loose bushings is self-evident. However, one precaution must be observed. *Do not force the nuts or screws down too tight.* Excessive pressure exerted on the bushings will cause damage. If the threads on bushing stud bolts are found stripped so that they cannot be tightened, replace the entire bushing.

d. CLEAN (C). Insulating bushings are easily cleaned. Never use abrasive materials because the glazed finish will be destroyed. A clean cloth is usually satisfactory. If deposits of grime or dirt on the surface of a bushing are hard to remove, use dry-cleaning solvent. After the surface has been cleaned with a solvent, it should be carefully polished with a clean dry cloth. Otherwise, a thin film of the solvent will be left which will impair the effectiveness of the bushing as a high-voltage insulator.

75. Relays

a. GENERAL. Relays normally require very little attention. Extreme care should be used during all operations of preventive maintenance; otherwise, these same operations may result in trouble that would not have existed if the relay had not been tampered with.

b. INSPECT (I). Inspect the mechanical action of the relays to make certain that when the moving and stationary contacts come together they make positive contact and are directly in line with each other. Inspect the contacts for dust that may result in poor contact or arcing. Do not mistake the brown stain often found on silver contacts for corrosion. This brown stain is silver oxide and is a good conductor.

c. TIGHTEN (T). Tighten all loose connections and mounting screws, but do not apply enough force to damage the screw or to break the parts it holds.

d. CLEAN (C). Brush the exterior of the relay with a soft brush to remove dust. If inspection shows that the contacts require cleaning, clean them with a strip of white paper placed between the contacts. Close the contacts on the paper just enough to grip the paper snugly, and draw the paper between the contacts. Dry-cleaning solvent may be used on the paper if corrosion is present or if dirt deposits are not readily removed with the dry paper. If the contacts are burned or pitted, they may be dressed down with a fine file followed with a burnishing tool and crocus cloth.

e. ADJUST (A). Adjust the contacts of the relays *only* if they do not close evenly and securely. Too frequent adjustment of the relays usually results in equipment failure.

76. Switches

a. INSPECT (I). (1) Inspect the mechanical action of each switch and, while doing so, look for signs of dirt or corrosion on all exposed elements. In some cases, examine the elements of the switch visually; in others, check the action of the switch by flipping the control knob or toggle, or press the switch button and note the

freedom of movement and the amount of spring tension.

(2) Examine the ganged multiple-section switches to see whether they are properly lubricated and whether the contacts are clean. The inspection is visual. Do not pry the leaves of the switch apart. The rotary members should make good contact with the stationary members; and as the former slides into the latter, a spreading of the stationary contact leaves should be noticeable. The switch action should be free. The wiping action of the contacts usually removes any dirt at the point of contact.

b. CLEAN (C). With a small brush, clean dust and dirt from all switches. Be very careful while brushing around exposed contacts.

c. LUBRICATE (L). If necessary, lubricate the bearing surfaces of the multiple-section switches (such as the BAND SWITCH on Radio Transmitter BC–610–E and the antenna band switch on Antenna Tuning Unit BC–939–A). Apply only a thin film of special lubricating preservation oil (PS). Do not permit excess oil to run down onto wires or other parts.

77. Coils

a. INSPECT (I). Inspect all coils for dirt, poor connections, and damaged insulation. The coil forms supporting the transmitter coils should be inspected for cracks in the insulation and loose joints in the insulation supporting the coil windings. Examine the pins of the plug-in coils for damaged or defective pins. See that the pins maintain the necessary spring action to insure good contact in the pin sockets.

b. TIGHTEN (T). Tighten all loose connections on coils, after first making certain that the connection is free of dirt or corrosion. Recement loose joints in the insulation supporting the coil windings. Tighten the nuts supporting the pins in plug-in coils, if the pins are found to be loose. Do not exert excessive pressure while tightening these nuts; excessive pressure will crack the supporting insulator.

c. CLEAN (C). Clean the coil form and coil with a soft brush. Remember that the ceramic coil form is actually performing the function of a high-voltage insulator, hence the same preventive maintenance applies to the coil form as to high-voltage insulators and bushings.

78. Rheostats and Potentiometers

a. INSPECT (I). Inspect all rheostats and potentiometers for cleanliness and mechanical action. Potentiometers which are protected with dust covers should be inspected externally only. Do not remove the dust covers. Look for loose connections and loose mounting nuts. Examine the sliding arm of exposed rheostats and potentiometers for firm contact with the resistance element. Look for corrosion on the contact of the sliding arm.

b. TIGHTEN (T). Tighten any loose connections or mounting nuts.

c. CLEAN (C). Use a soft brush to clean dust and dirt from the exposed resistance elements and sliding arms. Use crocus cloth to remove corrosion from the contact surface of exposed, wire-wound resistance elements, and from the contact surface of the sliding arm of exposed rheostats and potentiometers.

d. ADJUST (A). If inspection reveals that the sliding arm is not making adequate contact with the resistance element, increase the spring tension. Any adjustment to the spring tension should be made with extreme caution to avoid damaging the control.

79. Terminal Blocks

a. INSPECT (I). Inspect the terminal blocks for cracks, breakage, dirt, and loose connections or mounting screws.

b. TIGHTEN (T). Tighten loose screws, lugs, and mounting bolts. When tightening screws, be sure to select a screw driver of correct size. Do not exert too much pressure.

c. CLEAN (C). Remove all dust and dirt from the terminal blocks with a small brush. Remove corrosion from connections with #0000 sandpaper.

80. Multiple Connectors

a. INSPECT (I). Inspect the exterior of all multiple connectors, male and female, for dust, dirt, corrosion, or damaged pins. Look for traces of moisture on the insulated portion of the connector. Inspect the interior of the connectors for loose connections and broken strands of wire to the various pins. Loose strands should be soldered in place. If the insulation on each wire connected to the pins does not extend entirely to the pin, wrap the bare wire with friction tape to prevent short circuits.

b. CLEAN (C). Remove all dust and dirt from the exterior and interior of the connectors. Wipe the moisture out with a clean dry cloth. In tropical areas, the insulated portion of the connector

will mold rapidly if moisture is not removed at frequent intervals. Light mold may be removed by wiping with a clean dry cloth. If mold is excessive, use a cloth dampened with dry-cleaning solvent. Use #0000 sandpaper for removing corrosion from metal parts of the connector.

81. Cords and Cables

a. INSPECT (I). Inspect the cables for cracked or deteriorated insulation, frayed or cut insulation at the connecting and supporting points, and improper placement which puts the cables or connections under strain. Watch for kinks which will damage the wires within the cable. Examine for oil or grease on the rubber insulation. Oil or grease causes rapid deterioration of rubber.

b. TIGHTEN (T). Tighten loose cable clamps, coupling rings, and cable connections.

c. CLEAN (C). Remove all dust, dirt, oil, grease, and foreign matter from all cables and cords. Dirt often hides defects in the cable insulation. These hidden defects may result in equipment failure.

82. Meters

a. INSPECT (I). Inspect the connections for loose, dirty, or corroded connections. Look for cracked meter glass. Inspect for loose meter mounting screws.

b. TIGHTEN (T). Tighten all loose connections to the meter. Make certain that connections are clean before they are tightened. Tighten the meter mounting screws if necessary.

c. CLEAN (C). Clean the entire exterior of the meter with a clean dry cloth. Clean corrodded connections with #0000 sandpaper.

d. ADJUST (A). Meters normally register zero when the equipment is turned off. Occasionally a meter will become out of adjustment and require adjustment. Before adjusting, however, a test should be made to determine whether the meter has acquired a charge of static electricity as a result of cleaning the meter glass with a dry cloth. Such a static charge will cause a meter movement to register above (or below) zero reading with the equipment shut off. To test the meter for static charge, dampen the fingers of one hand and place the little finger firmly on a screw head or other metal part of the component to place the body at a chassis ground potential. Brush the dampened thumb slowly across the face of the meter glass. The static charge should drain off, releasing the meter movement so that the meter will register zero. In some cases this discharge is not effected, but the meter needle deflection will vary during the time that the thumb is brushed over the glass if a static charge is present. In this case, allow the meter to remain idle for 5 minutes to allow a natural drain. If the meter movement is not affected in any way by the above test, no static charge is present. To adjust the movement, use a small thin-blade screw driver in the adjustment screw in the lower edge of the meter face. Rotate the screw to the right or left as required to bring the needle to zero.

83. Pilot Lamps

a. INSPECT (I). Inspect the pilot lamp assembly for loose lamps, loose mounting screws, and loose, dirty, or corroded connections. If a pilot lamp is found with a loose glass envelope, replace the lamp.

b. TIGHTEN (T). Tighten loose mounting screws and resolder loose connections. If the connections are dirty or corroded, clean before soldering. Tighten loose lamps in their sockets.

84. Jacks

a. INSPECT (I). Although jacks require very little attention, inspect them periodically for cleanliness and tightness. Insert the proper plug in the jack and note the action of the jack. Contact to the plug should be secure.

b. TIGHTEN (T). Tighten the mounting nut or screws on all jacks, if they are found to be loose.

c. CLEAN (C). Clean the jacks thoroughly with a stiff brush. If the contacts on the jacks are corroded, clean them with crocus cloth.

d. ADJUST (A). Adjust the spring contact of the jacks *only* if inspection shows that the jacks are not making firm contact with the plugs. Bend the spring contact with a pair of long-nose pliers. Check the action of the jack with a plug after each adjustment.

85. Dynamotors and Motors

a. INSPECT (I). Inspect for dust and dirt around the commutator and brushes. Inspect the brushes for wear and signs of arcing. Check the tension of the brush springs. Look for poor connections at the brushes as well as at the plug.

b. FEEL (F). Feel the bearings as soon as possible after shut-down of the equipment, to determine whether the bearings are running hot. Become accustomed to the amount of heat to expect at the bearings under normal conditions.

c. TIGHTEN (T). Tighten the mounting bolts securing the dynamotor or motor. Tighten any loose connections at the brushes or plugs.

d. CLEAN (C). Use a dry clean cloth to remove dust and dirt from the exterior of all dynamotors and motors. If heavy dirt deposits are not readily removed, use dry-cleaning solvent on a clean cloth. Use an air stream from an air compressor to blow the dust out of the interior of motors if dry compressed air is available. Use a soft brush to remove the dust if dry compressed air is not available.

e. LUBRICATE (L). Lubricate the ventilating fan air-control plate screw sparingly with oil. Lubricate the ventilating fan motor bearings and the heater fan motor bearings with oil as follows:

(1) *Temperatures above +32° F.* Use engine oil SAE 30 (OE 30).

(2) *Temperatures from +32° F., to 0° F.* Use engine oil SAE 10 (OE 10).

(3) *Temperatures below 0° F.* Use special preservative lubricating oil (PS).

86. Cabinets, Chassis, and Mountings

a. INSPECT (I). Inspect all cabinets and chests for cleanliness. Examine all chassis and mountings for loose screws, dirt, and corrosion or rust. Check all panels for loose knobs.

b. TIGHTEN (T). Tighten all loose mounting screws, loose chassis screws and bolts, and all loose knobs or handles. Tighten all wingnuts and turnbuckles which secure the various components to their mountings or the mountings to the shelter.

c. CLEAN (C). Wipe all dust and dirt from the exterior and interior of the cabinets and chests. Brush out the dust and dirt from the chassis and mountings. Use dry-cleaning solvent on a clean cloth to remove stubborn accumulations of dirt. Use #0000 sandpaper to remove corrosion and rust. Cover all bare spots on metal surfaces with touch-up paint.

d. LUBRICATE (L). Lubricate the hinges on chests, the threads on turnbuckles, and the threads on wingnuts with a light oil (special preservative lubricating oil (PS)).

87. Headsets, Microphones, Keys, and Loudspeakers

a. INSPECT (I). Inspect all external surfaces for dirt and corrosion. See that all cord connections are tight and that plugs and jacks fit together properly. Inspect the key for proper operation.

b. CLEAN (C). Wipe the dust and dirt from all external surfaces with a clean dry cloth. Use crocus cloth for removing corrosion from the connecting plugs.

c. LUBRICATE (L). Lubricate all key bearings with light oil (special preservative lubricating oil (PS)), if needed.

88. Couplings and Control Shafts

a. INSPECT (I). Inspect couplings and control shafts for tightness and cleanliness. If the setscrews securing the couplings and control shafts are loose, the switches or capacitors connected to the shafts will not rotate through the correct arc, and inaccuracy will result.

b. TIGHTEN (T). Tighten all setscrews securing the couplings and control shafts.

c. LUBRICATE (L). Lubricate bearings of capacitor shafts (front and rear) and tuning-control shaft bearings with 1 or 2 drops of oil. For temperatures above 0° F., use engine oil SAE 10 (OE 10). For temperatures below 0° F., use special preservative lubricating oil (PS). Lubricate the following points on Antenna Tuning Unit BC–939–A with special lubricating grease (GL):

(1) Antenna high-frequency loading coil contact roller shaft.

(2) Antenna coupling adjustment coil contact roller shaft.

(3) Antenna coupling adjustment control bevel pinions.

(4) Antenna high-frequency tuning control bevel pinions.

(5) Antenna low-frequency tuning control bevel pinions.

89. Gears

a. INSPECT (I). Inspect the teeth of the gears on the tuning-capacitor drive mechanism for cleanliness and freedom of operation.

b. CLEAN (C). Remove all dust and dirt with a small brush. If dirt accumulation is great, use a brush dipped in dry-cleaning solvent.

90. Antennas

a. INSPECT (I). Inspect antenna mast sec-

tions for cleanliness and tightness of joints. Examine antenna insulators for cracks, chips, and dirt. Examine antenna lead-in wires for poor connection, kinks, frayed insulation, and dirty connections.

b. TIGHTEN (T). Tighten all mounting bolts supporting the antenna mounting bracket. Tighten loose antenna mast sections.

c. CLEAN (C). Wipe all dust and dirt from the antenna mast sections and insulators with a clean dry cloth. If dirt accumulations are difficult to remove, use dry-cleaning solvent on the cloth. If dry-cleaning solvent is used as a cleaning agent, wipe the antenna insulators with a clean dry cloth. Use #0000 sandpaper to remove corrosion from antenna connections. Use #0000 sandpaper to remove corrosion or rust spots on the antenna mast sections. Cover any bare metal spots with touch-up paint.

91. Reels

a. INSPECT (I). Inspect reels for dirt, rust, and corrosion. Check to see that the reel operates freely.

b. CLEAN (C). Remove all dirt from reels with a stiff brush. If rust or corrosion is present, use #0000 sandpaper to remove these spots. Repaint, if necessary, with touch-up paint.

c. LUBRICATE (L). Lubricate the bearings of the fixed handle of reel hand Axle RL–27, by applying lubricant liberally at the opening between the shaft and the inner end of the handle. To lubricate the handle bearings and lock, remove the handle, clean the lock and flush out the bearings, then relubricate. Clean dirt from the handle shaft before replacing the handle. The correct lubricants to use are:

(1) *Temperatures above +32° F.* Use engine oil SAE 30 (OE 30).

(2) *Temperatures from +32° F., to 0° F.* Use engine oil SAE 10 (OE 10).

(3) *Temperatures below 0° F.* Use special preservative lubricating oil (PS).

Section II. ITEMIZED PREVENTIVE MAINTENANCE

92. General

For ease and efficiency of performance, it is suggested that preventive maintenance on Radio Sets SCR–399–A and SCR–499–A be broken down into operations that can be performed at different time intervals. In this section the preventive maintenance work to be performed on the radio set at specified time intervals is broken down into units of work called items. The general techniques involved and the application of the FITCAL operations in performing preventive maintenance on individual parts are discussed in section I. These general instructions are not repeated in this section. When performing preventive maintenance, see section I if more information is required for the following items. All work is to be performed with the power removed from the equipment. After preventive maintenance has been performed, the equipment should be put into operation and checked for satisfactory performance. (See check list, par. 66.)

93. Common Materials Needed

The following materials will be needed in performing preventive maintenance:

Common hand tools (TE–41 or equivalent)
Clean cloth
#0000 sandpaper
Crocus cloth
Fine file or relay burnishing tool
Dry-cleaning solvent (SD)
Small soft brush
Small stiff brush
Small inspection mirror

Note. Leaded gasoline will not be recommended as a cleaning fluid for any purpose. Dry-cleaning solvent (SD), a cleaning fluid, is available through established supply channels. Oil, Fuel, Diesel, U. S. Army Specification 2–102B, may be used for cleaning purposes when dry-cleaning solvent is not at hand. Since unleaded gasoline is available only in limited quantities, and only in certain locations, it should be used for cleaning purposes only when no other agent is suitable. Carbon tetrachloride, or fire-extinguishing liquid (carbon tetrachloride base), may be used if necessary, *but only on contact parts of electronic equipment.*

94. Item 1. Exterior of Radio Sets SCR–399–A and SCR–499–A

OPERATIONS

I T C L	Cabinets and mountings
I T C	Control knobs
I T	Pilot lamps

REMARKS: Maintenance operations in item 1 do not require the removal of the chassis from their cabinets. Pilot lamp connections inside the cabinets will be handled with items 7 and 9.

95. Item 2. Headsets, Microphones, Keys, and Loudspeakers

OPERATIONS

I C	Headsets
I C	Microphones
I C L	Keys
I C	Loudspeakers

REMARKS: Check connecting cords for breaks under the insulation. Adjust keys after performing preventive maintenance.

96. Item 3. Cords, Cables, and Connectors

OPERATIONS

I T C	Cords and cables
I T C	Multiple connectors

REMARKS: Perform operations on external surfaces only for multiple connectors. Internal operations will be handled with items 6, 9, and 10.

97. Item 4. Antennas

OPERATIONS

I T C	Antenna mast sections
I C	Antenna insulator
I T C	Mounting bracket
I T C	Antenna lead-in

REMARKS: When equipment is used in vehicles, check the tie-down ropes and insulators for security.

98. Item 5. Accessories

OPERATIONS

I C L	Reels
I C	Shelter HO-17-A
I T C L	Chests

REMARKS: Keep all cords and cables off the floor. The shelter must be kept clean and orderly. Keep instruction books in their proper compartment when not in use.

99. Item 6. Interior of Radio Sets SCR-399-A and SCR-499-A

OPERATIONS

I T C	Chassis of each main component
I T L	Couplings and control shafts
I C	Gears
I T C	Multiple connectors

REMARKS: Disassemble multiple connectors and check for poor connections, frayed insulation, and broken strands of wire. Do not attempt to remove individual pins within the connector.

100. Item 7. Radio Transmitter BC-610-E

OPERATIONS

I T C A	Vacuum tubes
I T C	Capacitors
I T C	Resistors
I T C A	Fuses
I T C	Bushings and insulators
I T C A	Relays
I C L	Switches
I T C	Coils
I T C A	Rheostats and potentiometers
I T C	Terminal blocks
I T C A	Meters
I T	Pilot lamps

REMARKS: Test the transmitter after performing preventive maintenance to be sure that all circuits are correct.

101. Item 8. Antenna Tuning Unit BC-939-A

OPERATIONS

I T C	Capacitors
I T C	Coils
I T C	Bushings and insulators
I C L	Switches
I C	Gears
I T L	Couplings and control shafts

REMARKS: Test for performance after completing preventive maintenance.

102. Item 9. Speech Amplifier BC-614-E

OPERATIONS

I T C A	Vacuum tubes
I T C	Capacitors
I T C	Resistors
I T C	Bushings and insulators
I T C A	Potentiometers
I T C	Terminal blocks
I T C A	Meter
I T	Pilot lamp
I T C A	Jacks
I T C	Multiple connectors

103. Item 10. Junction Box JB-70-A

OPERATIONS

I T C	Capacitors
I T C	Resistors
I T C	Terminal blocks
I T C A	Jacks
I C L	Switches
I T C	Multiple connectors

REMARKS: Use great care when handling the junction box when the chassis is out of its cabinet. The socket insulators break easily if the chassis is not handled properly.

104. Item 11. Rectifier RA-63-(*)

OPERATIONS

I T C A	Relay
I T C	Terminal block
I C L	Switch

REMARKS: Wipe dust, dirt, and moisture from the rectifier unit with a clean dry cloth. Tighten the mounting screws.

105. Item 12. Heating and Ventilating System

OPERATIONS

F I T C L	Motors
I C	Switches

REMARKS: Examine the heating element for loose or corroded connections. Clean dust from the heating coil with a soft brush. Do not allow any inflammable material to come in contact with the heating coil.

106. Item 13. Auxiliary Batteries

OPERATIONS

I C	Storage batteries
I C T	Battery connections

REMARKS: Test the specific gravity of the storage batteries in accordance with TM 11-430.

107. Preventive Maintenance Check List

a. GENERAL. The following check list is a summary of the preventive maintenance to be performed on Radio Sets SCR-399-A and SCR-499-A. Some items require preventive maintenance more frequently than others. For this reason the check list divides the preventive maintenance items into daily, weekly, and monthly tasks. This recommended frequency of operation may be varied at the discretion of the commanding officer. Similarly, the check list indicates the echelon most fitted to perform the various tasks. The echelon performing any given item may be changed at the discretion of the commanding officer.

b. CHECK LIST

Item No.	Operations	Item	When performed: Before operation	After operation	Daily	Weekly	Monthly	Echelon
1	I T C L	Exterior of Radio Sets SCR-399-A and SCR-499-A		X	X			1st
2	I C L	Headsets, microphones, keys, and loudspeakers		X	X			1st
3	I T C	Cords, cables, and connectors	X		X			1st
4	I T C	Antennas	X		X			1st
5	I T C L	Accessories		X		X		1st
6	I T C L	Interior of Radio Sets SCR-399-A and SCR-499-A				X		2d
7	I T C A L	Radio Transmitter BC-610-E				X		2d
8	I T C L	Antenna Tuning Unit BC-939-A				X		2d
9	I T C A	Speech Amplifier BC-614-E				X		2d
10	I T C A L	Junction Box JB-70-A				X		2d
11	I T C A L	Rectifier RA-63-(*)					X	2d
12	F I T C L	Heating and ventilating system					X	2d
13	I T C	Auxiliary batteries		X	X			1st

F	I	T	C	A	L
Feel	Inspect	Tighten	Clean	Adjust	Lubricate

Section III. LUBRICATION

Note. Lubrication orders are not required for Radio Sets SCR-399-A and SCR-499-A. All lubrication instructions on the equipment are included in section I.

Section IV. SPECIAL TOOLS

108. Relay and Commutator Tools

A number of items in preventive maintenance require work of a special and somewhat delicate nature. These include cleaning silver-plated relay contacts, removing pitted surfaces from contacts, polishing and dressing commutators and slip-rings, and dressing motor and generator brushes. To do the work properly, special supplies and a few specially constructed tools are needed. Most of the required materials are furnished with the radio set, but a few must be improvised.

109. Construction of Special Relay and Commutator Tools

Crocus-cloth, canvas, and sandpaper sticks are constructed in the following manner:

a. Obtain one length of wood (or suitable substitute) 1/32 inch thick, ⅜ inch wide, and 3¾ inches long; and three lengths of wood (or suitable substitute) ¼ inch thick, 1 inch wide, and 8 inches long. Cut two pieces of crocus cloth, one piece 1 inch wide and 2½ inches long, and the other 1 inch wide and 5¼ inches long. Cut one piece of #0000 sandpaper and one piece of canvas, each 1 inch wide and 5¼ inches long.

b. Cement the small piece of crocus cloth to the small stick, as shown in figure 31 (A). Note that both sides of the stick are covered. Place the stick in the vise until the cement hardens. The pieces of crocus cloth which extend over the edge of the stick may be cut off with a knife. The finished product is shown in figure 31 (A).

c. The long, narrow pieces of crocus cloth, sandpaper, and canvas are cemented to the three long sticks, as shown in figure 31 (B). Note that in this case, the fold is over one end of the stick rather than over the side. Again the vise should be used to hold the cover material flat on the stick until the cement has hardened. This finished product is shown in figure 31 (B).

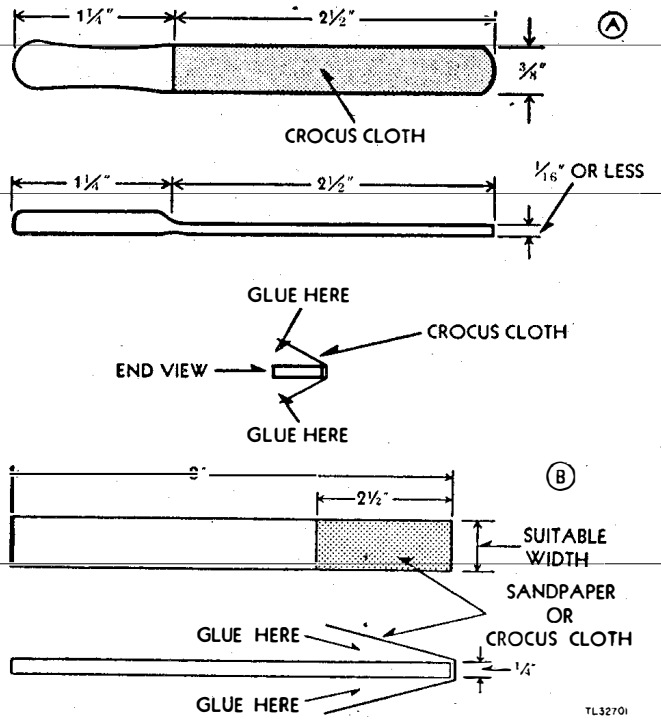

Figure 31. Relay and commutator tools, method of construction.

110. Safety Shorting Stick and Jumper Wires

It will be necessary for the maintenance personnel to construct a safety shorting stick and several jumper wires. The suggested method of construction is as follows:

a. Secure a dry piece of wood or some other material which is a good electrical insulator. It should be about 15 inches long and about 1 inch square. The latter dimension is not very important. Securely fasten a piece of copper or brass rod (or thin tubing) to one end of the stick in such a manner that the rod extends 12 inches beyond the end of the stick. The free end of the rod should be bent in the form of a small hook. Solder a piece of heavy flexible hook-up wire about 18 inches long to the metal rod at the point where it is fastened to the stick. Attach a heavy clip to the free end of the wire.

b. The jumper wires are made from heavy flexible wire, about 18 inches long, with heavy clips attached to each end. These are intended for use as shorting links across high-voltage capacitors in components that are being repaired or cleaned.

Section V. MOISTUREPROOFING AND FUNGIPROOFING

111. General

The operation of Signal Corps equipment in tropical areas where temperature and relative humidity are extremely high requires special attention. The following items represent problems which may be encountered in operation:

a. Resistors, capacitors, coils, chokes, transformer windings, etc., fail.

b. Electrolytic action takes place in resistors, coils, chokes, transformer windings, etc., causing eventual break-down.

c. Hook-up wire and cable insulation breakdown. Fungus growth accelerates deterioration.

d. Moisture forms electrical leakage paths on terminal boards and insulating strips, causing flash-overs and crosstalk.

e. Moisture provides leakage paths between battery terminals.

112. Treatment

A moistureproofing and fungiproofing treatment has been devised which if properly applied provides a reasonable degree of protection against fungus growth, insects, corrosion, salt spray, and moisture. The treatment involves the use of a moisture- and fungi-resistant varnish applied with a spray gun or brush. See TB SIG 13, Moistureproofing and Fungiproofing Signal Corps Equipment, for a detailed description of the varnish-spray method of moistureproofing and fungiproofing and the supplies and equipment required in this treatment.

Caution: Varnish spray may have toxic effects if inhaled. To avoid inhaling spray, use respirator if available; otherwise, fasten cheesecloth or other cloth material over nose and mouth.

113. Step-by-Step Instructions for Treating Radio Transmitter BC–610–E

a. PREPARATION. Make all repairs and adjustments necessary for the proper operation of the equipment.

b. DISASSEMBLY. (1) Remove seven screws holding cover plate to back of the set; remove plate.

(2) Tilt the set forward, or place it on its face. Be careful not to rest it on any of the projecting dials or knobs on the front panel.

(3) Remove resistor R_{19} from its socket. This resistor is not to be treated.

(4) Remove Tubes VT–218 from sockets V_3 and V_4. These tubes are not to be treated.

(5) Remove capacitor C_{28} from its contact clips. This capacitor is not to be treated.

(6) Remove antenna coil unit. Antenna coils are not to be treated.

(7) Remove crystals from tuning units. Do not treat crystals.

(8) Clean all dirt, dust, rust, fungus, oil, grease, etc., from the equipment to be processed.

c. MASKING. Cover the following components with masking tape as shown in figures 32, 33, 34, 35, and 36.

(1) Interlock switch SW_5, item A, figure 32.

(2) Contacts on socket SO_6, item B, figure 32.

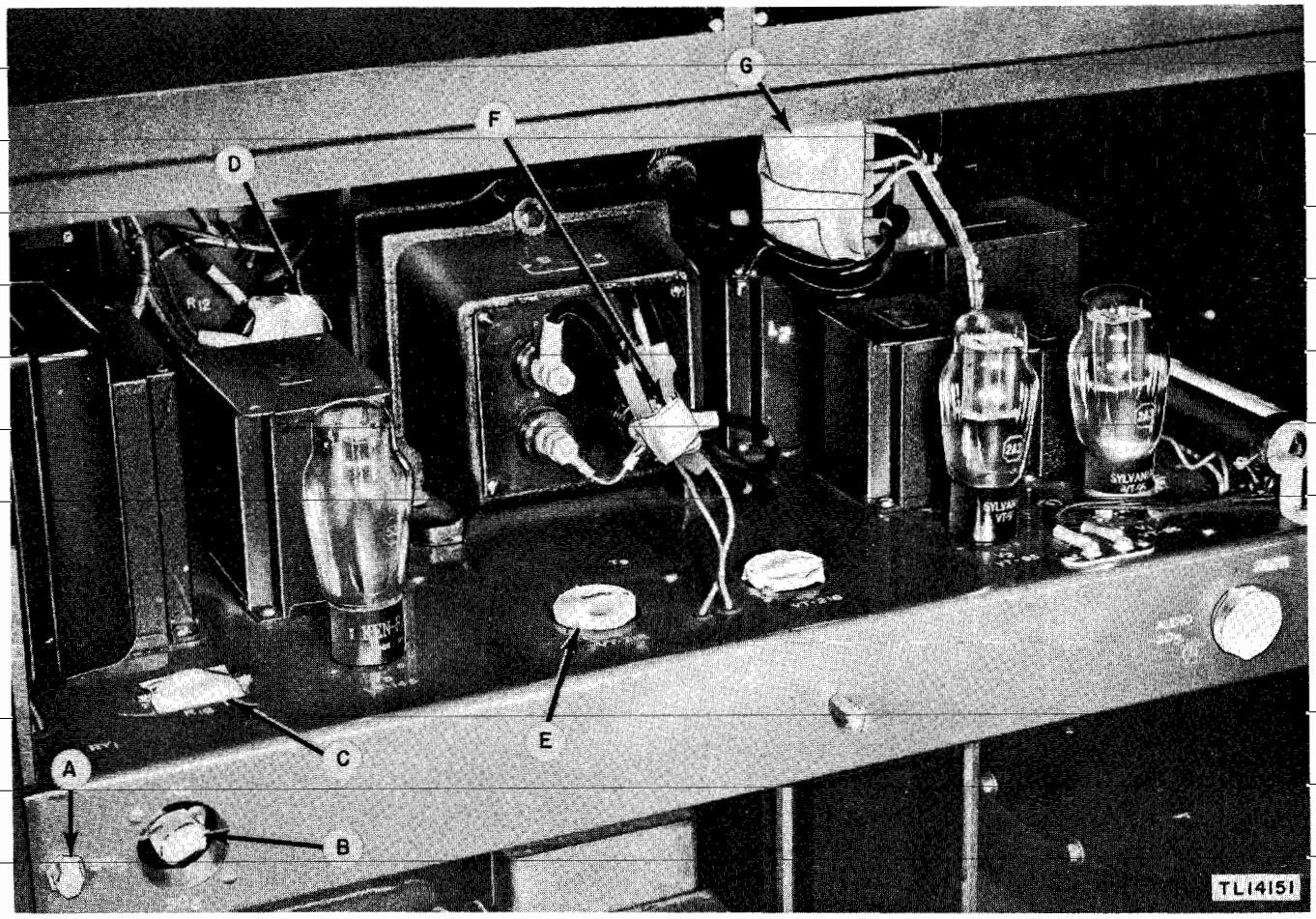

Figure 32. Radio Transmitter BC–610–E—rear interior view of chassis, showing method of masking.

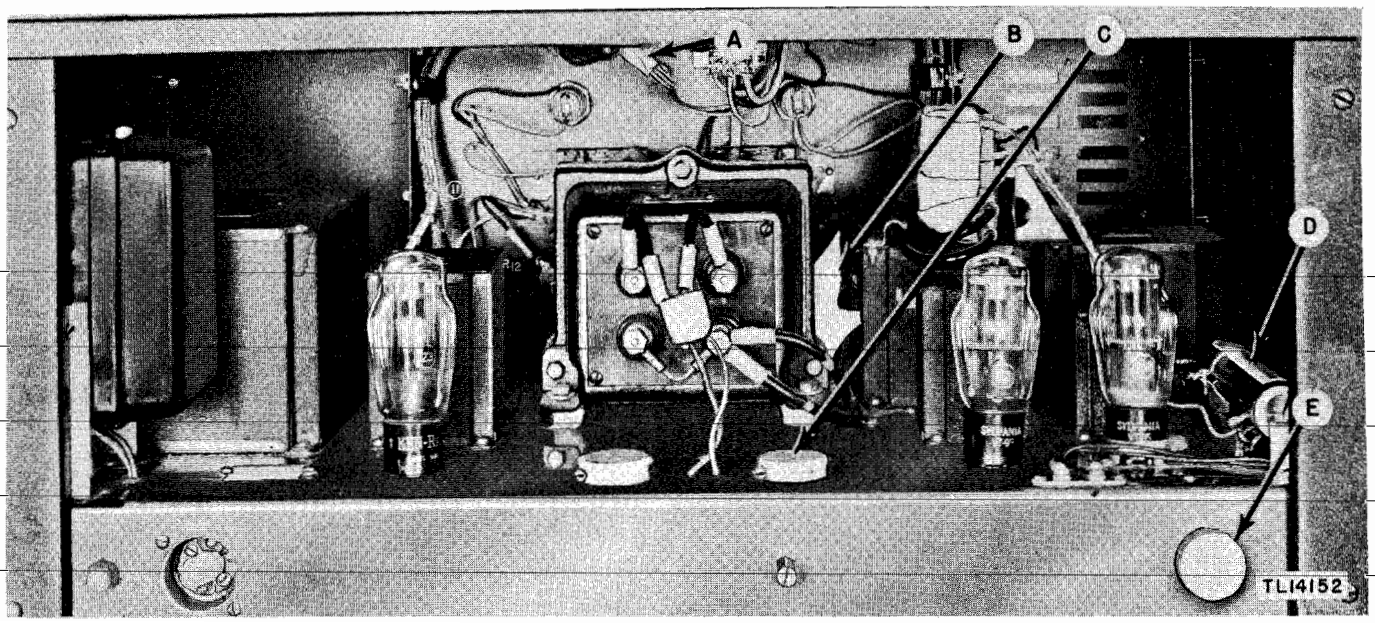

Figure 33. Radio Transmitter BC-610-E—rear interior view of chassis, showing method of masking.

(3) Socket of resistor R_{19}, item C, figure 32.
(4) Variable resistor R_{12}, item D, figure 32.
(5) Tube socket V_4, item E, figure 32.
(6) Contacts on four leads to Tubes VT-218, item F, figure 32.
(7) Relay RY_3, item G, figure 32.
(8) Contacts of push-button switch SW_{12}, item A, figure 33.
(9) Variable resistor R_{18}, item B, figure 33.
(10) Tube socket V_3, item C, figure 33.
(11) Sliding contact area of variable resistor R_{11}, item D, figure 33.
(12) Audio socket SO_5, item E, figure 33.
(13) Wafers of BAND CHANGE switch, item A, figure 34.
(14) EXCITATION METER switch SW_8, item B, figure 34.
(15) Underside of jacks which receive antenna coil, item C, figure 34.
(16) Relay RY_4, item D, figure 34.

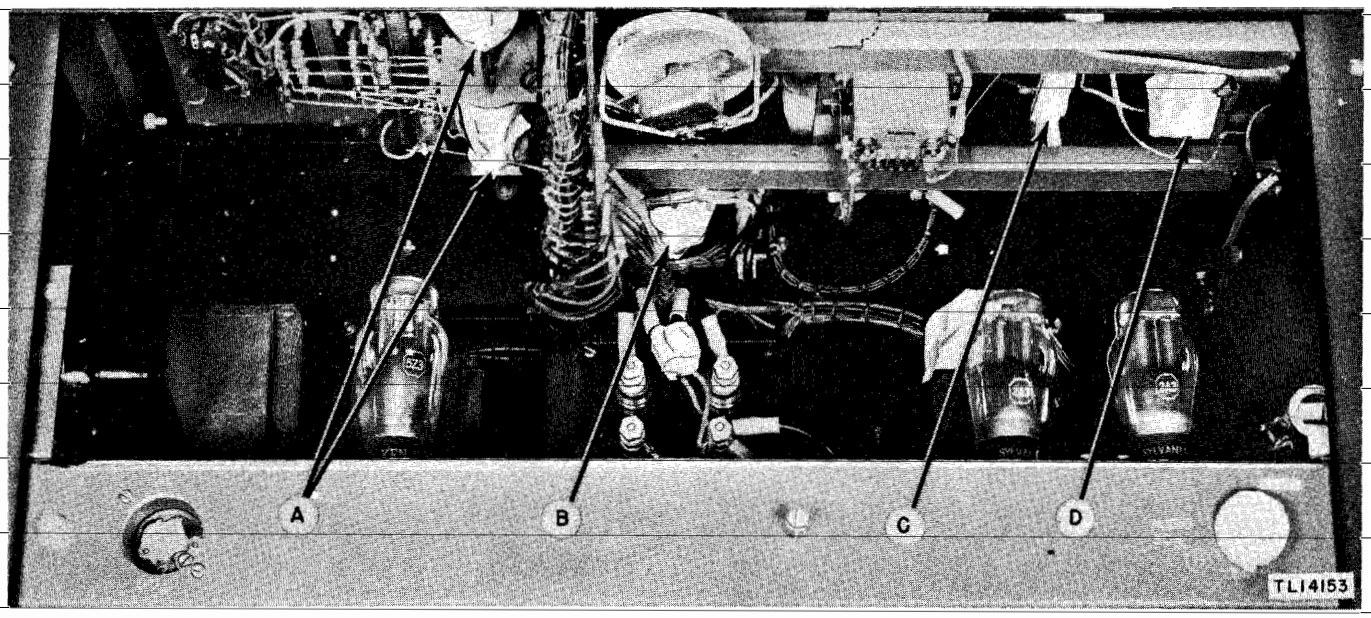

Figure 34. Radio Transmitter BC-610-E—bottom interior view of r-f chassis, showing method of masking.

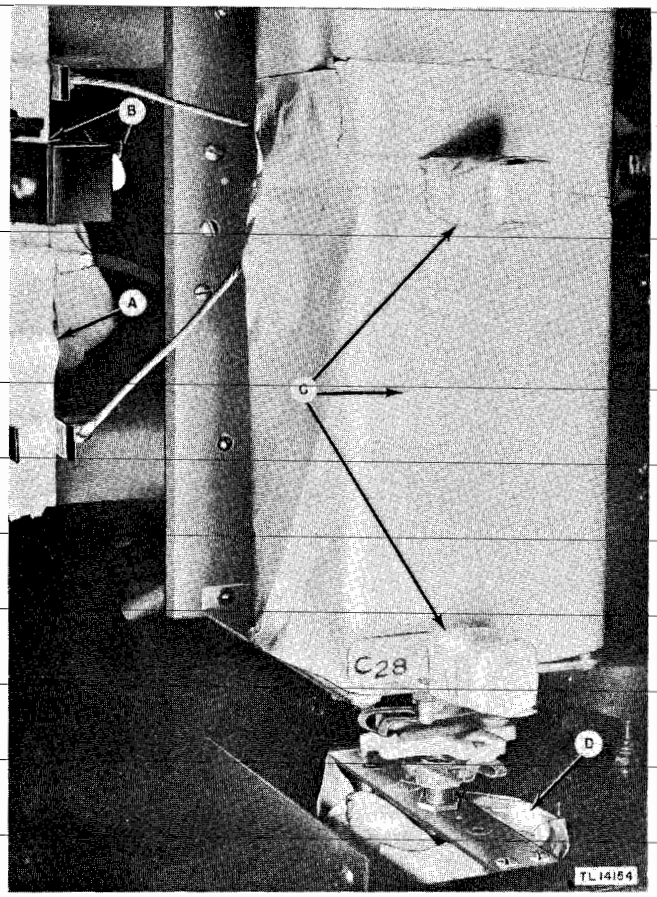

Figure 35. Radio Transmitter BC-610-E—top interior view of r-f chassis, showing method of masking.

(17) Jacks which receive antenna coil, item A, figure 35.

(18) Interlock switch, item B, figure 35.

(19) Plates of variable capacitor C_{12} and clip contacts of capacitor C_{28}, item C, figure 35.

(20) Drive gears of capacitor C_{12}, item D, figure 35.

(21) Interlock switch, item A, figure 36.

(22) Tuning unit crystal sockets, item B, figure 36.

d. DRYING. (1) Place the transmitter in a baking oven, and bake approximately 2 to 3 hours at 160° F.

Caution: Do not exceed 160° F. If wax should begin to melt in any of the components, decrease the temperature and increase the baking time approximately 1 hour for each decrease of 10° F., in temperature.

(2) If a suitable oven for drying is not available, Radio Transmitter BC-610-E may be dried by using a truck as a bake oven, by means of infrared lamps, or in an emergency, by use of a number of electric lamps placed inside the cabinet. It is recommended that treatment be carried out immediately after a long period of operation.

e. VARNISHING. (1) Spray three coats of moistureproofing and fungiproofing varnish (Lacquer, Fungus-resistant, Spec. No. 71-2202 (Stock No. 6G1005.3), or equal) on all components of all three chassis on the transmitter rack, allowing a 15- to 20-minute drying period after each coat.

(2) Using a brush, apply the varnish to those components not reached by the spray. Make sure that all components are adequately protected by varnish.

f. REASSEMBLY. (1) After the varnish is dry, remove the masking tape from all components.

(2) Reassemble by following instructions for disassembly in reverse order.

(3) Test the operation of the transmitter.

g. MARKING. Mark the transmitter with "MFP" and the date of treatment.

Example: MFP—27 September 1944.

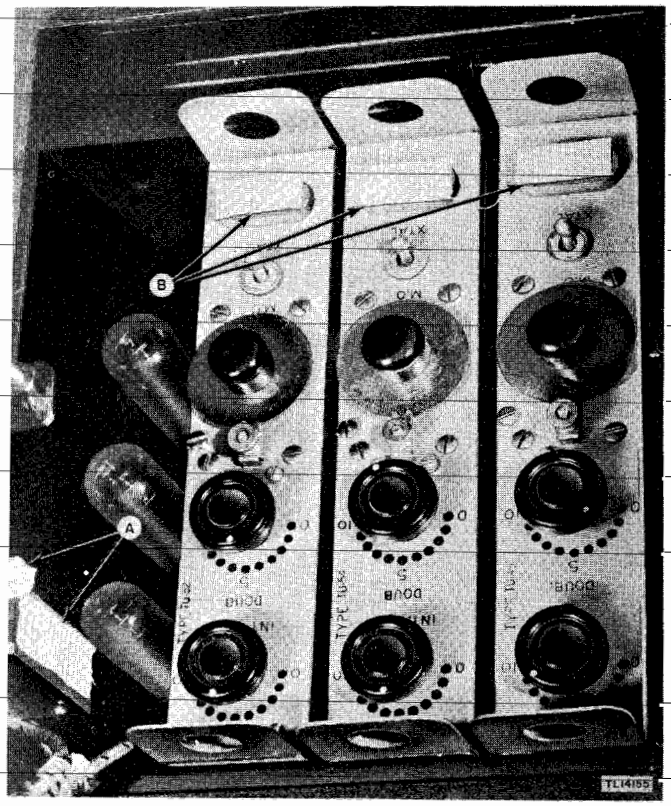

Figure 36. Radio Transmitter BC-610-E—top interior view of exciter stages, showing method of masking.

114. Step-by-Step Instructions for Treating Speech Amplifier BC–614–E

a. PREPARATION. Make all repairs and adjustments necessary for the proper operation of the equipment.

b. DISASSEMBLY. (1) Loosen four fasteners and remove speech amplifier from its case.

(2) Clean all dirt, dust, rust, fungus, oil, grease, etc., from the equipment to be processed.

c. MASKING. Cover the following components with masking tape as shown in figures 37 and 38.

(1) Socket SO_{103} on front panel, item A, figure 37.

(2) Two microphone jacks on front panel, item B, figure 37.

(3) KEY jack on front panel, item C, figure 37.

(4) Socket SO_{102} on front panel, item D, figure 37.

(5) Lamp socket LM_{101}, item A, figure 38.

(6) Key jack J_{101}, item B, figure 38.

(7) Contacts of jacks J_{102} (not shown in illustration. *d.* DRYING. Place the speech amplifier in a baking oven and bake approximately 2 to 3 hours at 160° F.

Caution: Do not exceed 160° F. If wax should begin to melt in any of the components, decrease the temperature and increase the baking time approximately 1 hour for each decrease of 10° F., in temperature.

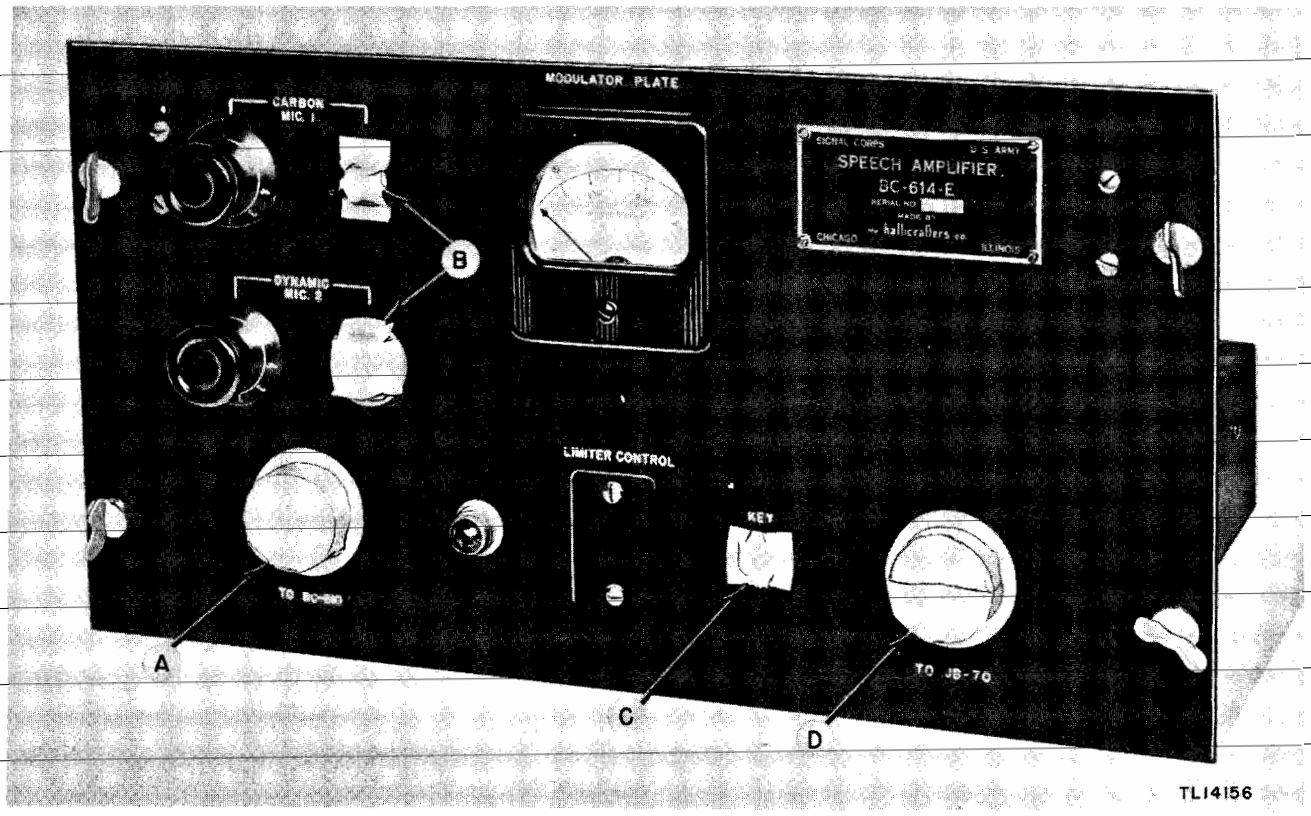

Figure 37. Speech Amplifier BC–614–E—front panel, showing method of masking.

e. VARNISHING. (1) Spray three coats of moistureproofing and fungiproofing varnish (Lacquer, Fungus-resistant, Spec. No. 71–2202 (Stock No. 6G1005.3), or equal) on all components, allowing a 15- to 20-minute drying period after each coat.

(2) Using a brush, apply the varnish to those components not reached by the spray. Make sure that all components are adequately protected by varnish.

f. REASSEMBLY. (1) After the varnish is dry, remove the masking tape from all components.

(2) Reassemble by following the instructions for disassembly in reverse order.

812293 O—49——7

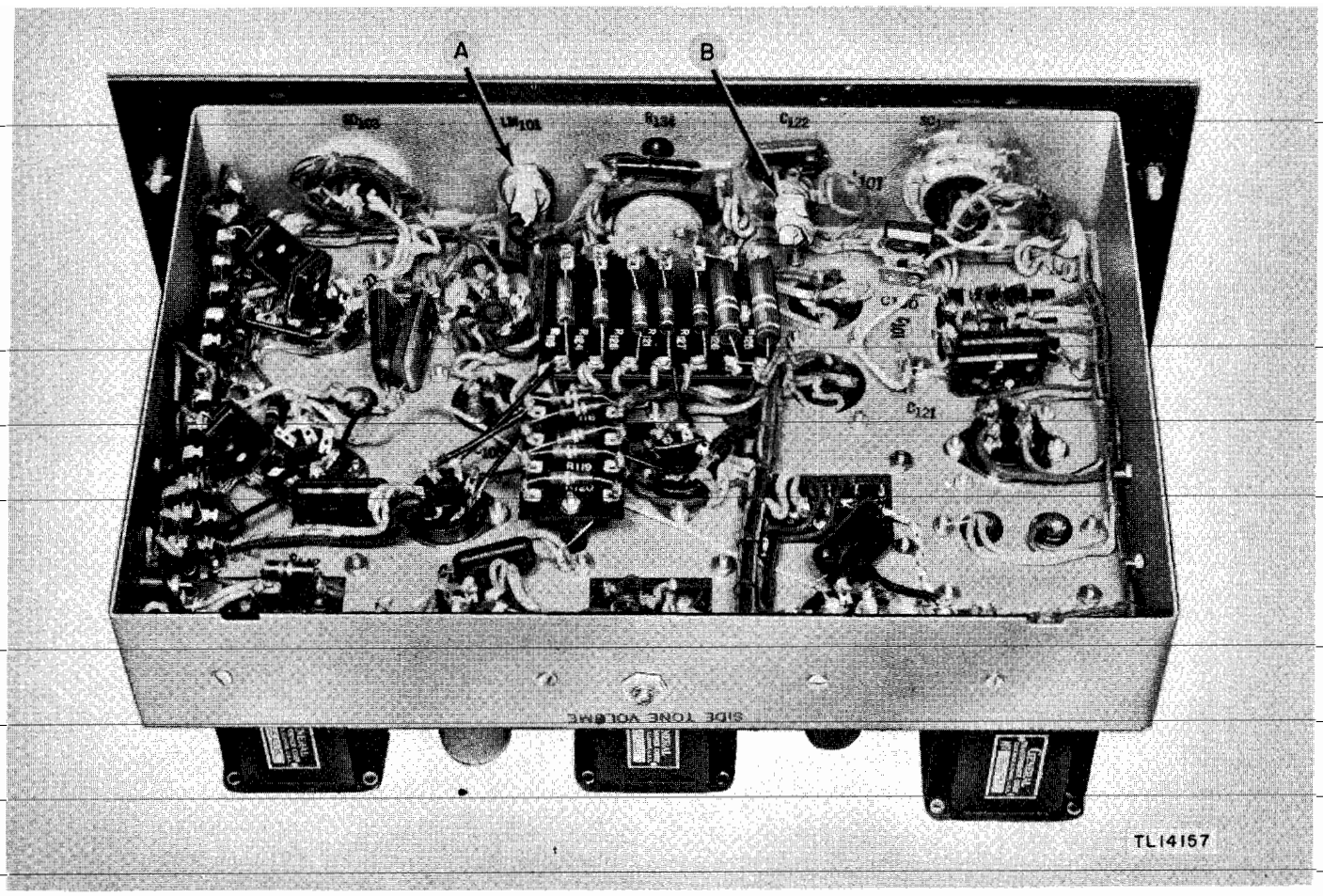

Figure 38. Speech Amplifier BC-614-E—bottom interior view of chassis, showing method of masking.

(3) Test the operations of the speech amplifier.

g. MARKING. Mark the speech amplifier with "MFP" and the date of treatment.

Example: MFP—27 September 1944.

115. Step-by-Step Instructions for Treating Junction Box JB-70-A

a. PREPARATION. Make all repairs and adjustments necessary for the proper operation of the equipment.

b. DISASSEMBLY. (1) Loosen four fasteners and remove junction box from its case. Disconnect the four wires attached to the terminal strip on the inside rear of the junction box.

(2) Clean all dirt, dust, rust, fungus, oil, grease, etc., from the equipment to be processed.

c. MASKING. Cover the following components with masking tape as shown in figures 39 and 40.

(1) Holes in case of receiver output switch SW_{204}, item A, figure 39.

(2) Contacts of wafer switch SW_{205}, item B, figure 39.

(3) Three jacks J_{201}, J_{204}, and J_{205}, item C, figure 39.

(4) Contacts of push-button switch SW_{206}, item D, figure 39.

(5) Contacts of transmitter receiver switch SW_{203}, item E, figure 39.

(6) Three jacks J_{200}, J_{202}, and J_{203}, item F, figure 39.

(7) Holes in case of receiver disabling switch SW_{201}, item G, figure 39.

(8) Contacts of wafer selector switch SW_{202}, item H, figure 39.

(9) Holes in case of receiver disabling switch SW_{200}, item I, figure 39.

(10) Socket SO_{205} on side of chassis, item A, figure 40.

(11) Socket SO_{209} on side of chassis, item B, figure 40.

(12) Six jacks on front panel, item C, figure 40.

(13) Twelve sockets on bottom of chassis, item D, figure 40.

(14) Two terminal posts on front panel, item E, figure 40.

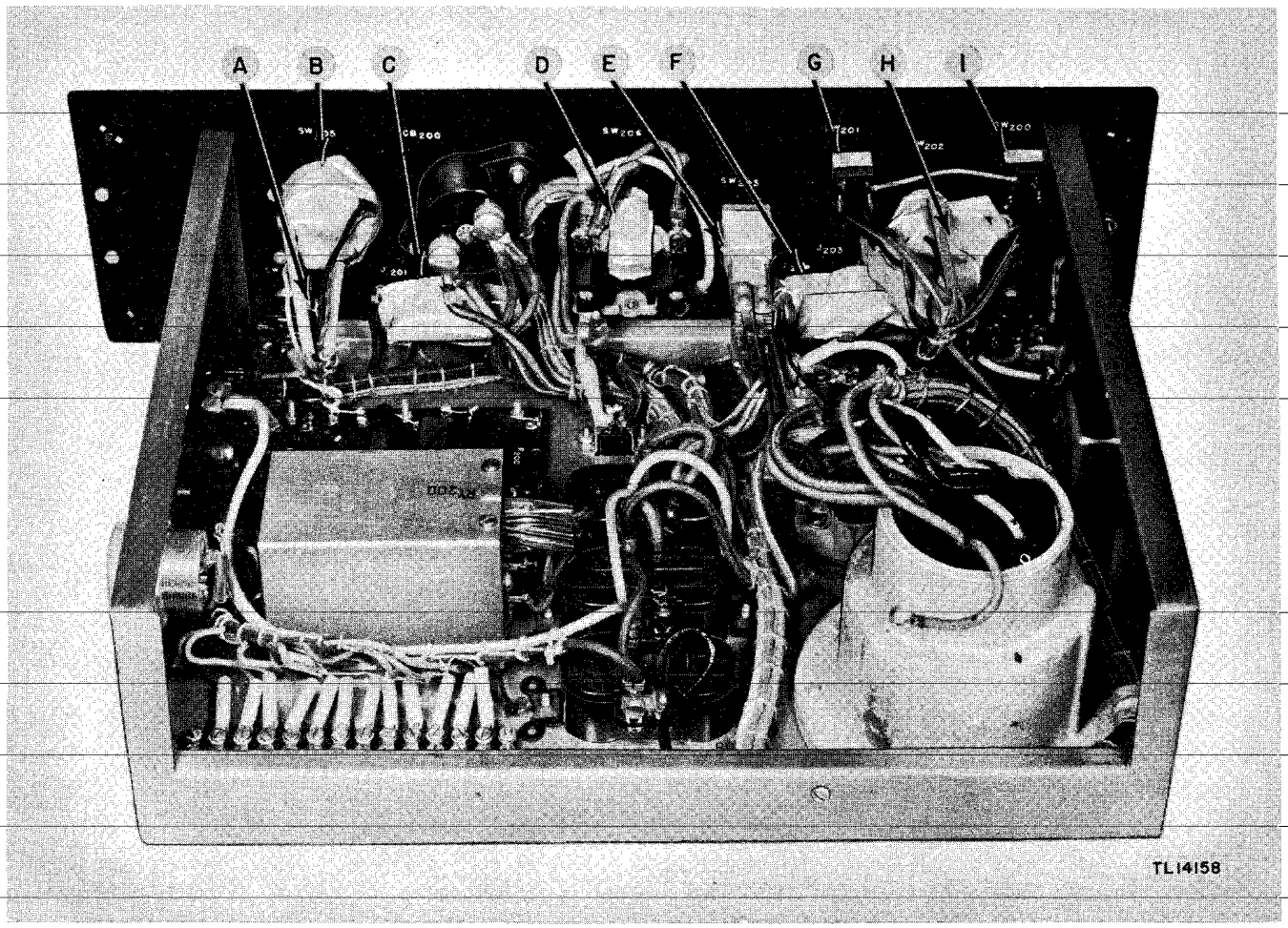

Figure 39. Junction Box JB-70-A—top interior view of chassis, showing method of masking.

d. DRYING. Place the junction box in a baking oven and bake approximately 2 to 3 hours at 160° F.

Caution: Do not exceed 160° F. If wax should begin to melt in any of the components, decrease the temperature and increase the baking time approximately 1 hour for each decrease of 10° F., in temperature.

e. VARNISHING. (1) Spray three coats of moistureproofing and fungiproofing varnish (Lacquer, Fungus-resistant, Spec. No. 71-2202 (Stock No. 6G1005.3), or equal) on all components, allowing a 15- to 20-minute drying period after each coat.

(2) Using a brush, apply the varnish to those components not reached by the spray. Make sure that all components are adequately protected by varnish.

f. REASSEMBLY (1) After the varnish is dry, remove the masking tape from all components.

(2) Reassemble by following the instructions for disassembly in reverse order.

(3) Test the operation of the junction box.

g. MARKING. Mark the junction box with "MFP" and the date of the treatment.

Example: MFP—27 September 1944.

116. Instructions for Treating Radio Receivers BC-312-( ) and BC-342-( )

For instructions for moistureproofing and fungiproofing Radio Receivers BC-312-( ) and BC-342-( ) see C 1, TM 11-850.

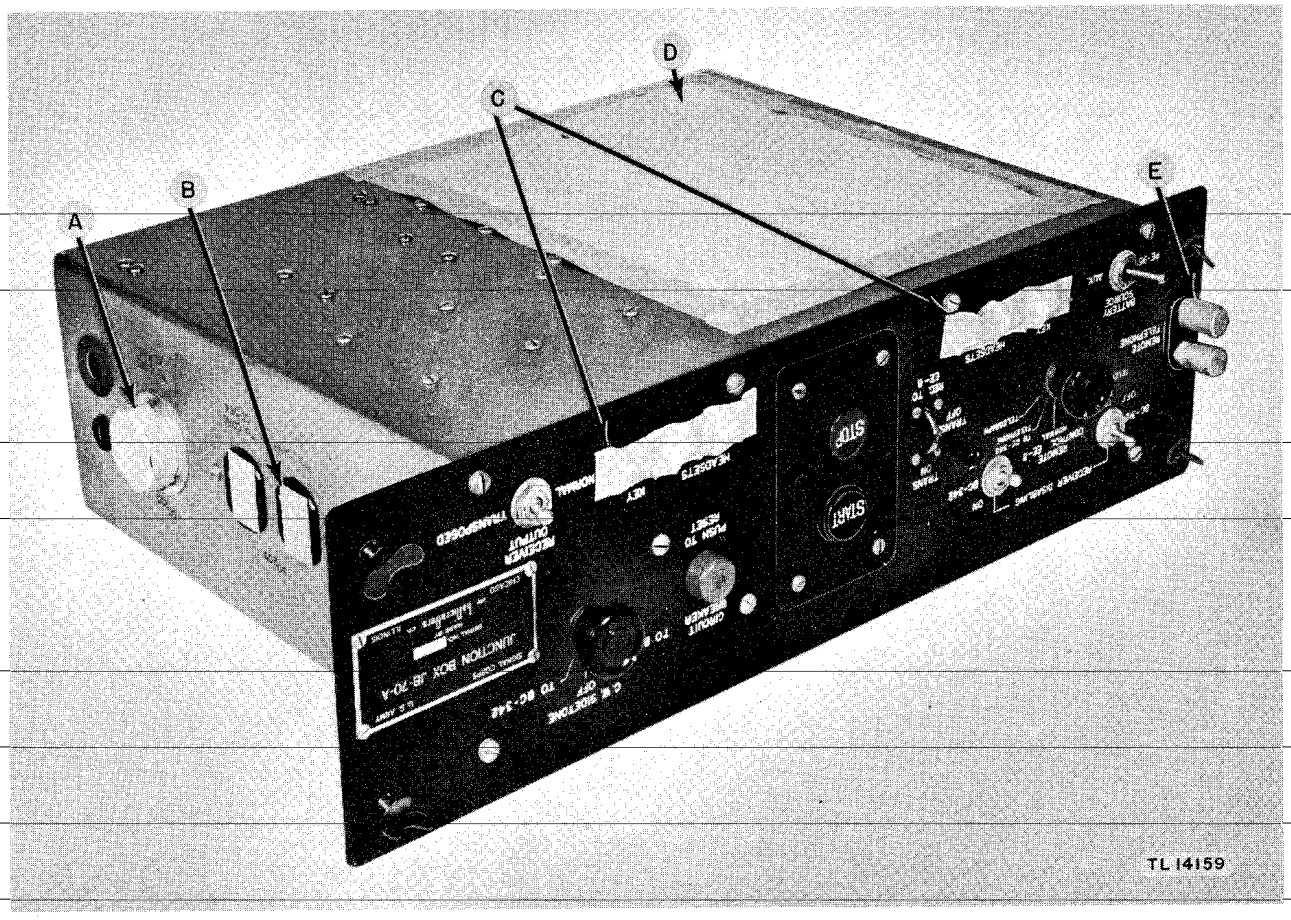

Figure 40. Junction Box JB-70-A—bottom view of chassis and front panel, showing method of masking.

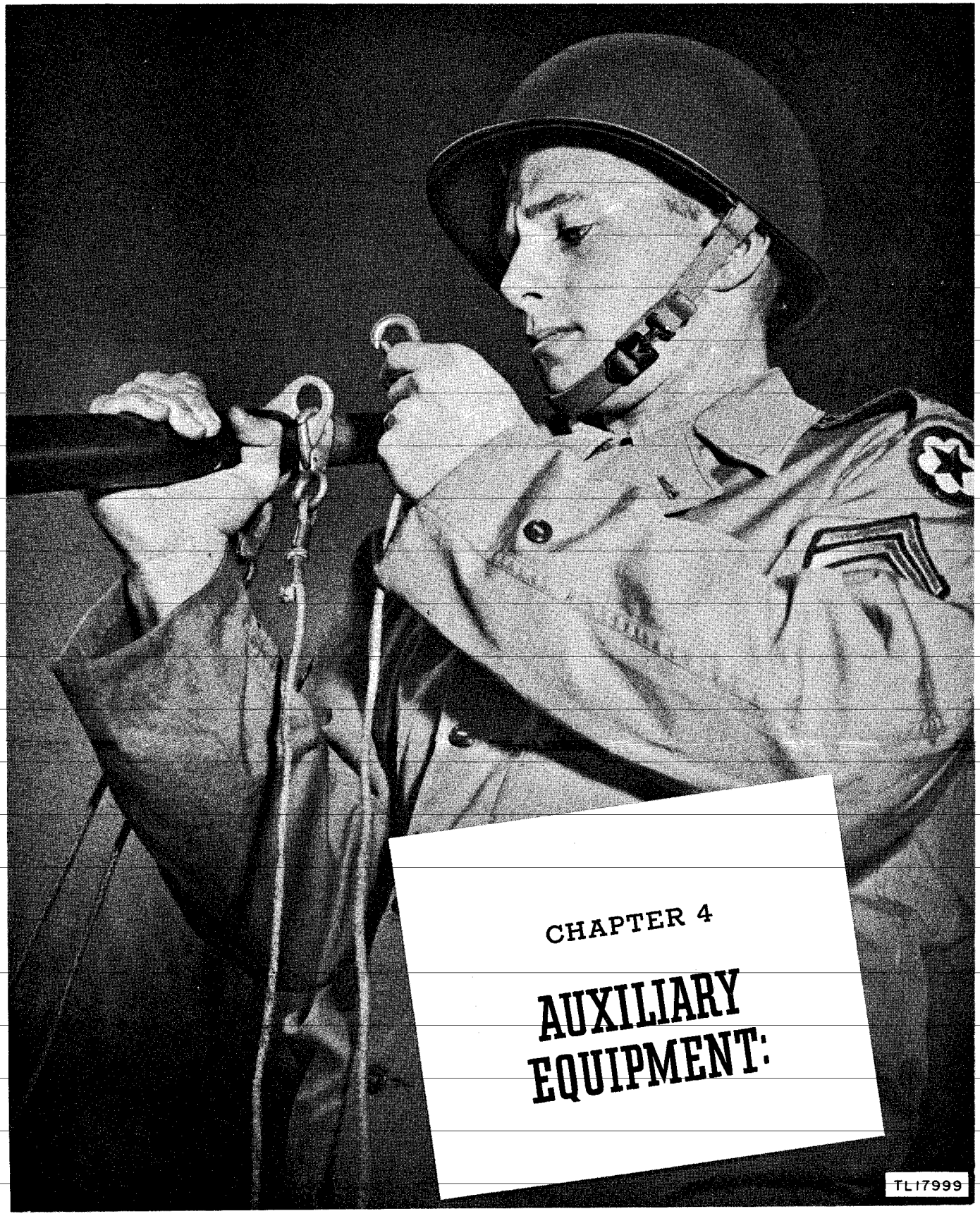

CHAPTER 4

AUXILIARY EQUIPMENT:

CHAPTER 4

AUXILIARY EQUIPMENT

Section I. FREQUENCY CONVERSION KIT MC-509

117. Description

a. Frequency Conversion Kit MC-509 is used to extend the transmitter frequency range of Radio Sets SCR-399-A and SCR-499-A to cover the additional range of 1.0 to 2.0 mc.

b. The component parts of Frequency Conversion Kit MC-509 are:

- 1 Chest CH-251
- 3 Tuning Units TU-61 (range 1.5 to 2.0 mc)
- 3 Tuning Units TU-62 (range 1.0 to 1.5 mc)
- 2 Coil Units C-454 (range 1.5 to 2.0 mc)
- 2 Coil Units C-455 (range 1.0 to 1.5 mc)
- 2 vacuum capacitors, 100-mmf
- 2 vacuum capacitors, 50-mmf
- 1 Antenna AN-168, long wire
- 7 Mast Sections MS-44
- 1 Mast Base MP-19
- 2 Guy Plates MP-20
- 6 Stakes GP-2
- 1 Guy GY-24-A (halyard)
- 4 Guys GY-22-A (2 in use, 2 spares)
- 1 Roll BG-176, antenna
- 1 Bag BG-102-( ) antenna accessories
- 1 Wire W-128, 2-foot
- 1 bag of hardware, including:
  - 1 lug, solder (with ¼-inch hole)
  - 1 lug, solder (with 8-32 machine-screw hole)
  - 1 screw, machine, 8-32 x 1⅛ inches long
  - 1 lockwasher, 8-32
  - 1 nut, hexagonal, 8-32

118. Installation on Antenna Tuning Unit BC-939-A

Antenna Tuning Unit BC-939-A may be modified by the use of Frequency Conversion Kit MC-509 to allow operation of Radio Sets SCR-399-A and SCR-499-A on frequencies from 1.0 to 2.0 mc. To install, refer to figure 41 and proceed as follows:

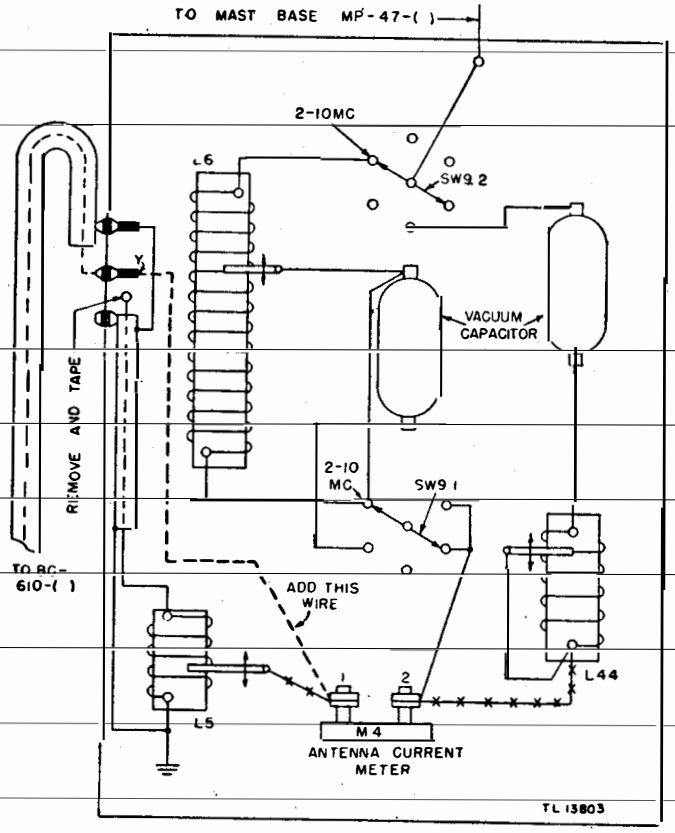

Figure 41. Modification of Antenna Tuning Unit BC-939-A

a. Open the coaxial line *inside* Antenna Tuning Unit BC-939-A by removing the center conductor of the coaxial line from point *Y*. Bend this wire away from the insulator, and tape. Attach one end of a 17-inch length of Wire W-128 to point *Y*.

b. Remove the lead running from coupling coil L_5 to the ANTENNA CURRENT meter M_4 at terminal 1.

c. Attach the free end of the 17-inch length of Wire W-128 to the ANTENNA CURRENT Meter M_4 at terminal 1.

d. Remove the lead from the high-frequency inductor coil L_{44} to the ANTENNA CURRENT meter M_4 at terminal 2. Do not remove the other lead on this same post which runs to a contact of switch $SW_{9.1}$.

e. Place the antenna range switch of Antenna Tuning Unit BC-939-A in the 2-10MC position.

119. Erection and Installation of Antenna Mast

The choice of location for the erection of the antenna is largely dependent upon tactical considerations. (See par. 26.) For best operating results, select a location away from power lines, tall trees, or other obstructions. However, necessity for cover will not always permit selection of the best location. In any case, use the best compromise between cover and a clear antenna.

a. Refer to the table of approximate dial settings (table VI) and determine whether to use the 125-foot or the 75-foot antenna. Add

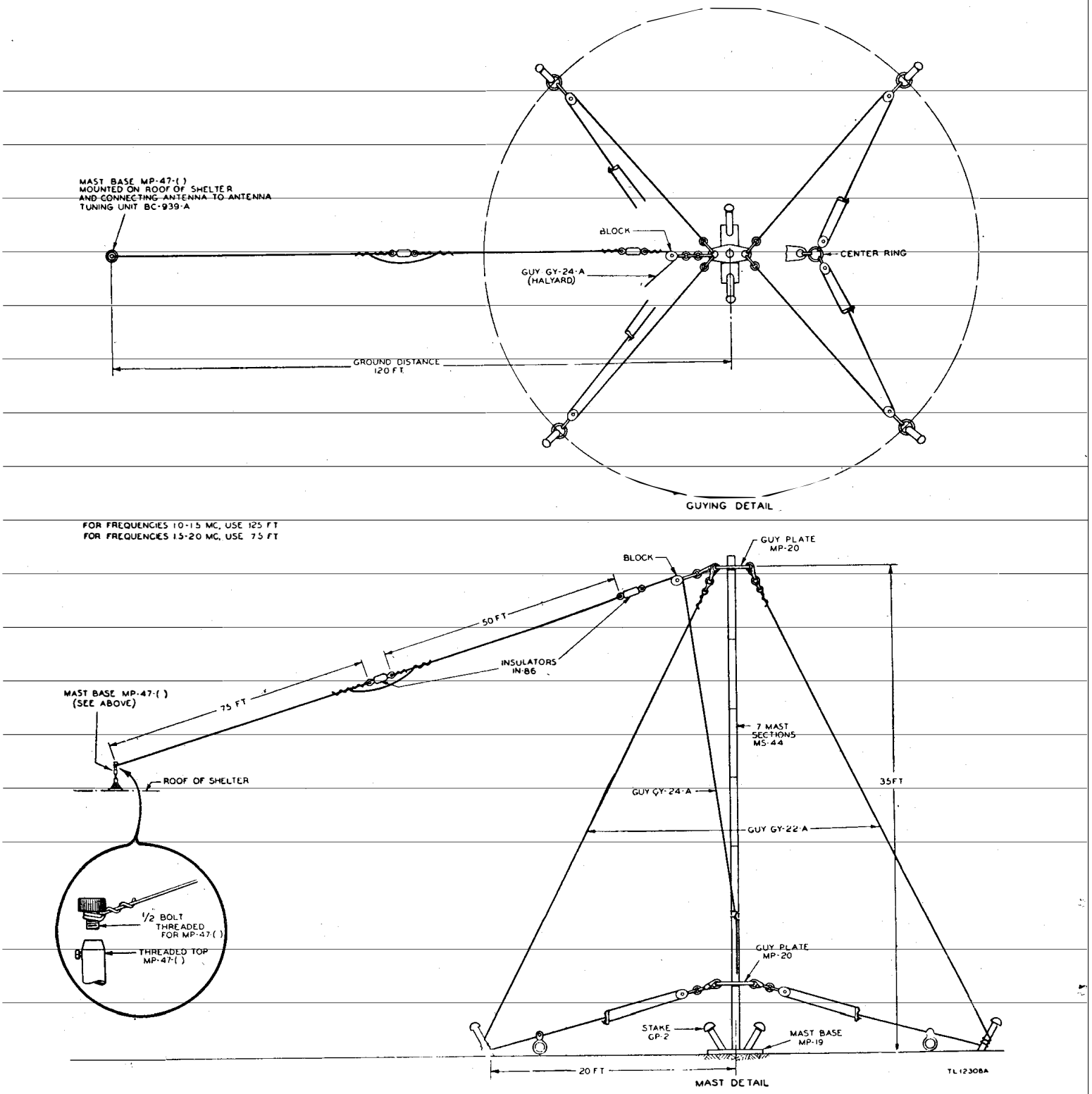

Figure 42. Installation of antenna.

a few feet to this length when locating the mast.

b. Erect the mast as directed in paragraph 125*d*(2) through (7), (9), (10), and (11). However, since 1 Guy Plate MP-20 and 4 Guys GY-41-A are not used in this installation, note the following exceptions:

(1) In paragraph 125*d*(2) omit 4 Guys GY-41-A, and use only two Guy Plates MP-20 instead of three.

(2) In paragraph 125*d*(5) omit reference to Guy Plate MP-20 at the junction of the fourth and fifth sections.

c. All necessary items for installation of the antenna mast are provided in Frequency Conversion Kit MC-509. If the ½-inch screw originally supplied in Mast Base MP-47-A is no longer available, use Mast Section MS-53.

120. Modification of Radio Transmitter BC-610-E

a. Unsolder one end of the 700-ohm, 20-watt resistor R_9 which is located adjacent to r-f choke CH_4 on the under side of the p-a tank capacitor bakelite mounting panel.

Caution: Failure to do so before operating the transmitter may result in damage to the 700-ohm resistor R_9 and r-f choke CH_4.

b. To operate on the higher frequency, resolder the open connection of resistor R_9.

121. Operation of Radio Sets SCR-399-A and SCR-499-A in Frequency Range of 1.0 to 2.0 MC.

To operate Radio Sets SCR-399-A and SCR-499-A in the frequency range of 1.0 to 2.0 mc, proceed as follows:

a. From the table of approximate dial settings (table VI), determine the correct antenna length for the selected frequency. If a 125-foot antenna is required, connect a short jumper wire around the insulator separating the 75-foot and the 50-foot lengths of antenna wire. (See fig. 42.) If a 75-foot antenna is required, omit this jumper wire.

b. From the table of approximate dial settings (table VI), determine the correct tuning unit, coil unit, and p-a fixed vacuum capacitor to be used for the desired frequency. Install these units in the radio transmitter.

c. The exciter stages are tuned by the M.O., DOUB, and INT AMP controls on the tuning units. See paragraph 47 for procedure to be followed in tuning the exciter stages.

d. To tune the final amplifier stage and adjust the antenna circuit with the p-a amplifier, proceed as follows:

Table VI. Approximate dial settings using antenna tuning unit BC-939-A

Frequency (mc)	Tuning unit				Transmitter			Antenna tuning crank 2-10MC	Antenna length (ft)
	Tuning Unit	M.O.	DOUB	INT AMP	Coil Unit	PLATE TUNING dial	Vacuum capacitor (mmf)		
1.0	TU-62	4	3.3	1.5	C-455	33	100	13	125
1.1	TU-62	34	4.7	3.0	C-455	78	100	20	125
1.2	TU-62	54	6.2	5.0	C-455	37	50	28.8	125
1.3	TU-62	69	7.4	6.9	C-455	63	50	33.6	125
1.4	TU-62	80	8.5	7.8	C-455	86	50	38.3	125
1.5	TU-62	90	10.0	9.0	C-455	20	0	44.2	125
1.5	TU-61	12	3.2	2.2	C-454	54	50	26	75
1.6	TU-61	32	4.6	4.3	C-454	74	50	29.7	75
1.7	TU-61	49	5.7	5.2	C-454	9	0	33.2	75
1.8	TU-61	63	6.7	6.2	C-454	22	0	36.3	75
1.9	TU-61	75	7.3	7.1	C-454	33	0	39.6	75
2.0	TU-61	85	8.2	8.0	C-454	42	0	42.1	75

(1) Refer to the table of approximate dial settings (table VI) for approximate setting of the PLATE TUNING dial and the 2-10MC antenna tuning crank on Antenna Tuning Unit BC-939-A.

(2) Throw the HIGH VOLTAGE PROTECT switch to HIGH VOLTAGE PROTECT.

Caution: Be sure that plate power is turned off when making coupling adjustments.

(3) Set the movable coupling link located in the tank coil (Coil Unit C-454 or C-455) at minimum coupling. Minimum coupling is obtained when the movable coil is at right angles to the tank coil.

(4) Set the transmitter control switch on the Junction Box JB-70-A to the TRANS. ON position.

(5) Place the antenna range switch of An-

tenna Tuning Unit BC–939–A in the 2–10MC position.

(6) Depress the sending key and adjust the PLATE TUNING dial until the P.A. PLATE meter dips to minimum.

Note. P–a tuning may differ by several divisions from the tuning charts when a vacuum capacitor is inserted across the p–a tank capacitor because of the production tolerances in manufacture of these capacitors. Precautions should be taken to see that the p–a plate current is at the minimum dip when tuning the PLATE TUNING wheel.

(7) Turn the 2–10MC antenna tuning crank to the approximate position indicated in table VI for the desired frequency. As this setting is approached, observe the P.A. PLATE meter for a rising plate current indication. Adjust the crank for maximum current as indicated by the P.A. PLATE meter.

(8) If the current indicated on the P.A. PLATE meter exceeds 110 ma, the coupling is too close and should be decreased. If the meter indicates less than 110 mc, the coupling should be increased. After the coupling has been reset, readjust the PLATE TUNING dial for minimum reading of the PLATE CURRENT meter.

(9) Repeat the steps in (6), (7), and (8) above until maximum antenna current is obtained.

Note. Keep in mind the 110–ma maximum allowable P.A. PLATE meter reading.

(10) Throw the HIGH VOLTAGE PROTECT switch to NORMAL. The P.A. PLATE meter should read approximately 290 ma.

(11) Carefully repeat the steps in (6), (7), and (8) above with the HIGH VOLTAGE PROTECT switch in the NORMAL position, and adjust for a reading of 290 ma on the P.A. PLATE meter. The transmitter is now ready for c-w operation. For voice operation proceed as above and then refer to paragraph 49.

122. Theory of Equipment

a. GENERAL. To extend the frequency range of Radio Transmitter BC–610–E from 2.0 to 1.0 mc, three factors are involved:

(1) A means must be provided for tuning the oscillator, buffer-doubler, and i-p-a stages over the range of 2.0 to 1.0 mc.

(2) The p-a tank circuit must be provided with increased inductance and capacitance to tune over the required frequency range.

(3) The antenna must operate efficiently on frequencies from 1.0 to 2.0 mc, and a means must be provided for coupling the antenna to the p-a tank circuit.

(4) The function of the electrical components of Frequency Conversion Kit MC–509, which make possible the extended frequency range of Radio Transmitter BC–610–E, is discussed in *b*, *c*, and *d* below.

b. TUNING UNITS TU–61 AND TU–62. The tuning circuits for the oscillator, buffer-doubler, and i-p-a stages of the transmitter are included in plug-in tuning units. Tuning Unit TU–61 covers a frequency range of 2.0 to 1.5 mc, and Tuning Unit TU–62 covers a frequency range of 1.5 to 1.0 mc. The electrical parts of these tuning units perform the same functions as the electrical parts of Tuning Units TU–47 to TU–54. See chapter 5 for the functioning of these parts.

c. COIL UNIT C–454 OR C–455 AND VACUUM CAPACITORS. The p-a plate circuit of the transmitter is tuned over a frequency range of 1.0 to 2.0 mc by the use of a proper combination of Coil Unit C–454 or C–455 and vacuum capacitors of 50 mmf (micromicrofarads) or 100 mmf respectively. (See table VI.) Coil Units C–454 and C–455 are provided with variable coupling links. By varying the position of the coupling link relative to the p-a tank coil, the operator can secure the required plate power input when loading the transmitter with the antenna.

d. ANTENNA SYSTEM. To secure efficient operation of the transmitter on frequencies from 1.0 to 2.0 mc, a long wire antenna is used. The antenna operates as a grounded quarter-wave antenna. For frequencies from 1.0 to 1.5 mc the physical length of the antenna is 125 feet, and for frequencies from 1.5 to 2.0 mc the physical length is 75 feet. Electrically, these antennas are much shorter than a quarter-wavelength; therefore, tuning the antenna to resonance at the operating frequency requires the use of a variable series inductance. By making a slight wiring change in Antenna Tuning Unit BC–939–A, coil L_6 is connected in series with the antenna and the variable coupling link of the p-a tank coil. Figure 43 is a schematic diagram of the p-a plate circuit and Antenna Tuning Unit BC–939–A, after the tuning unit wiring has been changed. The antenna, being shorter than a quarter-wavelength, represents a highly capacitive load to the transmitter. However, the antenna can be tuned to resonance at the operating frequency by the proper adjustment of coil L_6. When the antenna is tuned to resonance, maximum r-f current is indicated by ANTENNA CURRENT meter M_4 and the an-

tenna presents a purely resistive load to the transmitter. The radiation resistance at the base of a quarter-wave grounded antenna is approximately 36 ohms. The purpose of the variable coupling link of the p-a tank coil is to reflect this resistance into the p-a plate circuit. The magnitude of the reflected resistance depends on the amount of mutual reactance existing between the variable coupling link and the p-a tank coil. The effect of the reflected resistance is to reduce the Q of the p-a tank circuit, and consequently, the impedance of the p-a plate circuit. When the impedance in the p-a plate circuit is lowered, the p-a tube draws more plate current. The correct setting of the variable coupling link is that setting which allows the p-a tube to draw the recommended d-c plate current.

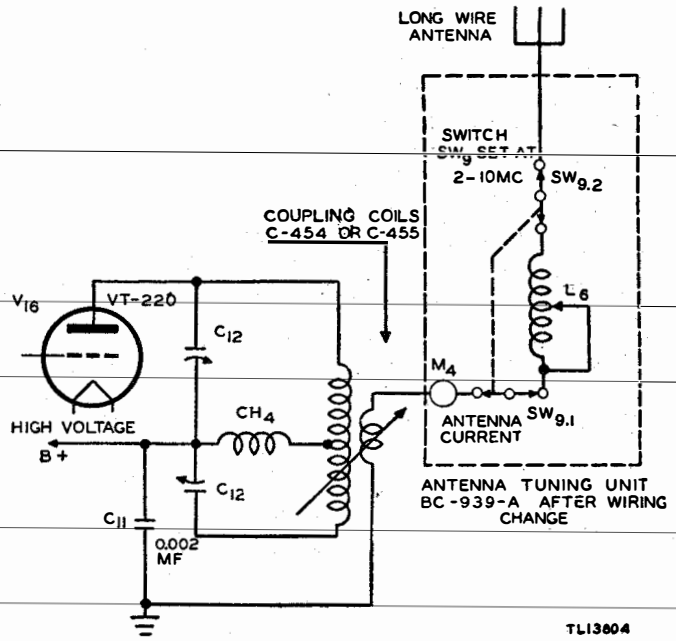

Figure 43. P-a plate circuit and Antenna Tuning Unit BC-939-A—schematic diagram.

Section II. DOUBLET ANTENNA

123. Purpose

The doublet antenna is furnished for operation from a fixed location. It is used to extend the transmitting range of Radio Transmitter BC-610-E several hundred miles. Use of the doublet antenna will increase the range of communication many times over the range obtained with the whip antenna.

124. Description

a. The doublet antenna consists of a half-wave doublet antenna (cut to operating frequency by the operators of the radio set) which is fed by means of a coaxial cable. One end of the coaxial cable is connected to the center of the antenna and the other end is coupled to Radio Transmitter BC-610-E by means of a variable link coil which is part of the transmitter tank coil. Cord CD-1290 is a coaxial cable, 50 feet long, with a connector on each end. The antenna is supported by three masts, each made up of Mast Sections MS-44-A. The masts may be improvised from other materials, if necessary.

b. A list of components contained in the doublet antenna kit follows. There are two *quantity* columns. The first *quantity* column indicates the number of items required for an installation where masts must be used. The second *quantity* column indicates the number of items required for the antenna and coupling system when other means of supporting the antenna are used.

Note. In later models the components making up the doublet antenna set are issued as part of Radio Sets SCR-399-A and SCR-499-A.

c. The coil units are contained in a package prepared for oversea shipment. Mast Sections MS-44-A are packed in the three canvas Rolls BG-176, seven mast sections to each roll. All of the guys, guy plates, mast bases, and stakes are packed in one Bag BG-102-( ). The remaining items, which are required for the antenna system only (column 3), are packed in the other Bag BG-102-( ).

d. As soon as circumstances will permit, Radio Sets SCR-399-A and SCR-499-A will be delivered with the variable link coupling tank coils listed above instead of with fixed link coupling tank coils. When the doublet antenna kit is issued for use with such sets, either the coils will be omitted from the kit or, if issued, should be returned to stock.

125. Location and Erection of Mast

a. The choice of location for the erection of the antenna is largely dependent upon tactical considerations. If possible, a location away from power lines, tall trees, or other obstructions should be selected for best operating results. Consideration of cover will not always permit

selection of the best location. In any case, use the best compromise between cover and a clear antenna. The radio set and the antenna must be so located that the cable assembly will reach from the top of the center mast to the transmitter output.

Table VII. List of components in doublet antenna kit

Article	Quantity	
	Complete doublet kit	Antenna system only
Roll BG-176	3	
Bag BG-102-( )	2	1
Mast Section MS-44-A	21	
Mast Base MP-19	3	
Guy Plate MP-20	9	
Guy GY-22-A	6	
Guy GY-41	12	
Guy GY-24-A	3	3
Insulator IN-86-A	12	12
Stake GP-2	18	
Reel RL-29	2	2
Steel tape (100-foot)	1	1
Wire W-28	250 ft	250 ft
Cord CD-1290 (50 ft)	1[1]	1[1]
Coil Unit C-387-D	1[2]	1[2]
Coil Unit C-388-C	1[2]	1[2]
Coil Unit C-389-C	1[2]	1[2]
Coil Unit C-390-C	1[2]	1[2]
Coil Unit C-447-B	1[2]	1[2]
Coil Unit C-448-B	1[2]	1[2]
Coil Unit C-449-B	1[2]	1[2]

[1] This cord is so designed that if additional distance between the doublet antenna and the radio set is required, several sections may be joined together until the desired length is obtained.
[2] See *d* below.

b. The doublet antenna radiates strongest in a direction at right angles (90°) to the plane of its wire. Remember this, as well as the location of the station with which communication is desired, when selecting the position of the masts.

c. Three masts are used to support the antenna; the center mast is used to support the weight of the coaxial-cable feeder line.

d. Erect the masts and install the antenna in accordance with the following procedure:

(1) Cut the antenna wire for the lowest operating frequency to be used. This may be obtained from the formula:

$$\text{Antenna length in feet} = \frac{468}{F(mc)}$$

($F(mc)$ is the lowest operating frequency in megacycles.) The frequency vs length curve (fig. 44) can be used to obtain the approximate antenna length. To obtain the distance separating the outer masts, add 6 or 8 feet to the length determined above. The third antenna mast is erected at the midpoint, in line with the two outer masts. See figure 46 for the general layout to be followed.

(2) Select the following parts from the kit for one mast:

7 Mast Sections MS-44-A
6 Stakes GP-2
3 Guy Plates MP-20
1 Mast Base MP-19
2 Guys GY-22-A
1 Guy GY-24-A (antenna halyard)
4 Guys GY-41

(3) At the point selected for one of the outer masts, stake Mast Base MP-19 to the ground with two Stakes GP-2. Use the hammer supplied with the radio set.

(4) Using a radius of 20 feet from Mast Base MP-19, drive in the remaining four Stakes GP-2, 90° apart from one another and at an angle of 45° with the antenna wire. (See fig. 45.)

Note. When measuring off distances on the ground to determine the position of the stakes, a mast section may be used conveniently since its over-all length is 5½ feet (5 feet NOT INCLUDING the 6-inch ferrule (smaller diameter portion)) at one end.

(5) Assemble the seven Mast Sections MS-44-A with one Guy Plate MP-20 at the top of the mast, another at the junction of the fourth and fifth sections, and the remaining guy plate at the junction of the first and second sections.

(6) Slip the bottom mast section over the mast base.

(7) To one hole in Guy Plate MP-20 at the top of the mast, attach the two ends of Guy GY-22-A and the block of Guy GY-24-A (halyard) by means of the snap hooks. (See fig. 45.) To the hole in the opposite end of the top guy plate, attach the two ends of the remaining Guy GY-22-A. Place all of the rings with block attached (not the center ring) over the corresponding Stake GP-2.

(8) To Guy Plate MP-20 at the junction of the fourth and fifth sections near the center of the mast, attach one end of each of the 4 Guys GY-41-A, using two snap hooks in each of the two holes. Since these guys are not used in raising the mast, temporarily tie the loose ends near the bottom of the mast to avoid tangling when the mast is raised.

(9) Guy GY-24-A is used as a halyard to raise and lower the antenna wire. Make sure that this guy will be on the antenna side of the mast after erection. Secure both ends of this guy to a point near the bottom of the mast to

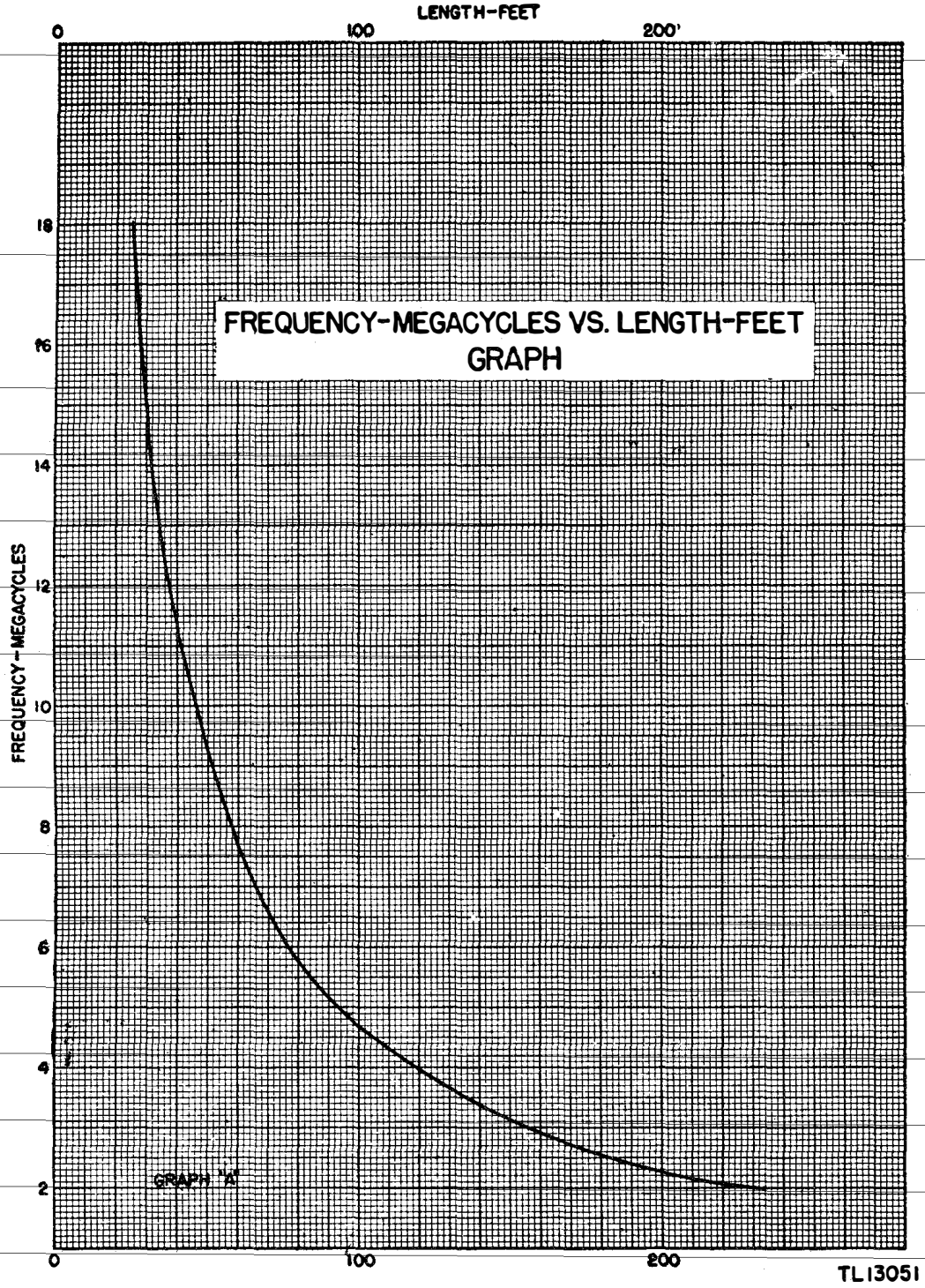

Figure 44. Frequency vs length curve.

keep it out of the way while the mast is being raised, and also to prevent either end from accidentally getting out of reach.

(10) The mast can now easily be raised. One man grasps the center ring of Guy GY-22-A and walks toward the base of the mast. (See fig. 46(A).) Another man assists in the erection procedure by lifting the mast from the ground in a manner similar to that used in raising a ladder. At the same time, a man guides the bottom of the mast onto Mast Base MP-19 until the mast is halfway erect, then quickly grasps the center ring of the remaining Guy GY-22-A (fig. 46(B)) and makes the necessary adjustment on the length of the guy when the mast is erect. When the mast has been brought into a

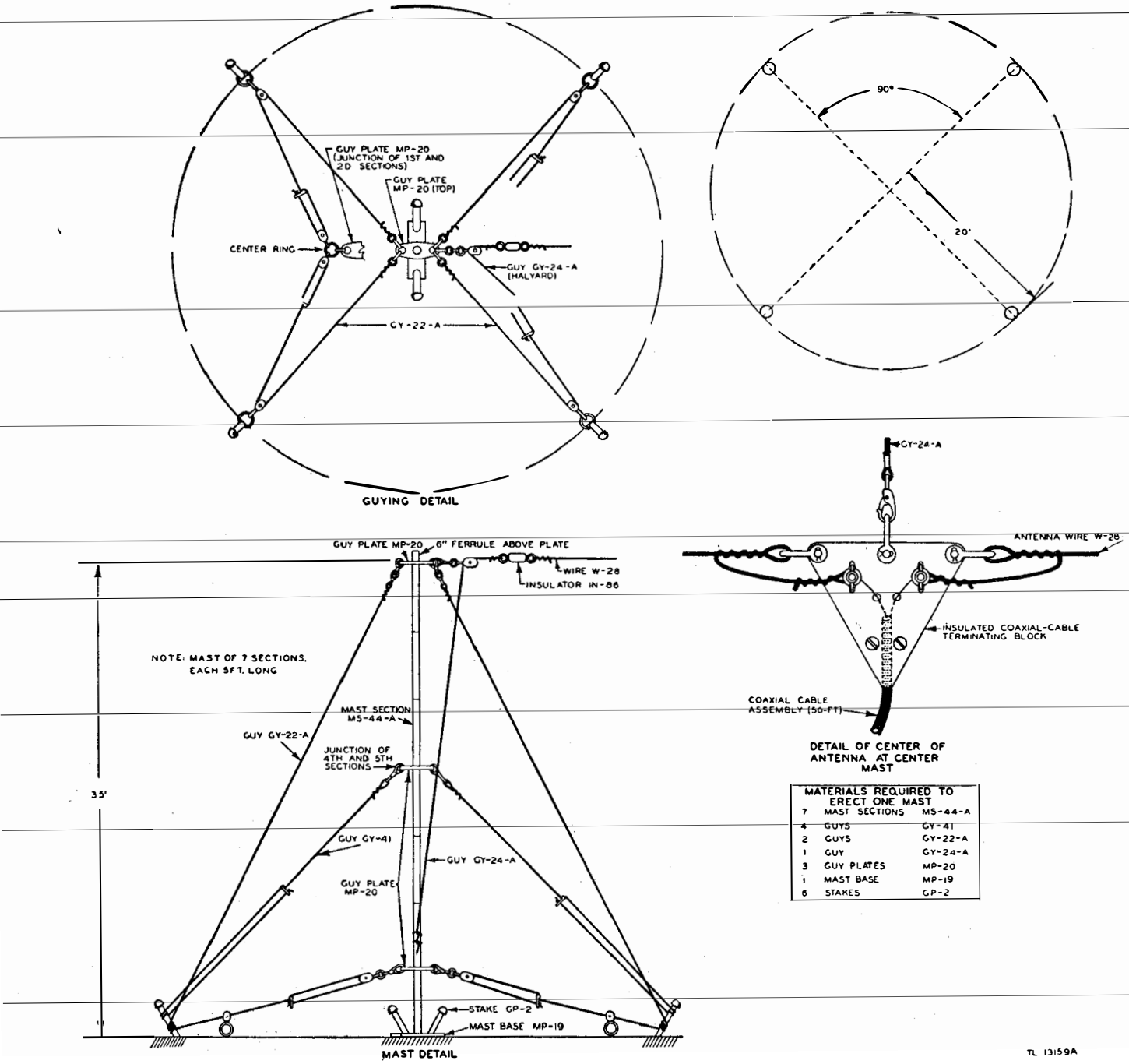

MATERIALS REQUIRED TO ERECT ONE MAST		
7	MAST SECTIONS	MS-44-A
4	GUYS	GY-41
2	GUYS	GY-22-A
1	GUY	GY-24-A
3	GUY PLATES	MP-20
1	MAST BASE	MP-19
6	STAKES	GP-2

Figure 45. Details of one mast and coaxial-cable connector.

vertical position, adjust both Guys GY–22–A until the mast is plumb.

(11) Untie the loose ends of the four Guys GY–41–A, attach them to their respective stakes, and tighten them firmly to prevent any tendency of the mast to bow.

(12) After the masts are erected, the blocks will not be needed until the mast is to be lowered. Lift off the rings and attached blocks that are secured to the stakes one at a time, and loop the guy rope two or three times around the guy stake. (See fig. 45.) This is done to prevent antenna masts from bowing or bending.

(13) Erect the other two masts in the same manner.

(14) Select the following parts from the kit: Wire W–28, coaxial-cable Cord CD–1290 (50-foot), and Insulators IN–86–A.

(15) Determine the length of the antenna in accordance with the formula given in (1) above, and cut the required length of Wire W–28. If operation on more than one frequency is

planned, cut the antenna for the lowest frequency.

(16) Attach one Insulator IN–86–A to each end of the antenna.

(17) Cut the antenna wire at the exact center and join it to the coaxial-cable insulating terminating block at one end of Cord CD–1290. (See fig. 45.) One end of the halyard (Guy GY–24–A) must be made fast to the coaxial-cable terminating block as shown in the same figure, in order to support the weight of both the antenna and the coaxial cable.

(18) Fasten the Guy GY–24–A halyards on the two end masts to their respective antenna insulators, and raise the antenna into position.

126. Installation in Radio Transmitter BC–610–E

a. Make the following changes in the wiring of Radio Transmitter BC–610–E:

(1) Disconnect the coaxial-cable link between Radio Transmitter BC–610–E and Antenna Tuning Unit BC–939–A from the outside terminals of the feed-through insulators on the left side of the transmitter cabinet.

(2) Connect the other end of coaxial-cable Cord CD–1290 from the doublet antenna to the feed-through insulators by means of the connector on the end of the coaxial-cable assembly (Cord CD–1290).

b. To place the radio set in operation, proceed as follows:

Caution: NEVER MAKE THE FOLLOWING ADJUSTMENTS WHILE THE PLATE POWER IS ON. TURN OFF THE PLATE POWER, MAKE THE NECESSARY ADJUSTMENTS, AND THEN TURN THE POWER BACK ON. FOLLOW THIS PROCEDURE UNTIL THE ADJUSTMENTS ARE COMPLETED. DO NOT RELY UPON THE INTERLOCK SWITCHES FOR PROTECTION.

(1) Select the new coupling coil unit with the variable link coil whose frequency range includes the frequency for which the doublet antenna was cut. Plug the coil into the jack bar in the transmitter.

Note. Variable link coil units are supplied in a package prepared for oversea shipment. They should be unpacked and placed in Chest CH–88 in the location formerly occupied by the fixed-link transmitter tank coils, originally supplied with the equipment. The fixed link coils should be stored elsewhere or returned to depot stock when so authorized.

(2) Rotate the link coil so that the purple mark on the link coil is next to the similar mark on the primary (fixed) winding. Then rotate the link coil, in a clockwise direction, until its axis is at an angle of 90° with the axis of the primary winding. This is a position of minimum coupling. (See fig. 48.)

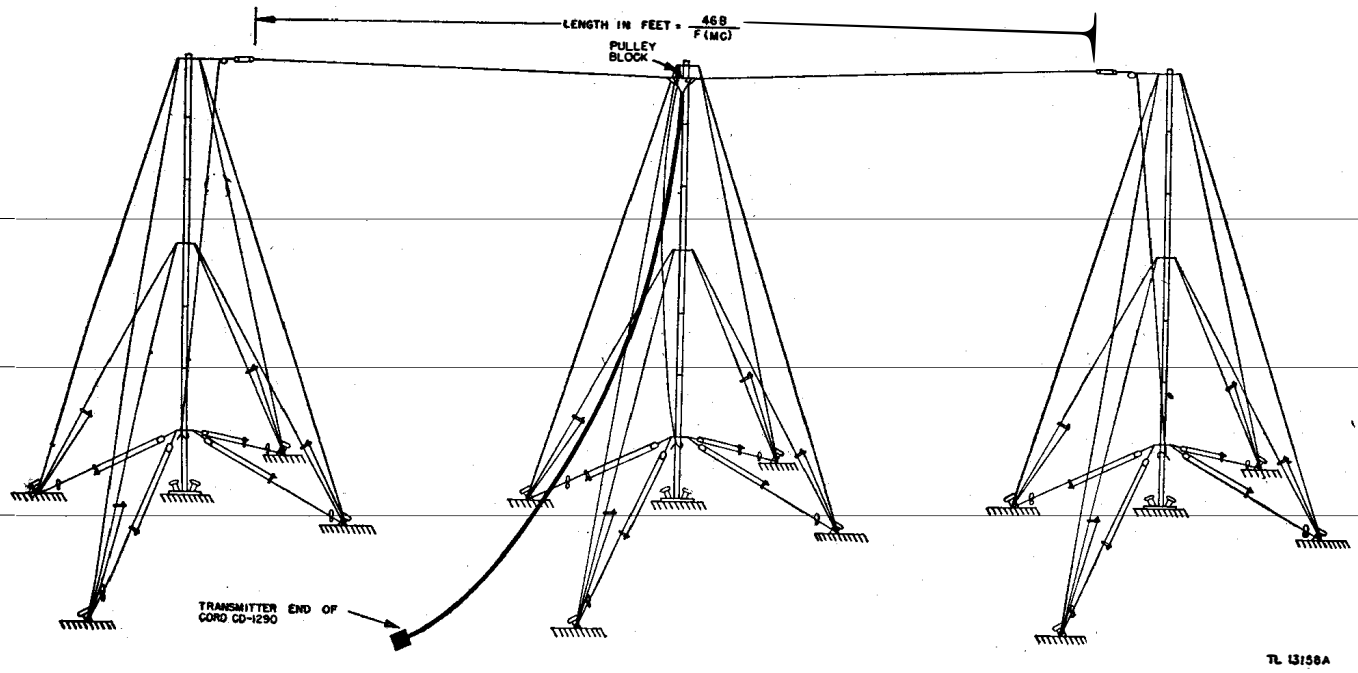

Figure 46. Installation details.

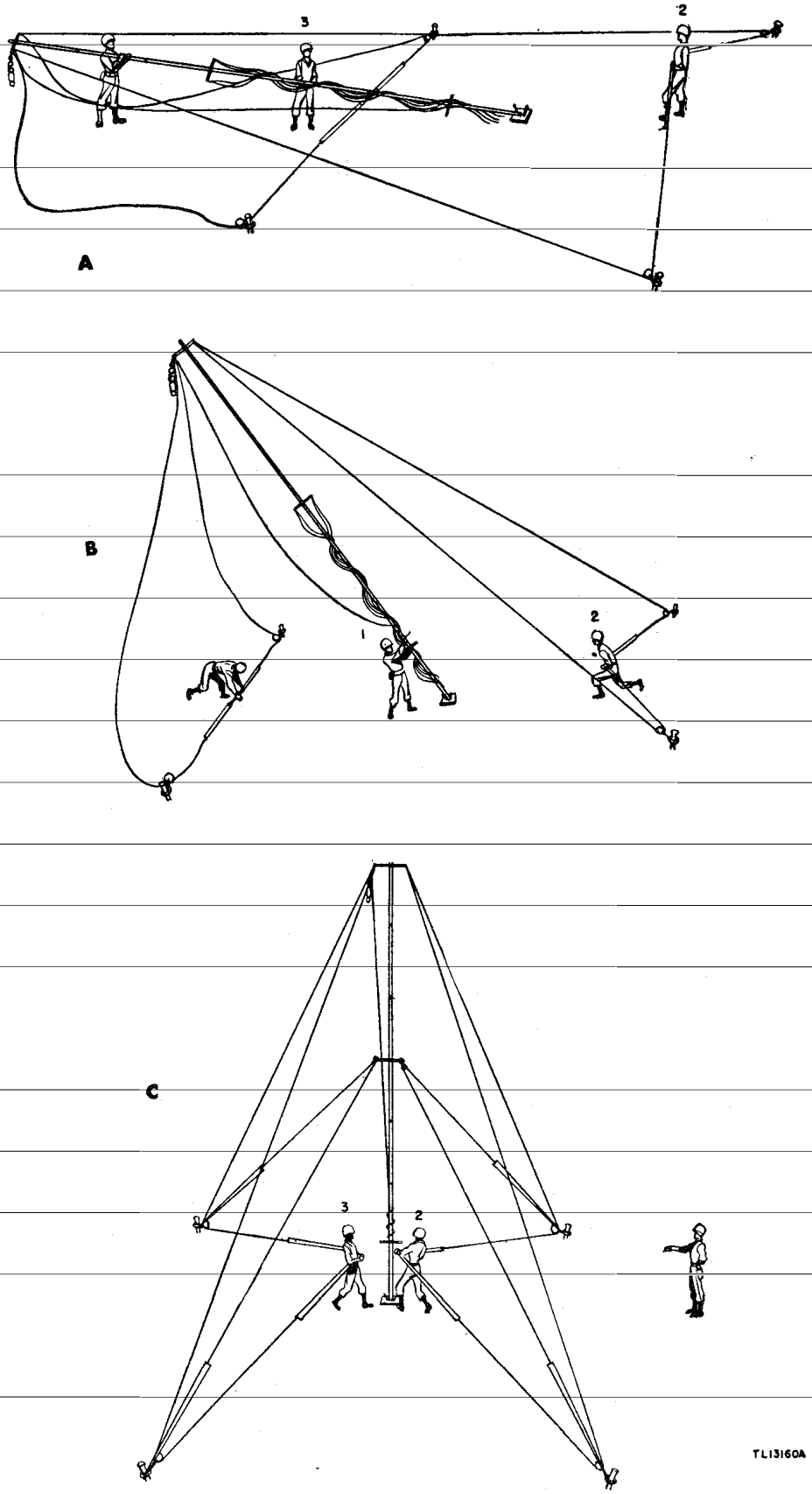

Figure 47. Erection of masts.

(3) Tune up the transmitter in the usual manner with the HIGH VOLTAGE PROTECT switch in the HIGH VOLTAGE PROTECT position. Resonate the final-amplifier plate tank circuit by turning the PLATE TUNING wheel for a minimum reading of plate current, as indicated by the P.A. PLATE meter.

(4) Turn off the plate power and open the left-hand cover of the transmitter in order to gain access to the final tank coil. Increase the coupling of the coils by rotating the link coil in a counterclockwise direction, until its axis is at an angle of about 45° with the axis of the tank coil. Close the transmitter cover, turn the plate power on, and retune the PLATE TUNING wheel for minimum plate current. The value of plate current indicated by the P.A. PLATE meter should show an increase over the value shown when the transmitter was tuned with the variable link coil in the minimum coupling position. The position of the link coil must be adjusted so that the value of plate current indicated at resonance (minimum plate current) is 100 ma with the HIGH VOLTAGE PROTECT switch in the HIGH VOLTAGE PROTECT position.

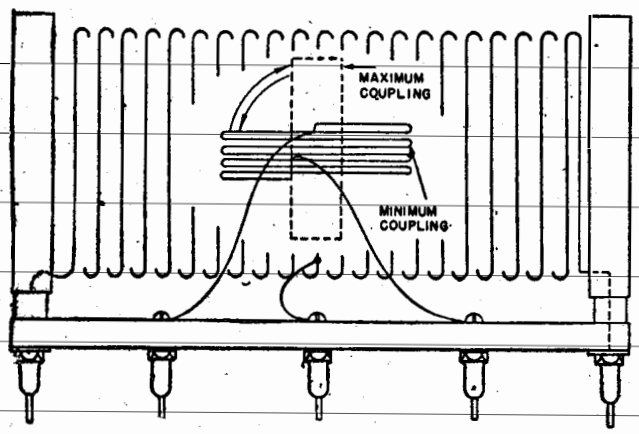

Figure 48. Method of adjusting coupling.

Note. Always remember to retune the final plate tank circuit to resonance (minimum plate current) after making each coupling readjustment of the variable link coil.

(5) Place the HIGH VOLTAGE PROTECT switch in the NORMAL position, and turn the transmitter on. The reading on the P.A. PLATE meter should be from 290 to 300 ma. If the value of plate current differs materially from these figures, turn the transmitter off and readjust the coupling of the link coil. A value of plate current greater than 300 ma requires a reduction in coupling; a value of plate current less than 290 ma requires an increase in coupling.

c. To change the frequency of operation, proceed as follows:

(1) Plug in the new coil unit whose frequency range includes the desired operating frequency.

(2) If the antenna has been cut for the lowest frequency of operation as outlined in *b*(1) above, it will be necessary to shorten the antenna for the new frequency. Lower the antenna, determine the proper length for the new frequency, and cut the antenna at points of equal distance from the center of the antenna for the new length. Insert an Insulator IN–86–A at both points where the antenna was cut. Hoist the antenna back into position and tune the transmitter for operation on the new frequency in accordance with the instructions given in *b* above. For example, if the original length of the antenna was 234 feet (2 mc) and it is desired to operate on 4 mc, it will be necessary to reduce the length of the antenna to 117 feet, or 58.5 feet each side of center. When it is desired to go back to the lower frequency, place a wire jumper across the insulators inserted for operation at the higher frequency. The antenna may be divided into a number of sections to permit operation on different frequencies. Use jumpers across the insulators between the section if necessary.

Note. The doublet antenna works best at the frequency for which it was cut. It can be operated without serious loss of efficiency, however, over a band extending to approximately 100 kc (kilocycles) each side of the frequency for which it was designed.

127. Maintenance

a. To insure proper operation of the doublet antenna system, routine checks of the electrical connections should be made from time to time.

(1) Check the connections from the coaxial-cable assembly to the center of the antenna.

(2) Check the connections from the coaxial-cable feeder line to the feed-through insulators on the side of Radio Transmitter BC–610–E.

(3) Check the condition and connections of the coaxial cable assembly (Cord CD–1290) and the coil units.

(4) Check the condition of the coaxial-cable insulating terminating block at the antenna. It is imperative that no moisture get into this connector. Moisture will seriously impair its operation.

b. Check the tension on Guys GY–22–A and GY–41 daily. Usually it will be found that the guy ropes will shrink during the night and stretch during the day. Sufficient slack must be allowed to permit normal shrinking during damp periods in order to prevent undue strain on the guys. Examine the guy stakes daily to make sure that they are seated firmly in the ground.

128. Differences in Coil Units

a. The following tabulation illustrates the difference between the new coil units that are a part of this kit and those previously supplied with the transmitter:

Frequency range (in mc)	New coil units		Coil units previously supplied
	Coil Unit	No. of turns on link coils	
2.0 to 3.5	C–387–D	6.5	C–387–B
3.5 to 4.5	C–388–C	4.5	C–388–A
4.5 to 5.7	C–389–C	4.5	C–389–A
5.7 to 8.0	C–390–C	4.5	C–390–A
8.0 to 11.0	C–447–B	4.5	C–447
11.0 to 14.0	C–448–B	2.5	C–448
14.0 to 18.0	C–449–B	1.5	C–449

b. The new coil units will also operate equally well into Antenna Tuning Unit BC–939–A when connected to a 15-foot whip antenna. Note that the tuning charts may be slightly in error with respect to the listed dial setting of the plate tuning control. The error may vary somewhat depending on operating frequency and ground conditions. The tuning charts will serve, however, to locate the proper dial settings approximately. The final plate tank circuit must be tuned to resonance at all times, as pointed out in paragraph 47.

c. When the new coil units are used with Antenna Tuning Unit BC–939–A, the link coil should be set for maximum coupling. Maximum coupling is indicated when the plane of the link coil winding is parallel to the plane of the primary winding, and when the purple mark on the link coil is next to the identical mark on the primary winding.

129. Theory of Equipment

a. GENERAL. When Radio Transmitter BC–610–E is used with a doublet antenna, no antenna tuning unit is required because the antenna is cut to resonate at the operating frequency and represents, electrically, one-half wavelength. Theoretically, the radiation resistance at the center of a half-wave antenna in free space is 73 ohms. The actual value of radiation resistance of a practical antenna may be above or below 73 ohms, depending on the height of the antenna above ground and the nature of surrounding objects. However, power can be fed to the antenna by means of any length of untuned transmission line which has a characteristic impedance of approximately 70 ohms. (See fig. 49).

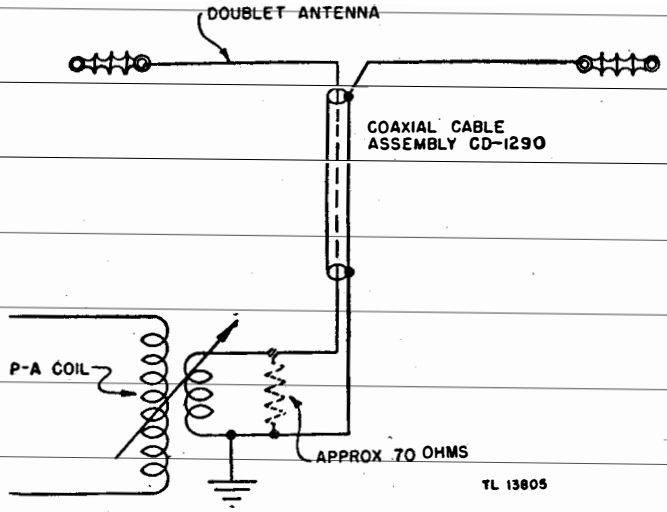

Figure 49. Method of feeding power to the antennas.

b. CORD CD–1290 (50-FOOT). When an untuned transmission line is used to feed power to the antenna, the line must be terminated in its characteristic impedance. The characteristic impedance of coaxial-cable Cord CD–1290 is approximately 70 ohms. Therefore, an impedance match is effected by connecting the coaxial-cable (Cord CD–1290) directly to the center of a half-wave doublet antenna. Cord CD–1290 is supplied in 50-foot lengths. Several lengths can be connected without materially increasing the losses in the transmission line.

c. COUPLING COILS. The coupling coils supplied with the doublet antenna kit couple the power amplifier to the transmission line. The seven coils cover a frequency range of 2.0 to 18.0 and are provided with variable link coils. These coils take the place of the fixed link p-a tank coils normally supplied with the transmitter. The desired power output from the power amplifier is obtained by varying the degree of coupling between the p-a plate circuit and the load. This is accomplished as follows: One end of Cord CD–1290 is connected to the center of the half-wave doublet antenna, and the other end is connected to the variable link coil inside

the p-a tank coil. The transmission line, which is terminated in its characteristic impedance, represents a purely resistive load of approximately 70 ohms. (See fig. 49.) This resistance is reflected into the p-a plate tank circuit because of the mutual reactance existing between the variable link coil and the p-a tank coil. The magnitude of the reflected resistance increases or decreases as the coupling between the variable link coil and the p-a tank coil is increased or decreased. The reflected resistance lowers the *Q* of the p-a plate tank circuit, and consequently, the impedance in the p-a plate circuit. When the impedance in the p-a plate circuit is lowered, the d-c plate current increases. The correct setting of the variable link coil is the setting which allows the p-a tube to draw the recommended d-c plate current.

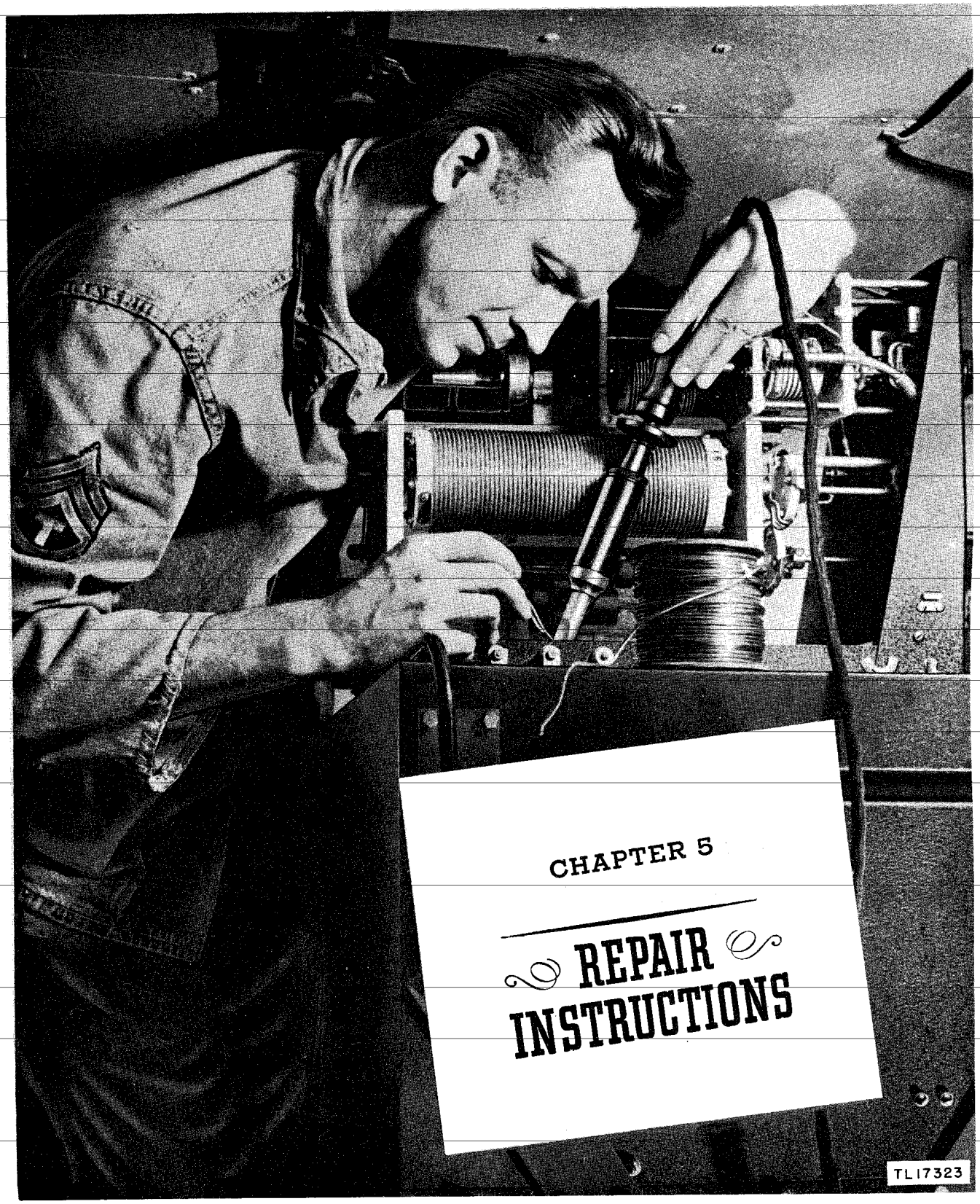

CHAPTER 5

REPAIR INSTRUCTIONS

CHAPTER 5

REPAIR INSTRUCTIONS

Note. Failure or unsatisfactory performance of equipment used by Army Ground Forces and Army Service Forces will be reported on WD AGO Form 468 (Unsatisfactory Equipment Report). For particulars see paragraph 195. If Form 468 is not available, see TM 38-250. Failure or unsatisfactory performance of equipment used by Army Air Forces will be reported on Army Air Forces Form No. 54 (Unsatisfactory Report).

Section I. SIMPLIFIED BLOCK DIAGRAMS

130. Radio Transmitter BC-610-E, C-W Operation (fig. 50)

Radio Transmitter BC-610-E is a master-oscillator power-amplifier transmitter. The frequency of the transmitted signal is accurately controlled by a variable-frequency or crystal-controlled master oscillator, which is keyed for c-w operation. The output of the oscillator is fed into a buffer-doubler stage. When the variable-frequency master oscillator is used, the buffer-doubler stage operates as a frequency doubler for all frequencies up to 12 mc, and as a frequency quadrupler for frequencies from 12 to 18 mc. For crystal operation in the 2- to 4-mc range, the buffer-doubler stage is tuned to the crystal frequency, and operates only as a buffer amplifier; in the 4- to 12-mc range, this stage operates as a buffer-doubler; and in the 12- to 18-mc range, it operates as a frequency quadrupler. The buffer-doubler stage improves the frequency stability of the transmitter by isolating the oscillator stage from the i-p-a and p-a stages. The r-f output of the buffer-doubler stage is adequate to excite the i-p-a stage. In turn, the i-p-a stage develops the power necessary to drive the p-a stage. The p-a stage develops the r-f energy which is radiated from the transmitting antenna. The tuned circuits for the oscillator, buffer-doubler, and i-p-a stages are mounted in a single plug-in tuning unit. The transmitter accommodates three of these plug-in tuning units, any one of which can be selected by the BAND SWITCH. Seven plug-in tank coils and a vacuum capacitor are provided for tuning the p-a stage over the frequency range of the transmitter. The vacuum capacitor is required when operating on frequencies from 2 to 2.5 mc. Antenna Tuning Unit BC-939-A couples the transmitting antenna to the output of the p-a stage.

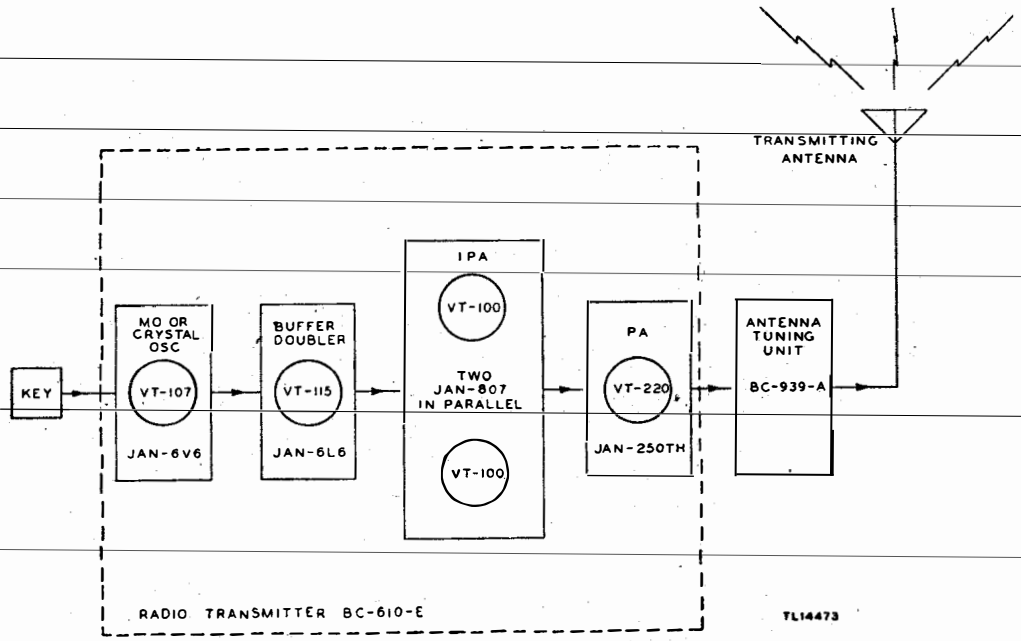

Figure 50. Radio Transmitter BC-610-E—simplified block diagram, c-w operation.

131. Speech Amplifier BC–614–E (fig. 51)

When in use, the remote telephone or the dynamic microphone is connected to the input of the first a-f (audio-frequency) amplifier, but the carbon microphone is connected to the input of the second a-f amplifier. This arrangement provides proper impedance matching without complicated switching arrangements. The output of the first amplifier is applied to the input of the second amplifier which in turn feeds the third a-f amplifier and the phase inverter. A portion of the a-f output of the third amplifier is applied to the modulation limiter. The modulation limiter produces a d-c control voltage which is applied to the second audio stage as a bias voltage which reduces the gain and prevents over-modulation of the transmitter. The outputs of the third a-f amplifier and the phase inverter are coupled to the fourth amplifier. The output voltage of the fourth amplifier is used to excite the driver stage for the modulator in Radio Transmitter BC–610–E. The c–w sidetone oscillator and the sidetone amplifier supply a sidetone signal to the headsets during c–w operation.

132. Radio Transmitter BC–610–E and Speech Amplifier BC–614–E [Phone Operation] (fig. 52)

The output of the speech amplifier is applied to the push-pull driver stage in Radio Transmitter BC–610–E. The power output of the driver is sufficient to operate the push-pull modulator which develops power enough to modulate the transmitter properly. The output of the push-pull modulator is applied to the p-a stage in which the r-f and a-f voltages are combined to produce the amplitude-modulated r-f energy that is radiated from the transmitting antenna. For a discussion of the other stage shown in figure 52, see paragraphs 130 and 131.

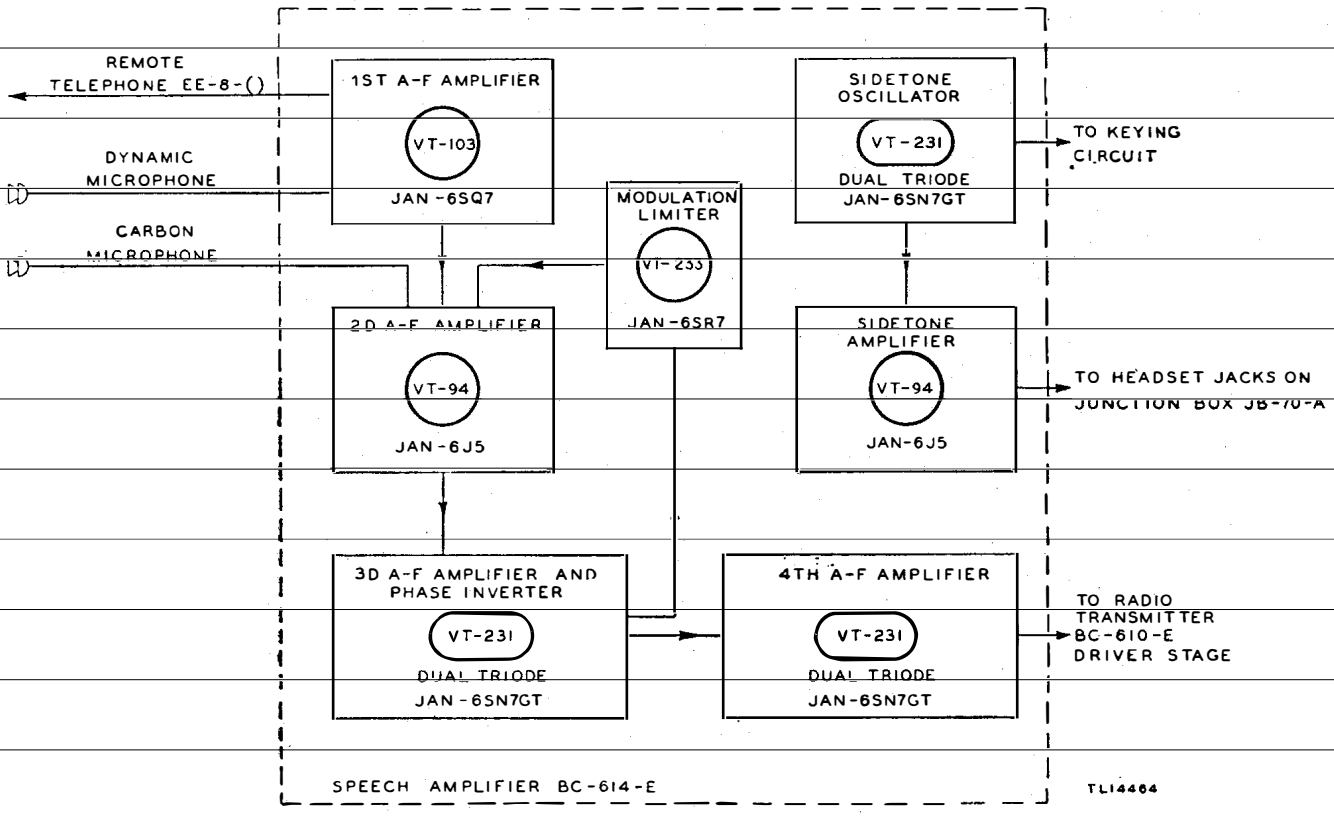

Figure 51. Speech Amplifier BC–614–E—simplified block diagram.

Section II. THEORY OF RADIO TRANSMITTER BC–610–E

133. Oscillator Stage

The m-o stage develops r-f oscillations which are stable in frequency. The m-o stage can be operated as an electron-coupled variable-frequency oscillator, or as a crystal-controlled electron-coupled oscillator. (See fig. 53.) The M.O.-XTAL switch SW_{15} on the tuning unit is used to select the desired type of m-o operation. For simplicity, only the variable-frequency oscillator is called the master oscillator; however, the crystal oscillator is also a master oscil-

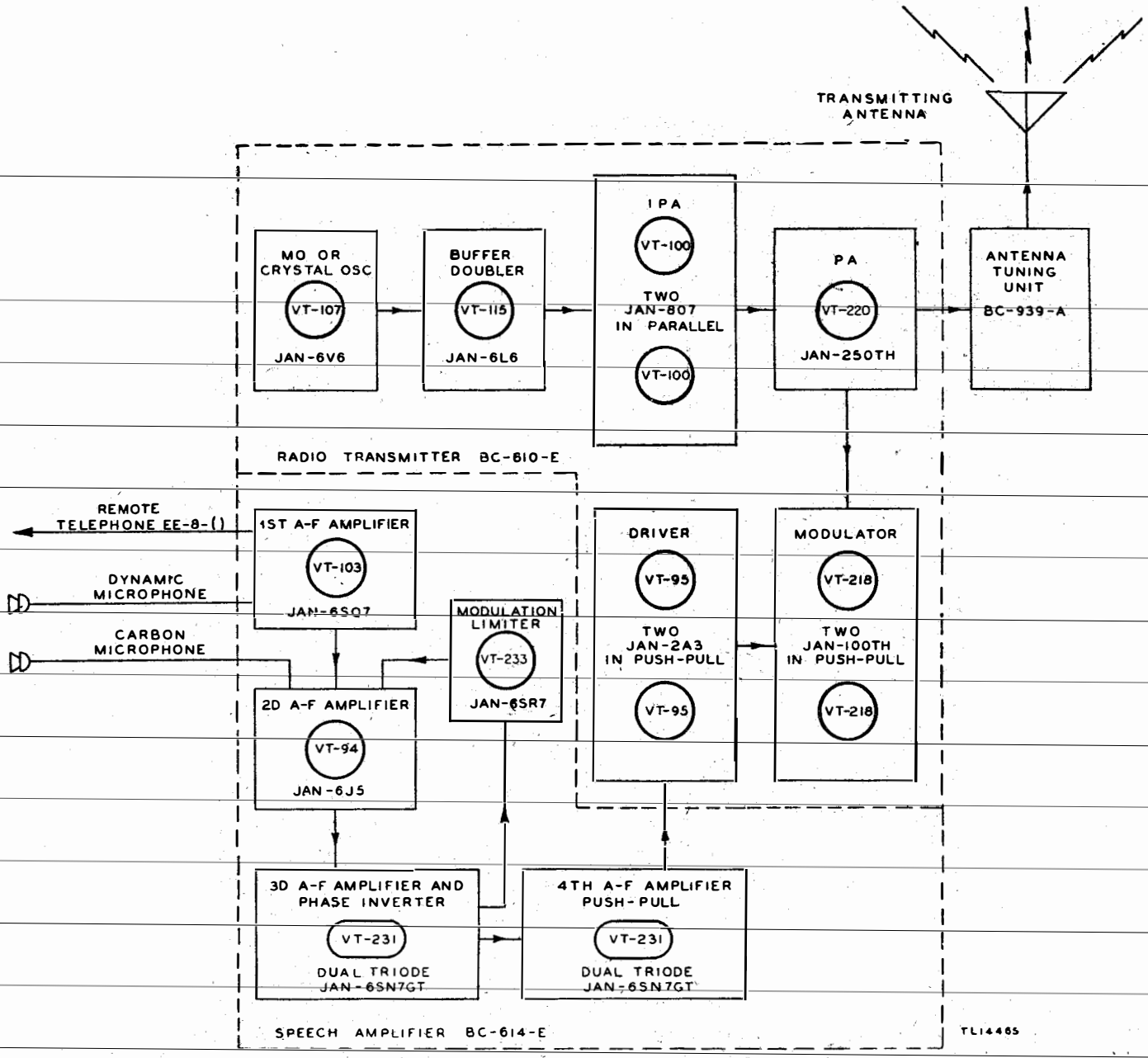

Figure 52. Radio Transmitter BC-610-E and Speech Amplifier BC-614-E—simplified block diagram, phone operation.

lator in Radio Transmitter BC-610-E. The operation of both oscillators is explained in terms of the Hartley oscillator.

a. Hartley Oscillator. For purposes of comparison, each part in the Hartley circuit (fig. 54(A)) is given the part number of the corresponding part used in Radio Transmitter BC-610-E. The functioning of the parts in the shunt-feed Hartley oscillator (fig. 54(A)) is as follows:

(1) The screen grid of tube V_8 (Tube JAN-6V6 (VT-107)) acts as the anode (plate) of a triode oscillator for which the control grid and cathode form the other two triode elements.

(2) Inductor L_8 is connected so that the turns between 1 and 2 are between the grid and cathode, and the turns between 2 and 3 are between the cathode and plate.

(3) Capacitors C_{31} and C_{36} are connected in parallel across inductor L_8 so that L_8 and C_{31} plus C_{36} form the resonant LC circuit. The resonant frequency can be adjusted by means of variable capacitor C_{31}.

(4) Capacitor C_{42} is the grid capacitor.

(5) Capacitor C_2 blocks the d-c plate voltage from the tuned circuit and the grid, but couples r-f variations to inductor L_8.

(6) Choke coil CH_1 isolates r-f voltages on the grid.

(7) Resistor R_1 is a grid leak and acts with the grid capacitor to provide grid bias.

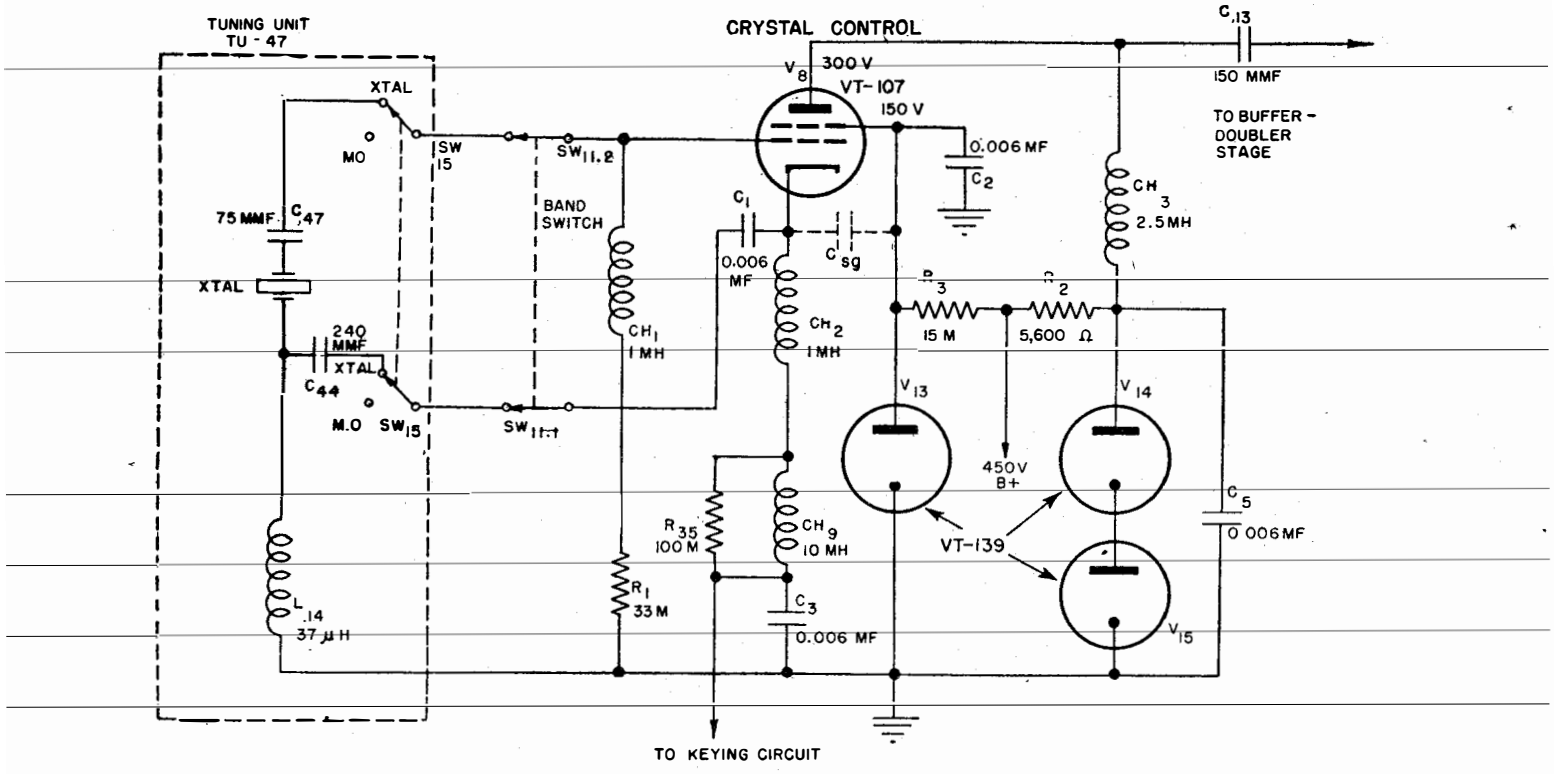

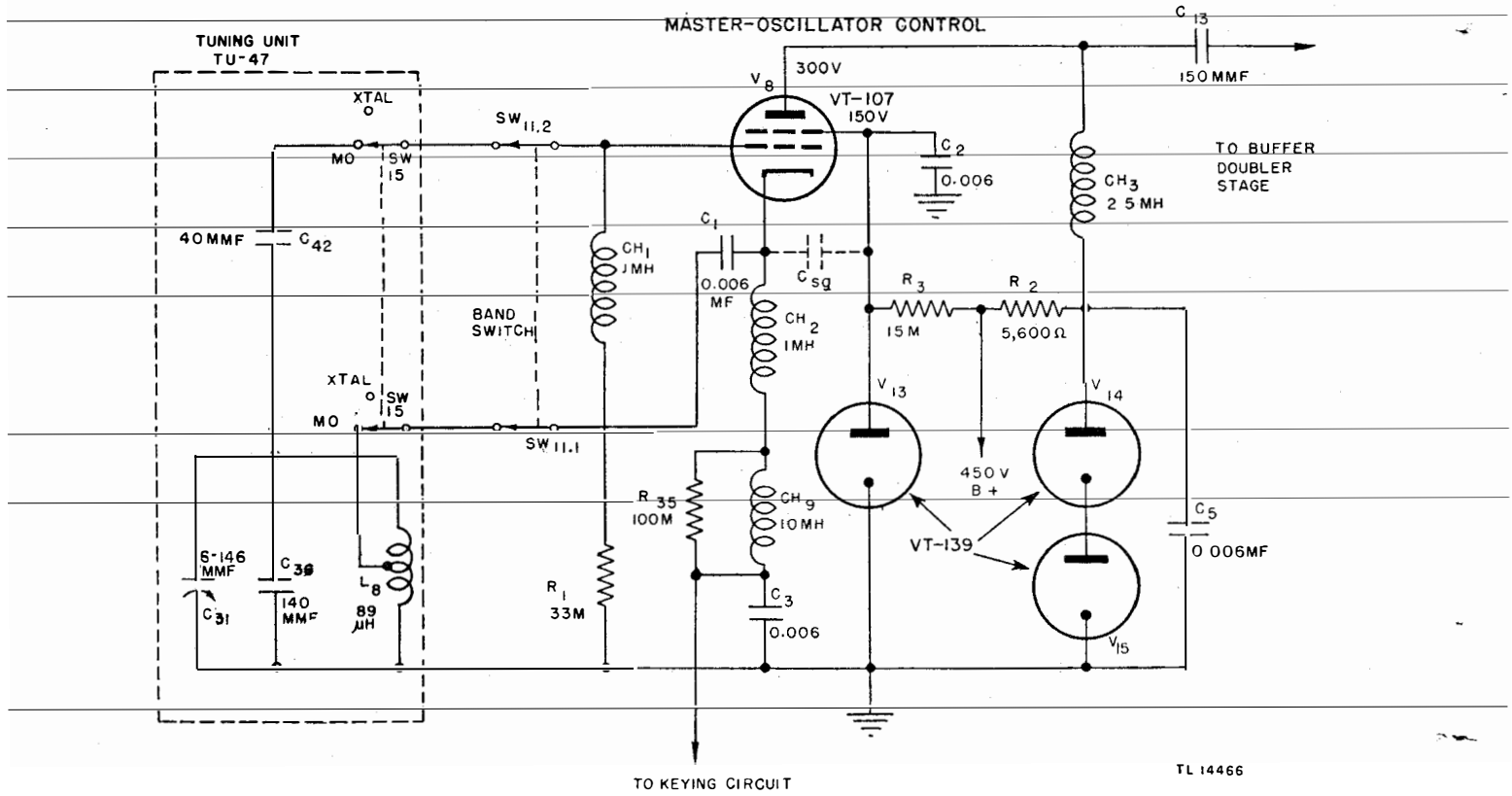

Figure 53. Functional diagram of oscillator stage.

(8) Before the key is closed, the bias is zero. When the key is closed, d-c supply voltage is applied between the oscillator anode and cathode. This change of plate voltage causes a flow of energy from the anode through capacitor C_2 and the plate section (2–3) of coil L_8 to the cathode. This current in the plate section of L_8 induces a voltage across both the plate and the grid section (1–2) of L_8. The voltage induced across L_8 charges capacitor C_{31} and C_{36}, and the resonant circuit starts oscillating. The oscillating current in L_8 causes an r-f voltage across both sections of the coil. The voltage across the grid section (1–2) is coupled through the grid capacitor to the grid, and this voltage is the grid excitation voltage. The excitation voltage is an r-f voltage at the resonant frequency of L_8, C_{31}, and C_{32}. As the excitation voltage varies the grid to cathode voltage, corresponding variations of anode voltage occur and additional energy is fed back through C_2 to the plate section of L_8 in the resonant circuit. The energy thus fed back is sufficient to make up for the losses in the resonant circuit, so that its oscillations continue. As the grid excitation voltage swings the grid positive, capacitor C_{42} charges to a voltage nearly equal to the positive peak of the excitation voltage. The voltage of C_{42} acts as a bias voltage. Grid leak R_1 prevents C_{42} from discharging rapidly when the excitation voltage is lower than the grid capacitor voltage. In other words, the grid capacitor and the grid leak work together to develop the bias voltage for the oscillator stage.

b. Modified Hartley Circuit in Master Oscillator. The modified Hartley circuit of Tuning Unit TU–47 (fig. 54(B)) operates the same as the ordinary Hartley circuit, except for the following circuit changes:

(1) Chokes CH_2 and CH_9 are inserted between the cathode of V_8 and the key.

(2) R_{35} is across CH_9 and acts as a parasitic suppressor.

(3) Capacitor C_1 is between the cathode of V_8 and point 2, the junction of the plate and grid sections of L_8.

(4) When the key is closed, the cathode is connected through the low d-c resistance of choke coils CH_2 and CH_9 to ground. The oscillator action is then the same as explained in *a* above, except that the high r-f impedance of choke coils CH_2 and CH_9 forces the r-f variations at the oscillator anode to feed back through the lower r-f impedance of the cathode section (2–3) of L_8. Capacitor C_1 is included to keep the d-c current from flowing through the cathode section of L_8, but C_1 effectively connects the cathode to point 2 at radio frequencies. Thus in this circuit, the cathode is above ground at r-f potentials.

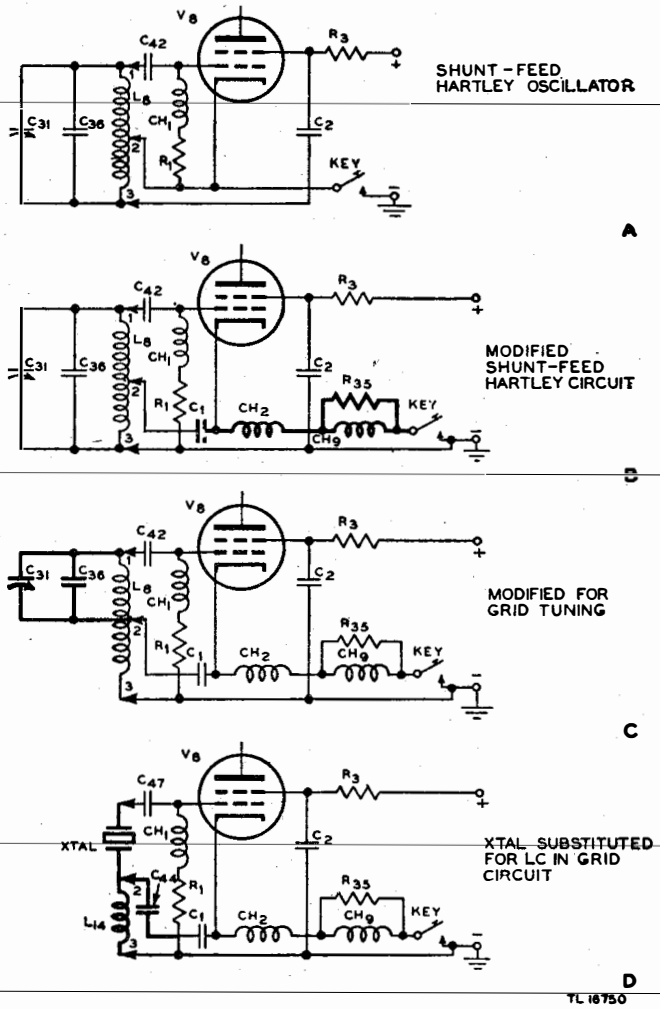

Figure 54. Equivalent circuits of master oscillator.

134. Crystal Control of Master Oscillator

a. Crystal Control with Tuning Unit TU–47. The modified Hartley circuit of figure 54(B) could be further modified as shown in figure 54(C). Under this condition, the cathode section (2–3) of, L_8 would not form a part of the resonant LC circuit. The frequency of oscillation would now be determined by the resonant circuit composed of the grid section (1–2) of L_8 and capacitors C_{36} and C_{31}. The resonant circuit (L_8, C_{36}, and C_{31}) is the equivalent circuit of a crystal at its resonant frequency. When the M.O.–XTAL switch of Tuning Unit TU–47 is placed in the XTAL position, the m-o circuit of figure 54(D) is in use. Examination of this circuit shows that—

(1) The crystal has been substituted for its equivalent circuit.

(2) Capacitor C_{44} has been placed in series with capacitor C_1.

(3) Inductor L_{14} has been substituted for L_8.

(4) The circuit functions the same as explained

in *a* and *b* above, except that L_{14} and C_{44} form a series resonant circuit between the cathode of V_8 and ground. The value of L_{14} and C_{44} are so chosen that their resonant frequency is somewhat lower than that of the lowest frequency crystal to be used in the circuit. This choice of values assures proper operation of the circuit without tuning to each of the available crystal frequencies, since the circuit will act as an inductive cathode load over the entire frequency range of which Tuning Unit TU–47 is designed. As in the modified circuit of figure 54(B), the r-f variations at the oscillator anode are fed back through inductor L_{14}, because of the high r-f impedance choke coils CH_2 and CH_9. The voltage thus developed across L_{14} exerts an electrical strain on the crystal so that it vibrates mechanically and develops the grid excitation voltage.

b. Other Tuning Units. With other tuning units, the operation of the master oscillator is the same as described for Tuning Unit TU–47. The values of the components in each tuning unit are chosen to give the best results in the frequency range for which the unit is designed.

c. Output of Oscillator Stage. The plate load circuit of the m-o stage is electron-coupled to the oscillator section of V_8. The output voltage is developed across r-f choke CH_3 (fig. 53) and coupled to the buffer-doubler stage through capacitor C_{13}.

d. D-c Supply Voltage. The d-c supply voltage for m-o stage V_8 is obtained from the exciter power supply. The plate voltage is regulated at 300 volts by means of the voltage regulator circuit composed of resistor R_2 and voltage regulator tubes V_{14} and V_{15} (Tubes JAN–OD3/VR–150). The oscillator anode voltage is regulated at 150 volts by means of the regulator circuit composed of resistor R_3 and voltage regulator tube V_{13} (Tube JAN–OD3/VR–150).

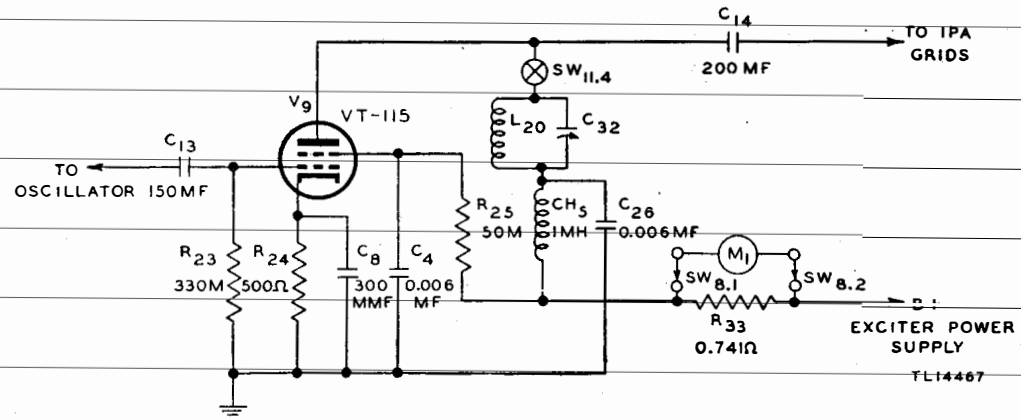

Figure 55. Functional diagram of buffer-doubler stage.

135. Buffer-Doubler Stage (fig. 55)

The r-f signal from the oscillator is fed through blocking capacitor C_{13} to the grid of tube V_9 (Tube JAN–6L6 (VT–115)), which is operated as a Class C amplifier. The operating grid bias is developed across grid leak R_{23} when excitation voltage is applied to the grid. When no excitation voltage is applied to the grid, a protective bias is provided by the cathode bias resistor R_{24} which is bypassed by capacitor C_8. This bias prevents excessive plate current through V_9 during the key-up periods of c-w transmission as well as when the grid is not properly excited because of oscillator failure. The plate-tank circuit consists of variable capacitor C_{32} and coil L_{20} in the tuning unit and it is connected to the plate of tube V_9 through contacts on switch SW_{11}. The plate-tank circuit is tuned by variable capacitor C_{32}, which is controlled from the tuning unit by a knob marked DOUB. Plate voltage is supplied by the exciter power supply, and is applied through coil L_{20}, r-f choke coil CH_5, and meter shunt resistor R_{33}. Choke CH_5 offers high impedance to r-f currents, and accordingly these currents flow to ground through bypass capacitor C_{26} which has negligible reactance at operating frequencies. The tube receives screen-grid voltage through screen-dropping resistor R_{25} and meter shunt resistor R_{33}. Bypass capacitor C_4 maintains the screen grid at r-f ground potential. When switch SW_8, the EXCITATION METER SWITCH, is set to DOUBLER PLATE, the EXCITATION METER M_1 indicates the sum of the plate and screen currents through tube V_9. When the master oscillator is used, the buffer-doubler stage operates as a frequency doubler for all frequencies up to 12 mc; for frequencies from 12 to 18 mc, the buffer-doubler stage operates as a quadrupler. When the crystal oscillator is used, this stage operates as a buffer amplifier in the 2–to 4–mc

range; as a frequency doubler in the 4– to 12–mc range; and as a quadrupler in the 12–to18–mc range. The r-f output from the buffer-doubler tank is coupled through capacitor C_{14} to tubes V_{10} and V_{11}.

136. Intermediate-Power-Amplifier Stage (fig. 56)

Tubes V_{10} and V_{11} (Tubes JAN–807 (VT–100)) are connected in parallel and operated as a Class C amplifier stage. The grid bias for Class C operation is furnished by the bias power supply and applied to the grids of tubes V_{10} and V_{11} through parasitic resistors R_{21} and R_{22}, r-f choke coil CH_7, resistor R_8, and meter shunt resistor R_{28}. A small amount of self bias is obtained as a result of rectified grid-current flow through resistor R_8. This feature improves the Class C operation. When switch SW_8 is set to INT. AMP. GRID, meter M_1 indicates the grid current for tubes V_{10} and V_{11}. Grid excitation voltage is obtained from tube V_9 through coupling capacitor C_{14}. The excitation voltage is applied to the grids of tubes V_{10} and V_{11} through parasitic resistors R_{21} and R_{22} which effectively prevent this stage from producing parasitic oscillations. The high r-f impedance of choke CH_7 confines the r-f excitation voltage to the grids of V_{10} and V_{11}, thus keeping r-f energy out of the bias power-supply circuits and insuring maximum grid excitation voltage. The plate-tank circuit consists of variable capacitor C_{34} and coil L_{26}, in the tuning unit, and it is connected to the plates of tubes V_{10} and V_{11} through the contacts on switch SW_{11}. The plate-tank coil is tuned to resonance by variable capacitor C_{34}, which is controlled by the knob marked INT AMP on the tuning unit. Plate voltage is supplied by the exciter power supply and is applied to the plates of tubes V_{10} and V_{11} through coil L_{26}, r-f choke coil CH_6, and meter shunt resistor R_{27}. R-f energy is kept out of the power-supply circuit by the action of choke CH_6 and bypass capacitor C_{24}. The screen grids obtain voltage through screen-dropping resistors R_6 and R_7 and meter shunt resistor R_{27}. Capacitors C_6 and C_7 are the screen grid r-f bypass capacitors. When switch SW_8 is set to INT. AMP. PLATE, meter M_1 indicates the total plate and screen current for tubes V_{10} and V_{11}.

137. Power-Amplifier Stage (fig. 57)

The r-f output of the intermediate power amplifier is coupled through capacitor C_{15} to the grid of power-amplifier tube V_{16}. Tube V_{16} (Tube JAN–250–TH (VT–220)) is operated as a Class C, plate-neutralized, power amplifier. The grid bias required for this class of operation is furnished by the bias power supply. It is applied to the grid of tube V_{16} through r-f choke coil CH_8 and meter shunt resistor R_{26}. Choke CH_8 confines the r-f excitation voltage to the grid and keeps r-f energy out of bias power-supply circuit. When switch SW_8 is set to P. A. GRID, meter M_1 indicates the p-a grid current,

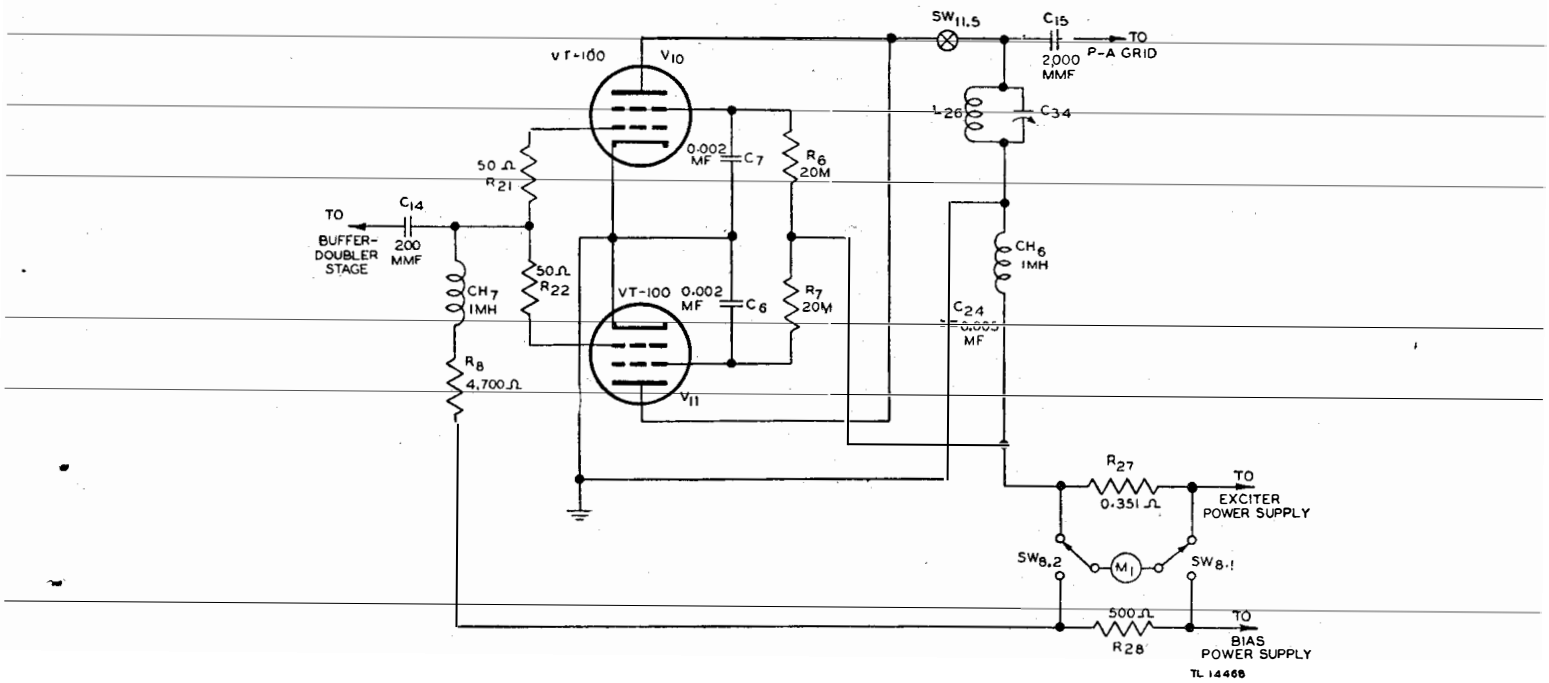

Figure 56. I–p–a amplifier stage—functional diagram.

tube V_{16}. The plate-tank circuit consists of variable capacitor C_{12} and p-a tank coil L_7. The p-a tank circuit is tuned to resonance by the variable capacitor C_{12} which is controlled by the PLATE TUNING dial on the front of the transmitter. Plate voltage for tube V_{16} is furnished by the high-voltage power supply and is applied to the plate through P. A. PLATE meter M_2, r-f choke coil CH_4, and coil L_7. For phone operation the secondary winding of modulation transformer T_9 is also included in the plate-voltage circuit. Meter M_2 indicates the p-a plate current. Radio frequency energy is kept out of the plate power supply circuit by means of bypass capacitor C_{11}. The inductance of choke CH_4 together with its distributed capacitance forms a parallel-resonant circuit at a frequency between 2 and 4 mc. Accordingly resistor R_9 is placed in parallel with choke CH_4 to prevent a high oscillating current in the choke coil. An out-of-phase voltage is fed back to the grid of tube V_{16} through capacitors C_{18} and C_{29} to neutralize the effect of the interelectrode capacity existing between grid and plate in the p-a tube (plate neutralization). Capacitor C_{29} has a low reactance at the signal frequency and serves only as a d-c blocking capacitor to isolate the neutralizing capacitor C_{18} from the high d-c voltage of the p-a plate-tank circuit. Bypass capacitors C_9 and C_{10} maintain the filament circuit of tube V_{16} at r-f ground potential, and filament meter M_3 indicates the a-c voltage applied to the filament. R-f power is taken from the p-a tank circuit by means of a link inductively coupled to the tank coil, and power is fed to the antenna tuning unit through a short coaxial cable. When the transmitter is not in operation, contacts on relay RY_4 short circuit the coupling link and detune the transmitting antenna so that it does not absorb signal energy at the frequency to which the radio receiving equipment is tuned.

138. Antenna Tuning Unit (g. 58)

Antenna Tuning Unit BC–939–A is used to match the impedance of the transmitting antenna to that of the final p-a tube plate circuit. The tuning unit is so designed that the transmitter will operate satisfactorily with a five-section rod antenna or with a long wire auxiliary antenna over a frequency range of 2.0 to 18 mc. Figure 59 is a functional schematic drawing of the antenna tuning unit when it is connected to a five-section rod antenna and the antenna range switch SW_9 is set to 2–10MC. Since the antenna is electrically much shorter than a quarter-wavelength, it presents a highly capacitive load to the transmitter. This capacitive antenna can be tuned to resonance by the addition of a portion of inductance L_6, the low-frequency loading coil, which is made variable by a movable tap is controlled from the front panel of the tuning unit by a crank handle marked FREQUENCY 10MC—INCREASE—2MC. When the inductive reactance of coil L_6 is made equal to the capacitive reactance of the antenna, the load presented to the transmitter is purely resistive. Coupling coil L_5, which is link-coupled to the p-a tank coil, acts as an impedance-matching transformer so that the resistance of the antenna, as reflected back into the p-a tank circuit, presents the optimum plate-load resistance, as viewed from the plate of the p-a tube. Coil L_5 is made variable by a movable tap which is controlled by a knob marked COUPLING INCREASE. Figure 60 is a functional schematic of the tuning unit connected to a five-section rod

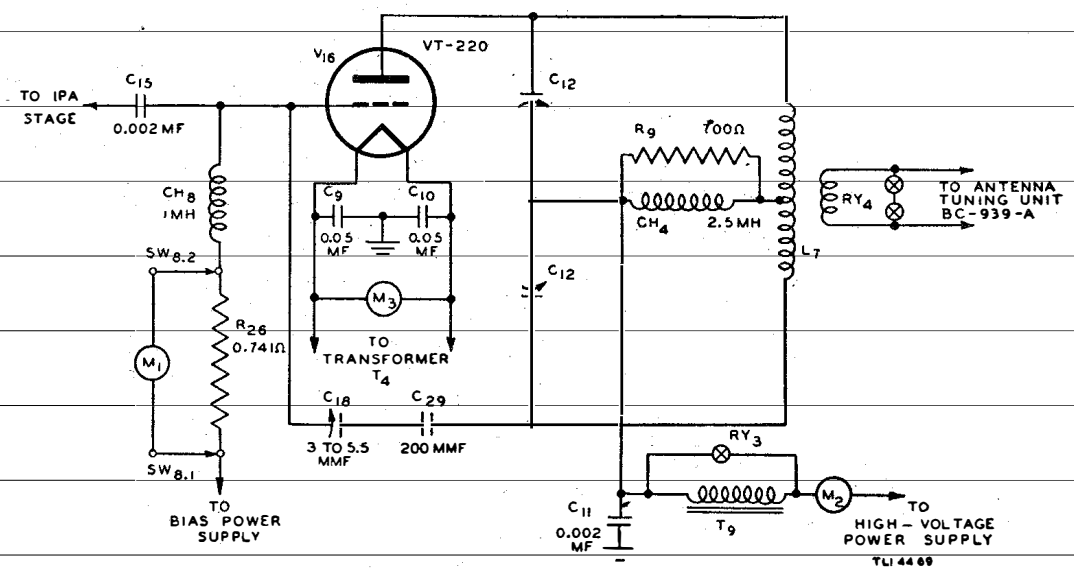

Figure 57. P–a stage—functional diagram.

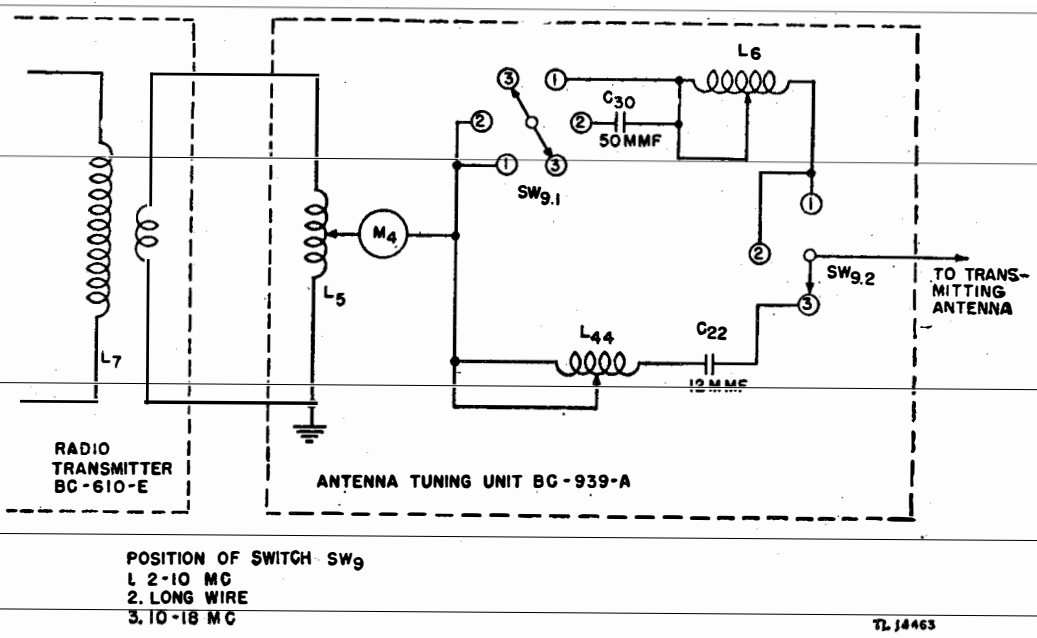

Figure 58. Antenna Tuning Unit BC-939-A—functional diagram.

antenna, with the antenna range switch SW_9 set to 10–18MC. From 10 to 12.5 mc the reactance of the antenna is capacitive; from 12.5 to 18 mc the reactance is inductive.

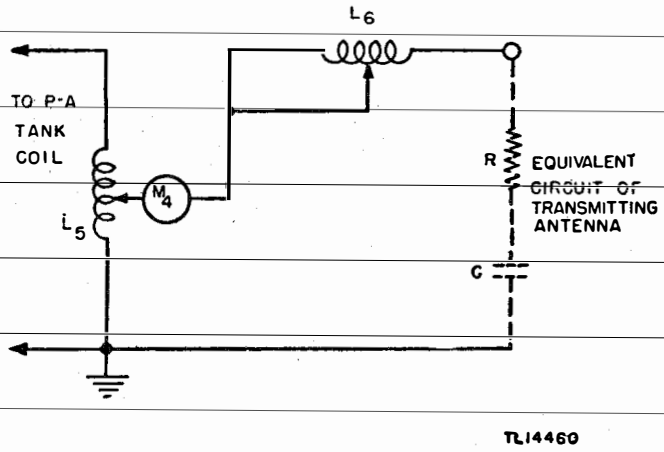

Figure 59. Antenna Tuning Unit BC-939-A—functional diagram with range switch in 2–10MC position.

At approximately 12.5 mc the antenna is purely resistive. The antenna is tuned to resonance by high-frequency loading coil L_{44} which is made variable by a movable tap, and is controlled by a crank marked FREQUENCY 18 MC—INCREASE —10MC. Vacuum capacitor C_{22} provides the added capacitance necessary when operating from 12.5 to 18 mc. Its effect is neutralized when operating from 10 to 12.5 mc by including more turns of coil L_{44} in the circuit. Figure 61 is a functional schematic diagram of the tuning unit connected to a long wire antenna, with the antenna range switch set to LONG WIRE.

The antenna may be either capacitive or inductive depending on the length of the wire and frequency used. The net reactance is made equal to zero by adjusting coil L_6, the low-frequency loading coil.

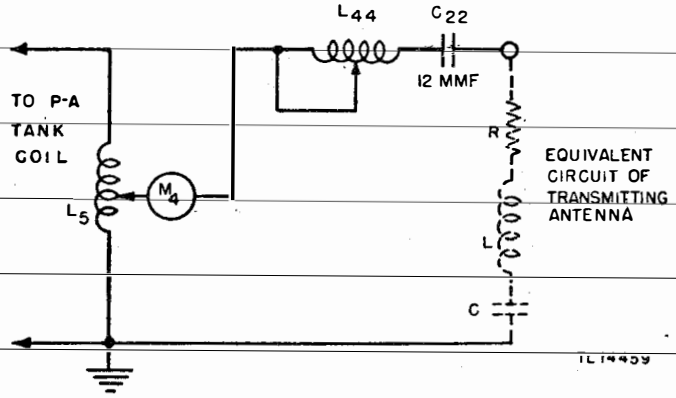

Figure 60. Antenna Tuning Unit BC-939-A—functional diagram with range switch in 10–18MC position.

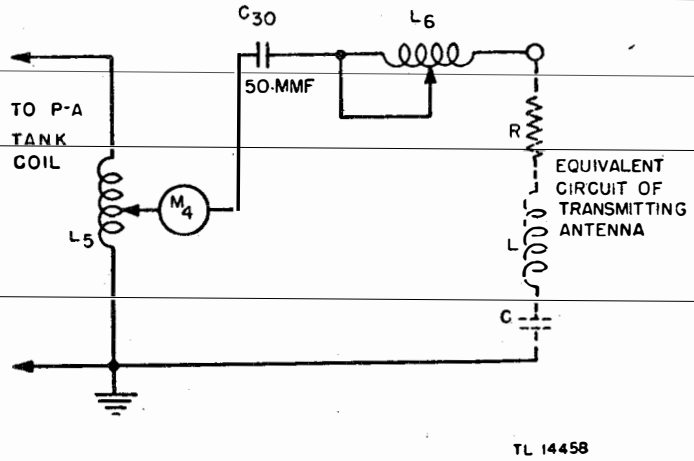

Figure 61. Antenna Tuning Unit BC-939-A—functional diagram with range switch in LONG WIRE position.

Vacuum capacitor C_{30} is included in the circuit to provide the necessary capacitance when the reactance of the antenna is inductive because of the length of the wire and the frequency used. ANTENNA CURRENT meter M_4 indicates the r-f current flowing in the series circuit which consists of the antenna and the antenna loading circuit. R-f current will be at maximum when the antenna is tuned to resonance with the transmitter frequency by means of the antenna loading circuits in the antenna tuning units.

139. Modulator Section

a. Driver Stage (fig. 62). Tubes V_1 and V_2 (Tubes JAN-2A3 (VT-95)) are operated as Class AB_1 a-f amplifiers connected in a push-pull circuit. The suffix 1 after AB denotes that grid current is not allowed to flow during any part of the input cycle. Plate voltage for tubes V_1 and V_2 is furnished by the bias-voltage power supply. This power supply has the positive side of the output voltage grounded, and therefore the ungrounded side of the output voltage is approximately 360 volts negative with respect to ground. The filaments of the driver tubes are connected through resistor R_{20} to 360 volts negative, and the plates are connected to ground through the center tap of driver transformer T_8. This places the plates at a potential of approximately 300 volts positive with respect to the filaments. Approximately 60 volts negative grid bias is obtained as a result of the voltage drop across resistor R_{20} because of the d-c plate-current flow. The grids are connected to the negative side of resistor R_{20} through the center tap on input transformer T_7. Resistor R_{20} is bypassed by capacitor C_{27} which has enough capacity to offer a very low reactance to all audio frequencies above approximately 50 cps (cycles per second). Its purpose is to keep the a-f voltage out of the bias power supply and to prevent degeneration of the a-f signal in self-biasing resistor R_{20}. A-f voltage is fed to the primary winding of transformer T_7 over a 500-ohm transmission line. The secondary winding of transformer T_7 is connected to the grids of tubes V_1 and V_2; the grid circuit is completed to the filaments through the center tap on transformer T_7 and resistor R_{20}. The primary-to-secondary turns ratio of transformer T_7 is such that when the secondary is loaded by resistor R_{14} and R_{15}, the impedance, looking into the primary winding, is 500 ohms. This is the correct impedance to properly terminate the a-f transmission line from the speech amplifier. The driver stage is coupled to the modulator stage by transformer T_8. The secondary winding of transformer T_8 is loaded by resistors R_{16} and R_{17} to provide a more constant plate-load impedance for the driver tubes.

b. Modulator Stage (fig. 62). Tubes V_3 and V_4 (Tubes JAN-100-TH (VT-218)) are operated as a Class B push-pull modulator stage. Class B operation requires that the tubes be biased near plate current cut-off. Under this condition, the

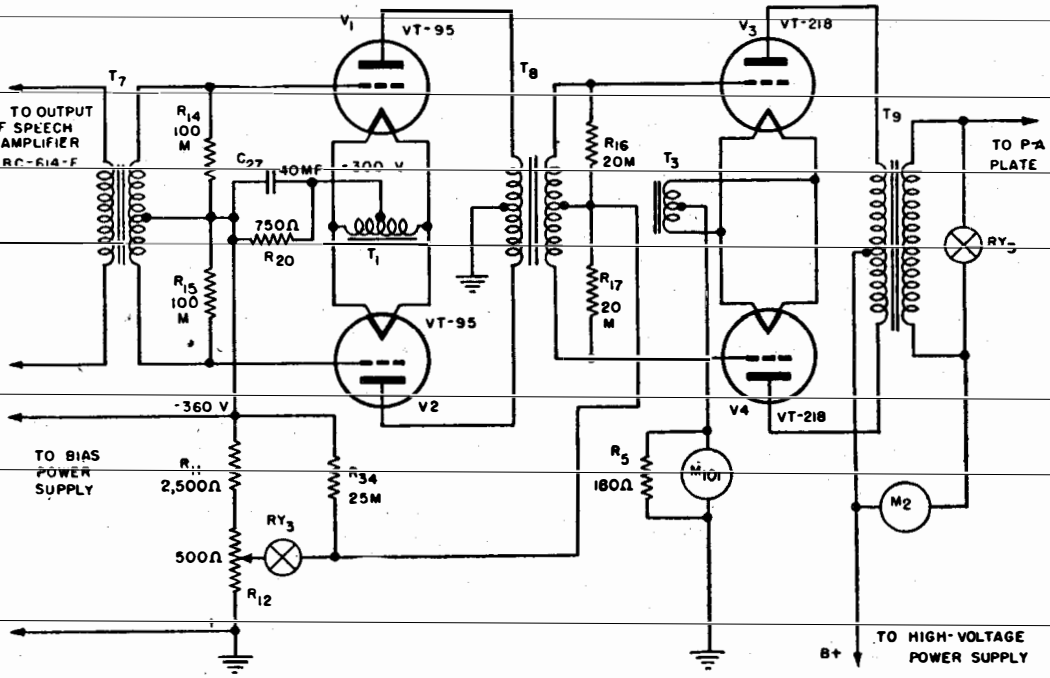

Figure 62. Driver and modulator stages—functional diagram.

plate current which flows when no signal is applied to the grids is relatively small; but when peak signal voltage is applied to the grids, the plate current may rise to several times the zero signal value. Grid bias for tubes V_3 and V_4 is furnished by the bias power supply, and during phone operations, is applied to the grids through contacts on relay RY_3 and the secondary center tap on transformer T_8. The bias voltage is set to the correct value by potentiometer R_{12}, the MODULATOR BIAS control on the front of the transmitter. During c-w operation, potentiometer R_{12} is disconnected by contacts on relay RY_3, and the total output voltage of the bias power supply is applied to the grids of tubes V_3 and V_4 through resistor R_{34}. This voltage is sufficient to cause plate current cut-off. Plate voltage for the modulator stage is furnished by the high-voltage power supply, and is applied to the plates through the center tap on modulation transformer T_9. The filaments of tubes V_3 and V_4 are connected to ground through resistor R_5 in parallel with MODULATOR PLATE meter M_{101}. Meter M_{101} is located in the speech amplifier and indicates the d-c plate current for tubes V_3 and V_4. If meter M_{101} or the circuit to the meter becomes open, resistor R_5 provides a protective bias for tubes V_3 and V_4, regardless of the setting of MODULATOR BIAS control R_{12}. In addition, it maintains the filament circuit of the modulator tubes and the wiring to the meter near ground potential. Under certain conditions, it may be necessary to apply plate power to the transmitter without having the speech amplifier and junction box connected. This can be done by setting PLATE POWER switch SW_6 to ON; resistor R_5 affords the protection described above. The a-f voltage developed across the secondary of transformer T_9 adds to and subtracts from the d-c plate voltage applied to the p-a tube. Because the r-f output voltage of a Class C amplifier is proportional to the applied plate voltage, the r-f carrier is amplitude modulated by the a-f voltage developed in the modulator stage. Transformer T_9 is, in effect, loaded by a resistor whose value is equal to the d-c plate resistance of the p-a tube. Because of the impedance-transforming properties of transformer T_9, the resistance which is reflected into the primary circuit is the optimum plate-load impedance for modulator tubes V_3 and V_4. During c-w operation, the secondary winding of transformer T_9 is short-circuited by a pair of contacts on relay RY_3.

140. Power Supplies

a. Exciter Power Supply (fig. 63). The exciter power supply furnishes plate and screen-grid voltage for oscillator tube V_8, buffer-doubler tube V_9 and intermediate-amplifier tubes V_{10} and V_{11}. Fila-

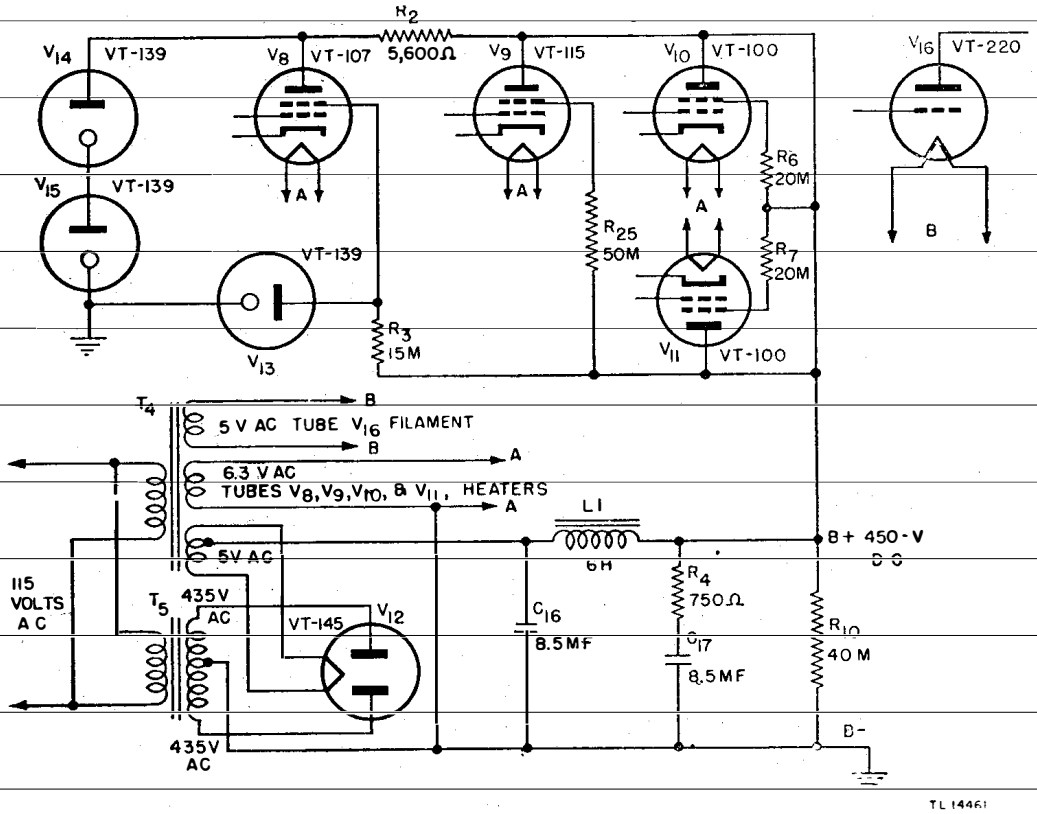

Figure 63. Exciter power supply—functional diagram.

ment transformer T_4 has three low-voltage secondary windings. They are: (1) 5.0-volt, 10.5-ampere, (2) 6.3-volt, 3.5-ampere, and (3) 5.0-volt, 3-ampere. The 5.0-volt, 10.5-ampere winding furnishes filament current for p-a tube V_{16}; the 6.3-volt, 3.5-ampere winding furnishes heater current for tubes V_8, V_9, V_{10}, and V_{11}; and the 5.0-volt, 3-ampere winding furnishes filament current for rectifier tube V_{12}. Rectifier tube V_{12} (Tube JAN–5Z3 (VT–145)) is connected in a full-wave rectifier circuit. The a-c plate voltage for tube V_{12} is furnished by the high-voltage secondary winding on transformer T_5. The rectified output voltage of tube V_{12} is applied to a pi-section filter consisting of filter capacitors C_{17} and C_{16} and choke L_1. R_4 is in series with capacitor C_{17} to prevent key clicks due to excessive voltage surges when the transmitter is keyed. Resistor R_{10} is the power-supply bleeder resistor which serves to discharge the filter capacitors when the power supply is turned off.

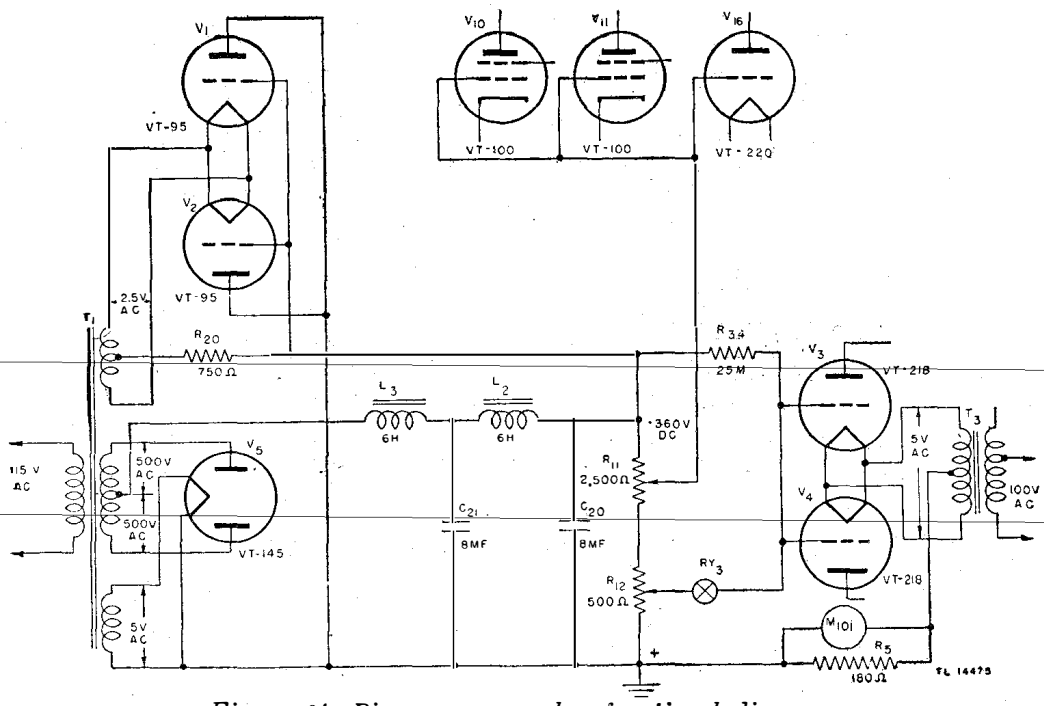

Figure 64. Bias power supply—functional diagram.

b. Bias Power Supply (fig. 64). The bias power supply furnishes filament and plate voltage for tubes V_1 and V_2, and bias voltage for tubes V_{10}, V_{11}, V_{16}, V_3 and V_4. Transformer T_1 supplies filament and plate voltage to rectifier tube V_5 (Tube JAN–5Z3 (VT–145)) which is connected as a full-wave rectifier. The rectifier output voltage is applied to a choke input pi-section filter consisting of filter chokes L_2 and L_3, and capacitors C_{20} and C_{21}. Resistor R_{11} and potentiometer R_{12} connected across the output of the power supply serve as bleeder resistors. The voltage regulation of this power supply is relatively good because of the use of a choke input filter and a high value of bleeder current. An adjustable tap is provided on resistor R_{11} for the purpose of adjusting the bias voltage to tubes V_{10}, V_{11}, and V_{16} to the correct value. Filament current for modulator tubes V_3 and V_4 is supplied by filament transformer T_3. The function of all other parts shown in figure 64 has been described in other paragraphs.

c. High-voltage Power Supply (fig. 65). The high-voltage power supply furnishes d-c plate voltage for modulator tubes V_3 and V_4, and p-a tube V_{16}. Tubes V_6 and V_7 (Tubes JAN–866A (VT–46A)) are connected in a full-wave rectifier circuit. Transformer T_2 furnishes filament current to the rectifier tubes; transformer T_6 furnishes the high a-c voltage to the rectifier plates. The rectified high voltage is applied to an L-section filter consisting of filter choke L_4, and filter capacitors C_{19} and C_{23} in parallel. Resistor R_{13}, the bleeder resistor, is connected across the output of the power supply and serves to discharge capacitors C_{19} and C_{23} when the power is turned off. Switch SW_7, the C.W.-PHONE switch, reduces the voltage applied to the plates of the rectifier tubes during phone operation. Switch SW_4 is the HIGH VOLTAGE PROTECT switch. When set to HIGH VOLTAGE PROTECT it connects resistor R_{19} (heater element) in series with one side of the primary of transformer T_6 to reduce the output voltage of the rectifier during tune-up

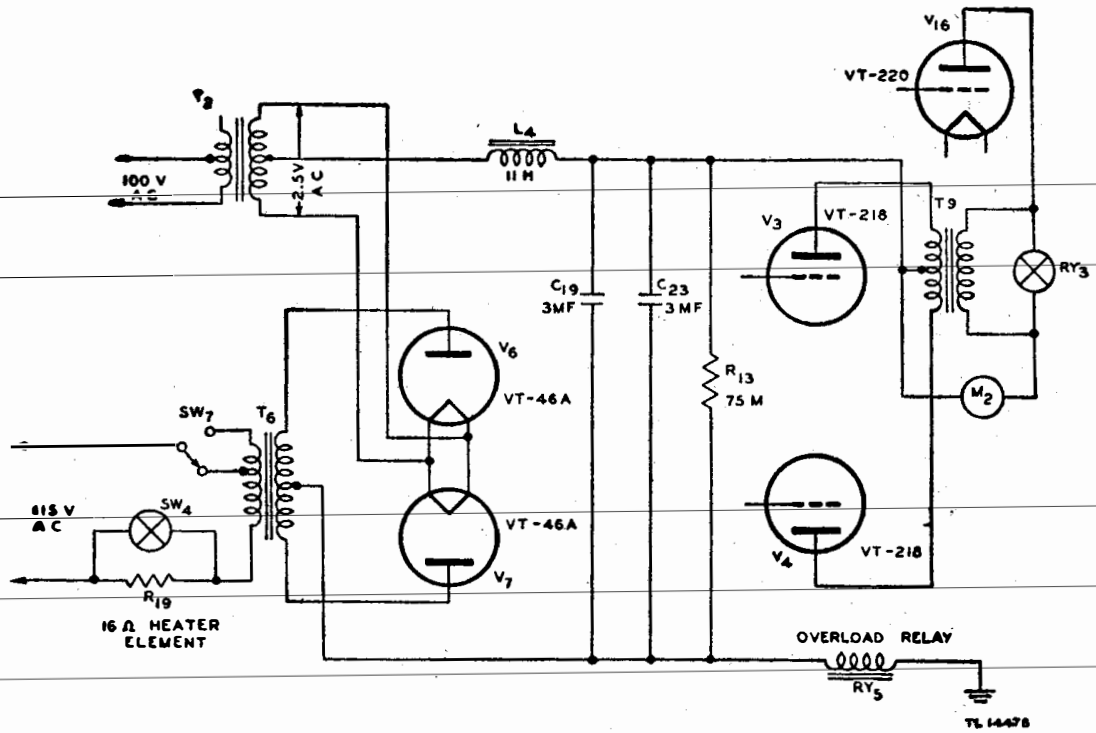

Figure 65. High-voltage power supply—functional diagram.

operations. During c-w operation, contacts on relay RY_3 short-circuit the secondary winding of modulation transformer T_9. The coil of relay RY_5 is connected between the center tap of the high-voltage secondary winding of transformer T_6 and ground. Its purpose is to actuate contacts which disconnect the primary voltage from transformer T_6 when excessive current flows through the relay coil. This prevents damage to the high-voltage rectifier tubes because of overloads.

141. Switches

a. Filament Power Switch SW_1 (fig. 66). FILAMENT POWER switch SW_1 is located on the front panel of the transmitter. When set to ON, it applies a-c power to the primary windings of transformers T_1, T_2, T_3, T_4, and T_{103}. Transformer T_{103} is the speech-amplifier power-supply transformer. It also applies a-c voltage to lamp LM_3 which lights the green jewel above the switch.

b. Exciter Plate Power Switch SW_3 (fig. 67). EXCITER PLATE POWER switch SW_3 is located on the front panel of the transmitter. When set to ON, one pair of contacts applies a-c power to the primary winding of transformer T_5, and another pair of contacts grounds the cathode circuit of oscillator tube V_8. This switch is used to apply plate power to the exciter stages during tune-up operations.

c. High Voltage Protect Switch SW_4 (fig. 68). HIGH VOLTAGE PROTECT switch SW_4 is located on the front panel of the transmitter. When set

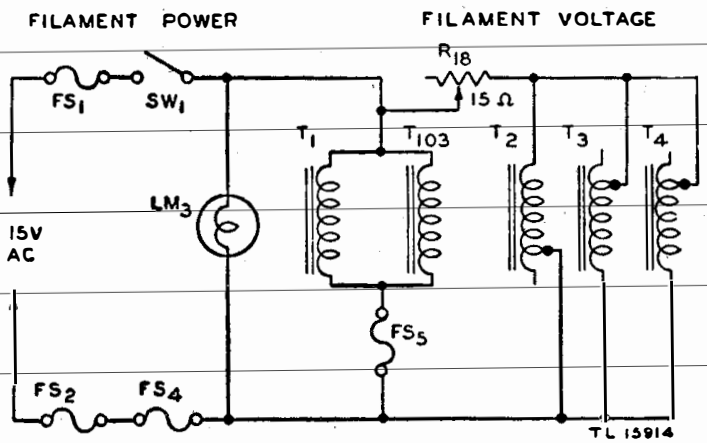

Figure 66. FILAMENT POWER switch—functional diagram.

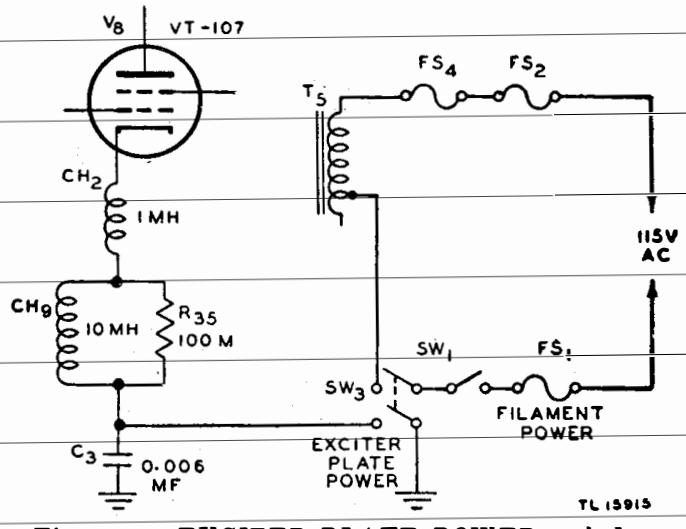

Figure 67. EXCITER PLATE POWER switch—functional diagram.

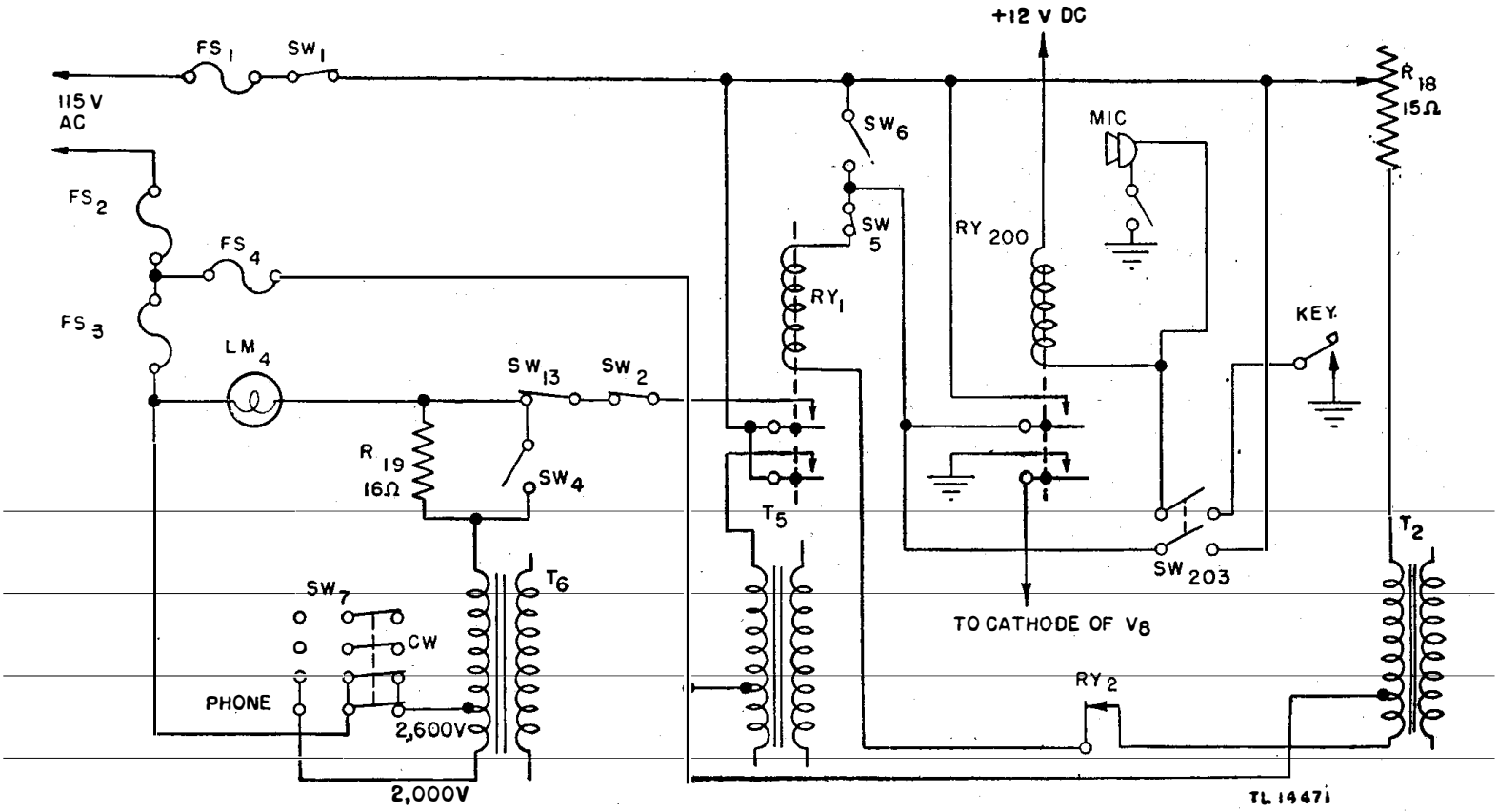

Figure 68. HIGH VOLTAGE PROTECT and PLATE POWER switches—functional diagram.

to HIGH VOLTAGE PROTECT, it connects resistor R_{19} in series with the primary winding of transformer T_6. Resistor R_{19} is a 16-ohm, 600-watt heater element and reduces the plate voltage applied to p-a tube V_{16} during tune-up operations. When switch SW_4 is set at OFF, it short-circuits resistor R_{19}, and thus applies full voltage to the plate of the p-a tube. Lamp LM_4 lights a red jewel above the switch when power is applied to high-voltage transformer T_6.

d. Plate Power Switch SW_6 (fig. 68). PLATE POWER switch SW_6 is located on the front panel

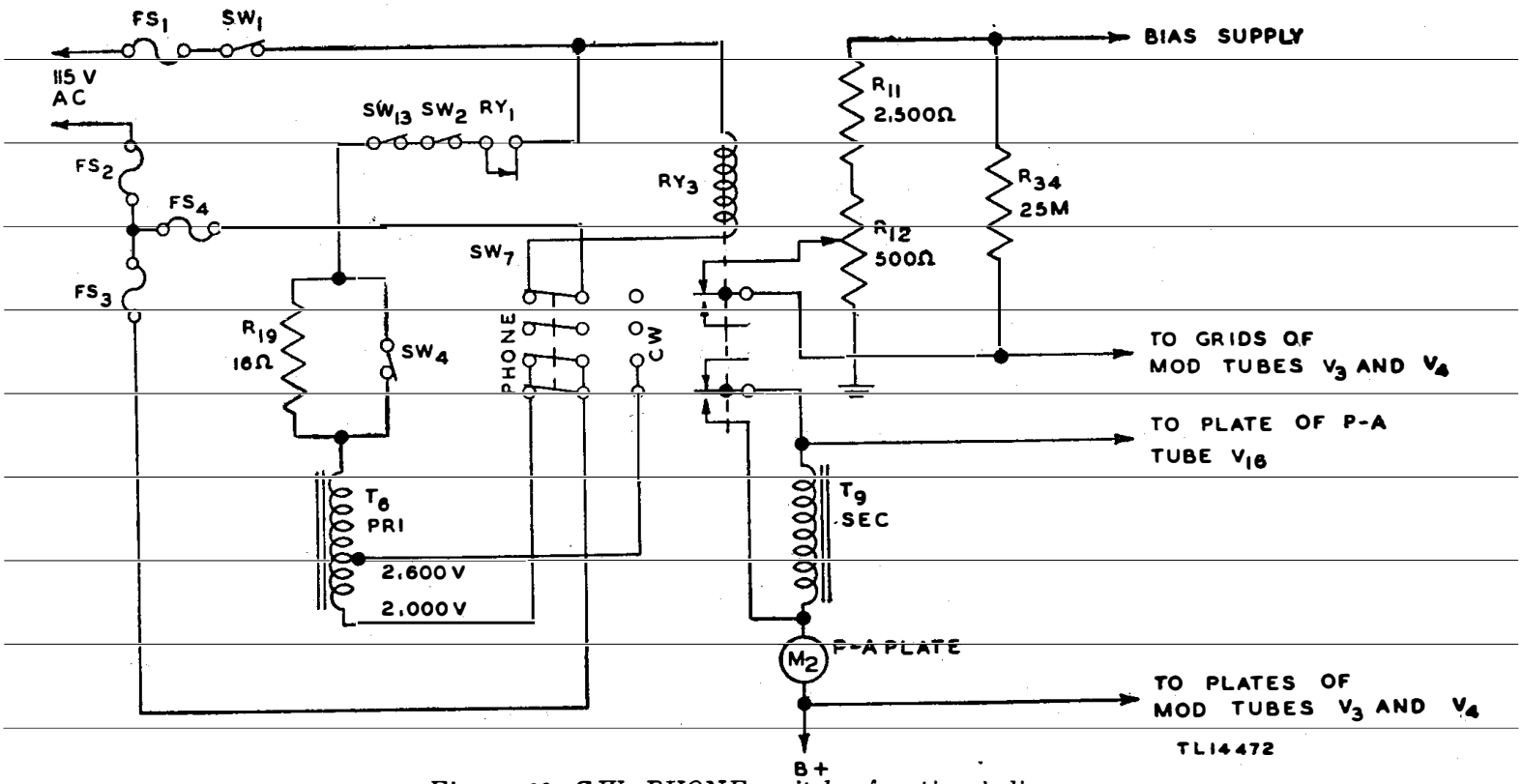

Figure 69. C.W. PHONE switch—functional diagram.

of the transmitter. When set to ON, it applies voltage to the coil of relay RY_1. A pair of contacts on relay RY_1 applies power to the primary winding of high-voltage transformer T_6.

e. C. W. PHONE SWITCH SW_7 (fig. 69). C. W. PHONE switch SW_7 is a four-pole, double-throw toggle switch located on the front panel of the transmitter. Its purpose is to select either c-w or phone operation. In the C. W. position, switch SW_7 applies a-c power to only a portion of the primary winding of transformer T_6. Thus full plate voltage is applied to the p-a tube. In the PHONE position, switch SW_7 applies a-c power to the whole primary winding of transformer T_6 and, as a result, reduced plate voltage is applied to p-a tube V_{16} and modulator tubes V_3 and V_4. Two poles of switch SW_7 are connected in parallel to carry the primary current required by transformer T_6. In the PHONE position, another pole on switch SW_7 applies voltage to the coil of relay RY_3. The contacts on relay RY_3 short-circuit the secondary winding of modulation transformer T_9, and these contacts remain closed until current flows through the coil of relay RY_3. One pole on switch SW_9 is not used.

Caution: Never throw this switch when the plate power is turned on. To do so will damage the switch, because the switch is not designed to break the primary current to high-voltage plate-power transformer T_6.

f. BAND SWITCH SW_{11} (fig. 70). Switch SW_{11} is a four-section, three-position switch, controlled from the front panel of the transmitter by a knob marked BAND SWITCH. Its purpose is to provide selection of any one of three tuning units which have been set to a predetermined frequency. The switch sections are numbered (on the functional schematic diagram) $SW_{11.1}$, $SW_{11.2}$, $SW_{11.3}$, and $SW_{11.4}$. Section 1 is the section nearest the front panel of the transmitter. Switches $SW_{11.1}$ and

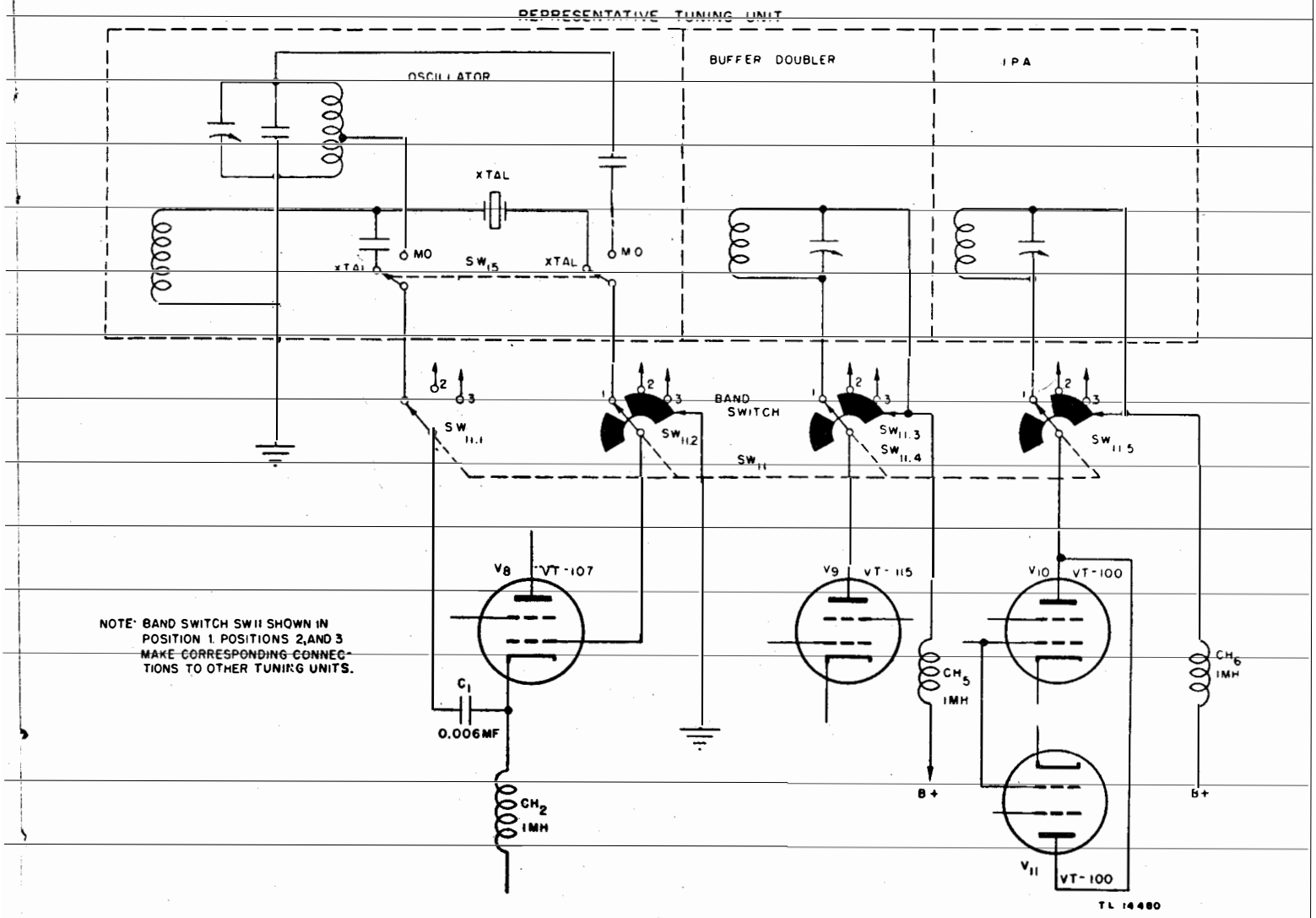

Figure 70. BAND SWITCH—functional diagram.

$SW_{11\cdot2}$ connect the grid and cathode circuits of oscillator tube V_8 to the oscillator circuits in the tuning unit. Switch $SW_{11\cdot3}$ connects the buffer-doubler tank coil of the tuning unit to the plate of buffer-doubler tube V_9. Switch $SW_{11\cdot4}$ connects the plates of the intermediate-amplifier tubes V_{10} and V_{11} to the intermediate tank coil of the tuning unit. To avoid undesirable resonant effects, coils of tuning units which are not in use are short-circuited by shorting plates on switch SW_{11}.

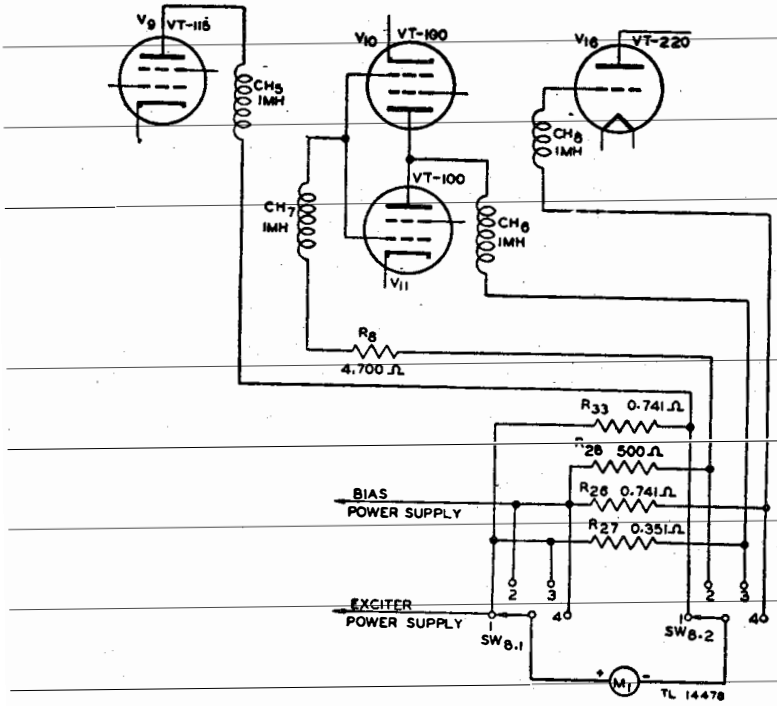

Figure 71. EXCITATION METER switch—functional diagram.

g. Excitation Meter Switch SW_8 (fig. 71). Switch SW_8 is a two-section, four-position switch located on the front panel of the transmitter. It is controlled by a knob marked EXCITATION METER SWITCH. When the switch is set to DOUBLER PLATE, meter M_1 is connected in the plate circuit of buffer-doubler tube V_9. When the switch is set to INT. AMP. GRID, meter M_1 is connected in the grid-return circuit of intermediate-amplifier tubes V_{10} and V_{11}. When the switch is set to INT. AMP. PLATE, meter M_1 is connected in the plate circuit of intermediate-amplifier tubes V_{10} and V_{11}. When the switch is set to P.A. GRID, meter M_1 is connected in the grid-return circuit of p-a tube V_{16}.

h. Overload Reset Switch SW_{12} (fig. 72). Switch SW_{12} is a momentary push-button type of switch located on the front panel of the transmitter. The switch is normally closed; but when pressed, it interrupts the energizing current through the coil of overload reset relay RY_2, which in turn operates

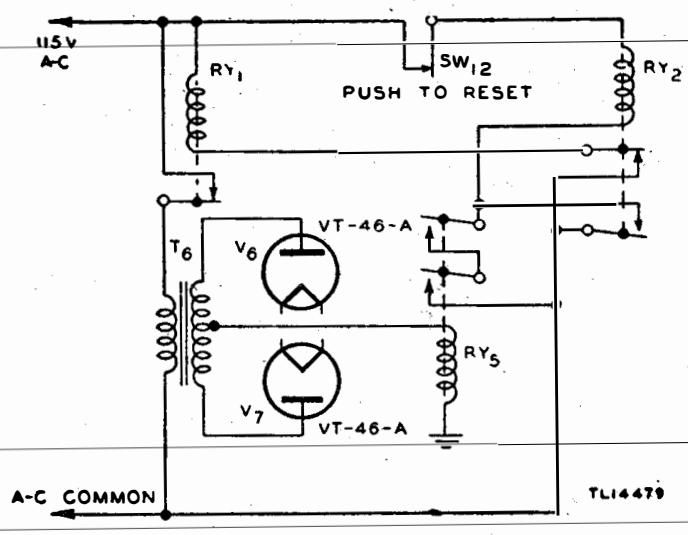

Figure 72. OVERLOAD RESET switch—functional diagram.

relay RY_1 to restore plate power to the transmitter.

i. Interlock Switches SW_2, SW_5, SW_{10}, and SW_{13} (fig. 73). Interlock switches are provided wherever opening a door or removing a cover of the transmitter exposes the operator to dangerously

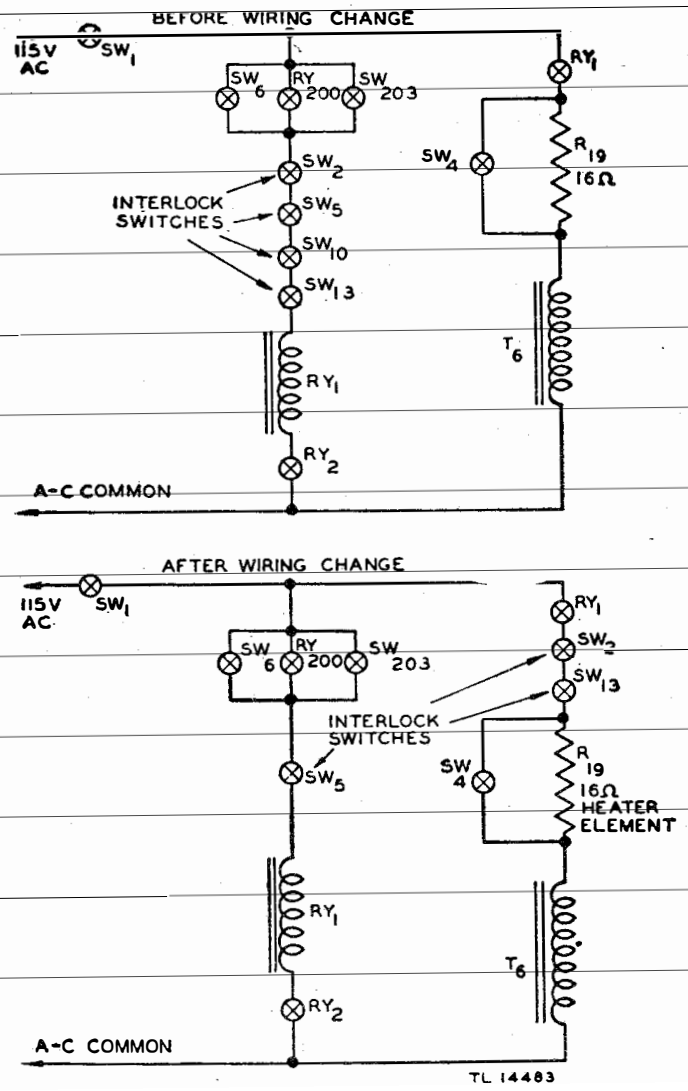

Figure 73. Interlock switches—functional diagram.

high voltages. Their purpose is to disconnect the a-c power from the primary winding of high-voltage power transformer T_6. On transmitters with serial numbers below 5191, switches SW_2, SW_5, SW_{10}, and SW_{13} are connected in series with the coil of relay RY_1. Beginning with serial number 5191, the interlock wiring has been changed; and switches SW_2 and SW_{13} are connected in series with the contacts of relay RY_1, providing positive protection even though the contacts on relay RY_1 should freeze closed. Interlock switch SW_{10} is not used on transmitters with serial numbers above 5191. Switch SW_2 is located on the under side of the left-hand top cover just above the r-f tank coil. Switch SW_5 is located on the rear apron of the modulator deck of the transmitter in such a manner that the switch opens when the rear cover of the transmitter is removed. Switch SW_{13} is located on the under side of the right-hand top cover and operates when the door over the tuning units is opened. On transmitters with serial numbers below 5191, switch SW_{10} is installed in such a manner as to disconnect the a-c power from transformer T_6 when the entire top section of the transmitter is removed.

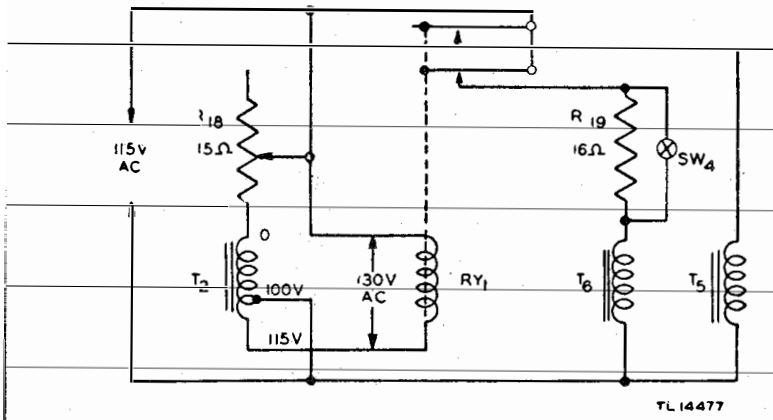

Figure 74. Plate power relay RY_1—functional diagram.

142. Relays

a. Plate Power Relay RY_1 (fig. 74). Relay RY_1 is a double-pole, single-throw relay located on the modulator deck of the transmitter. Its purpose is to apply plate power to the transmitter. When the coil of relay RY_1 is energized, one pair of the relay contacts applies a-c power to the primary winding of the high-voltage power transformer T_6 and the other pair of contacts apply a-c power to the primary winding of the exciter power-supply transformer T_5.

b. Phone-continuous Wave Switching Relay RY_3 (fig. 75). Relay RY_3 is a double-pole, double-throw relay located on the modulator deck of the transmitter. This relay operates in conjunction

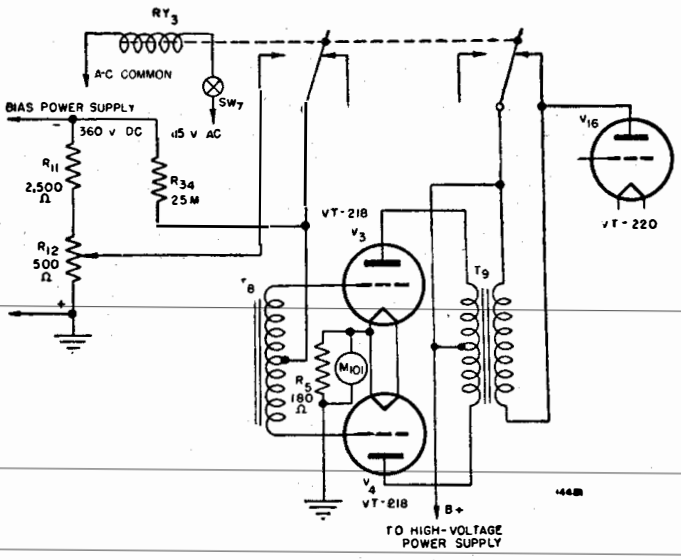

Figure 75. Phone-continuous wave switching relay RY_3—functional diagram.

with the C.W. PHONE switch SW_7 and its purpose is to select either c-w or phone operation. When switch SW_7 is set to C.W., no current flows through the coil of relay RY_3 and a closed pair of contacts short-circuit the secondary winding of modulation transformer T_9. When switch SW_7 is set to PHONE, the coil of the relay is energized and the closed contacts which short-circuit the secondary winding of transformer T_9 are drawn apart, removing the short circuit. At the same time, another pair of contacts on relay RY_3 close and these contacts apply the correct bias for Class B operation of modulator tubes V_3 and V_4 through potentiometer R_{12}.

c. Antenna Shorting Relay RY_4 (fig. 76). Relay RY_4 is a double-pole, double-throw relay located on the r-f deck of the transmitter near the p-a tank coil. Its purpose is to short-circuit the antenna-coupling coil of the p-a tank coil when the transmitter is not in operation. The coil of relay RY_4 is connected in parallel with the coil of relay RY_1; therefore both relays operate at the same time. When relay RY_4 is not energized, the contacts are connected in series across the antenna-coupling coil, shorting it out. When the relay is energized, the contacts are drawn apart, removing the short circuit from across the coupling coil.

d. Overload Protection Relays RY_2 and RY_5 (fig. 72). Relays RY_2 and RY_5 are located on the lower deck of the transmitter. They protect high-voltage rectifier tubes V_6 and V_7 from damage due to heavy current surges or serious overloads. All current drawn from the high-voltage power supply must pass through the coil of relay RY_5 and is designed to operate the contacts when the current through the coil exceeds approximately 750 ma.

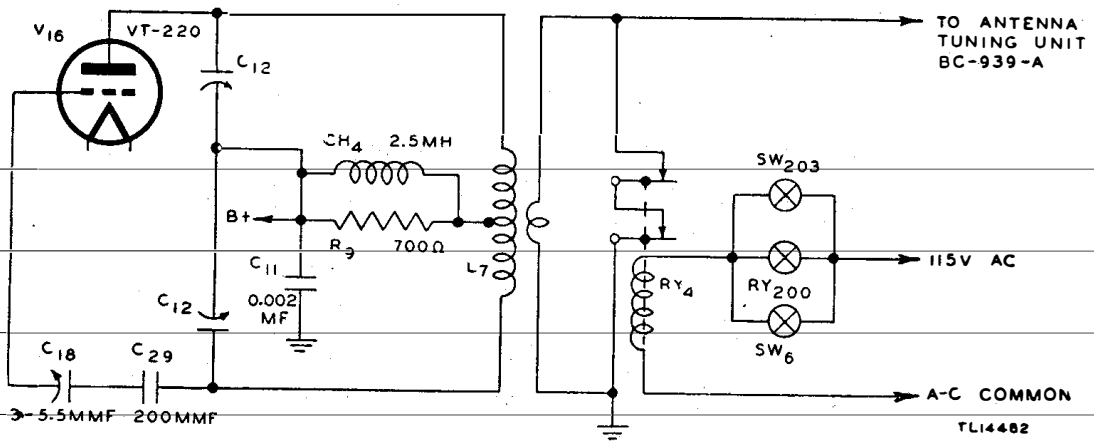

Figure 76. Antenna shorting relay RY_4—functional diagram.

When the contacts on relay RY_5 close, relay RY_2 is energized. One pair of contacts on relay RY_2 closes and maintains the energizing current; another pair of contacts opens the circuit to relay RY_1, which removes plate power from the transmitter. Relay RY_2 remains energized until the relay current is interrupted by pressing the OVERLOAD RESET switch SW_{12}. The armature then returns to its relaxed position and closes the pair of contacts which applies energizing current to relay RY_1 and thus restores the plate power to the transmitter.

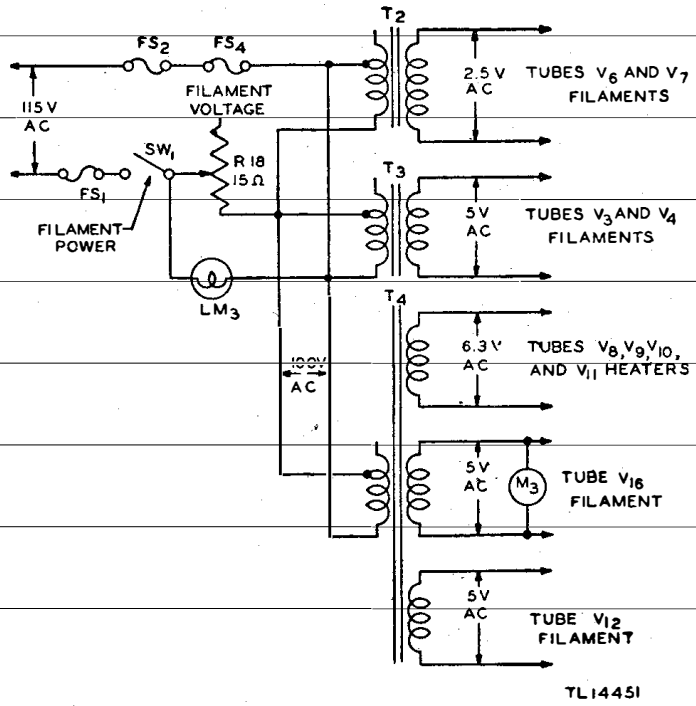

Figure 77. FILAMENT VOLTAGE control—functional diagram.

143. Controls and Meters

a. Filament Voltage Control Resistor R_{18} (fig. 77). FILAMENT VOLTAGE control resistor R_{18} is located on the lower front panel of the transmitter. It controls the filament voltage to tubes V_3, V_4, V_6, V_7, V_{12}, and V_{16} and the heater voltage to tubes V_8, V_9, V_{10}, and V_{11}. Resistor R_{18} is connected in series with the line voltage and the 100-volt taps on the primary windings of transformers T_2, T_3, and T_4. Correct filament voltage is obtained from secondary windings on these transformers by proper adjustment of the primary voltage.

b. Modulator Bias Control Resistor R_{12} (fig. 62). The MODULATOR BIAS control resistor R_{12} is located on the lower front panel of the transmitter. It adjusts the bias voltage to modulator tubes V_3 and V_4. Resistor R_{12} also serves in conjunction with resistor R_{11} as a bleeder resistor for the bias-voltage power supply.

c. Excitation Meter M_1 (fig. 71). The excitation meter indicates through a suitable switching arrangement, the buffer-doubler plate current, the intermediate-amplifier grid and plate currents, and the final p-a grid current. The excitation meter is a d-c milliameter having scales of 0 to 15 ma, 0 to 150 ma, and 0 to 300 ma. When the EXCITATION METER SWITCH SW_8 is set to DOUBLER PLATE, meter M_1 is connected across resistor R_{33}, which is in the plate circuit of buffer-doubler tube V_9. The meter indicates the buffer-doubler plate current on the 0- to 150-ma scale. Resistor R_{33} is the meter shunt resistor. When switch SW_8 is set to INT. AMP. GRID, meter M_1 is connected across resistor R_{28}, which is in the grid circuit of intermediate-amplifier tubes V_{10} and V_{11}. The meter indicates the intermediate-amplifier grid current on the 0- to 15-ma scale. Resistor R_{28} is the meter shunt resistor. When switch SW_8 is set to INT. AMP. PLATE, meter M_1 is connected across resistor R_{27}, which is in the plate circuit of intermediate-amplifier tubes V_{10} and V_{11}. The meter indicates the intermediate-amplifier plate current on the 0- to 300-ma scale. Resistor R_{27} is the meter shunt resistor. When switch SW_8 is set to P. A. GRID, meter M_1 is connected across resistor R_{26} which is in the grid circuit of p-a tube V_{16}. The

meter indicates the p-a grid current on the 0- to 150-ma scale; resistor R_{26} is the meter shunt resistor.

d. P. A. PLATE METER M_2 (fig. 65). P. A. PLATE meter M_2 is a 0- to 500-ma, d-c milliameter located on the front panel of the transmitter. Its purpose is to indicate the d-c plate current of p-a tube V_{16}. The meter is connected in the high-voltage plate lead to tube V_{16}, and is isolated from the radio frequency in the tank coil by r-f choke coil CH_4 and bypass capacitor C_{11}.

e. FIL. VOLTAGE METER M_3 (fig. 66). Filament voltage meter M_3 is a 0- to 10-volt a-c voltmeter located on the front panel of the transmitter. It indicates the filament voltage to p-a tube V_{16}. The meter is connected directly across the filament winding of transformer T_4 which supplies filament current to p-a tube V_{16}. Since the primary windings of transformers T_2, T_3, and T_4 are connected in parallel and receive a-c primary current through the common variable resistor R_{18}, it necessarily follows that when resistor R_{18} is adjusted so that meter M_3 indicates the correct voltage across the filament winding of transformer T_4, the filament voltages supplied by transformers T_2 and T_3 will also be nearly correct.

Section III. THEORY OF SPEECH AMPLIFIER BC-614-E

144. First A-F Amplifier (fig. 78)

Tube V_{101} (Tube JAN-6SQ7 (VT-103)) is connected as a triode in a Class A resistance-coupled amplifier stage. Its purpose is to amplify the output of dynamic Microphone T-50 or remote Telephone EE-8-( ). The tube is self-biased as a result of the d-c voltage drop across the cathode-bias resistor R_{106}. Plate voltage is furnished by the power supply in the speech amplifier, and is applied to the plate of tube V_{101} through a decoupling resistor R_{128} and plate-load resistor R_{107}. Capacitor C_{113} is the a-f bypass capacitor for decoupling resistor R_{128}. The filter, consisting of resistor R_{128} and capacitor C_{113}, prevents feedback from succeeding stages because of coupling through the common impedance of the power supply. The network in the grid circuit, consisting of resistors R_{101}, R_{102}, R_{103}, R_{104}, and R_{105}, is designed to properly match the impedance of either dynamic Microphone T-50 or a telephone line, the far end of which is connected to a field Telephone EE-8-( ). Microphone T-50 requires high-impedance input; Telephone EE-8-( ) requires a low-impedance input. In addition to matching impedance, the network also provides the correct attenuation of the input a-f voltage when using Microphone T-50 or field Telephone EE-8-( ). This is a necessary function because the output voltage levels of Microphone T-50 and Telephone EE-8-( ) differ considerably. Solution of the resistance network, consisting of resistors R_{101}, R_{102}, R_{103}, R_{104}, and R_{105}, yields the equivalent circuits shown in figure 78(A) and (B). Figure 78(A) is an equivalent circuit of the 1st a-f amplifier stage when using Microphone T-50; figure 78(B) is an equivalent circuit when using remote Telephone EE-8-( ). In either case, the a-f voltage applied to the grid of tube V_{101} is, in effect, obtained from a tap on a voltage divider. When using Microphone T-5C, the microphone output voltage is attenuated approximately 15 decibels; when using remote Telephone EE-8-( ), the degree of attenuation is approximately 20 decibels. Capacitor C_{130} is an r-f bypass capacitor to prevent high-frequency interference from affecting the amplifier when the input is connected to a telephone line. The output voltage of tube V_{101} is developed across resistor R_{107} and is applied to the grid of the second a-f amplifier through audio-coupling capacitors C_{102} and C_{119}.

145. Second A-F Amplifier (fig. 79)

Tube V_{102} (Tube JAN-6J5 (VT-94)) is operated as a Class A resistance-coupled amplifier stage. Its purpose is to amplify the output of the first a-f amplifier tube V_{101} and to amplify the output of a carbon microphone when one is used. Bias voltage is provided partly by the modulation limiter and partly from the self-biasing action of resistor R_{112} in the cathode circuit. The action of the modulation limiter is described in paragraph 148. Plate voltage is applied through decoupling resistor R_{127} and plate-load resistor R_{113}. Capacitor C_{112} is the a-f bypass capacitor for decoupling resistor R_{113}. The decoupling filter consisting of resistor R_{127} and capacitor C_{112} performs the same function as the decoupling filter described in paragraph 144. When a dynamic microphone or field telephone is used, the output voltage of the first a-f stage is impressed on the grid of tube V_{102} through coupling capacitor C_{102}, resistor R_{108}, potentiometer R_{111} (gain control), and another coupling capacitor C_{119}. Capacitor C_{119} also serves as a d-c blocking capacitor for the bias voltage supplied by the modulation limiter. The purpose of resistor R_{108} is to provide a more constant plate-load impedance for tube V_{101} as the gain control R_{111} is varied. This improves the low-frequency response of the amplifier at low settings of gain control R_{111}. Gain control R_{111} controls the output of the speech amplifier when using a dynamic

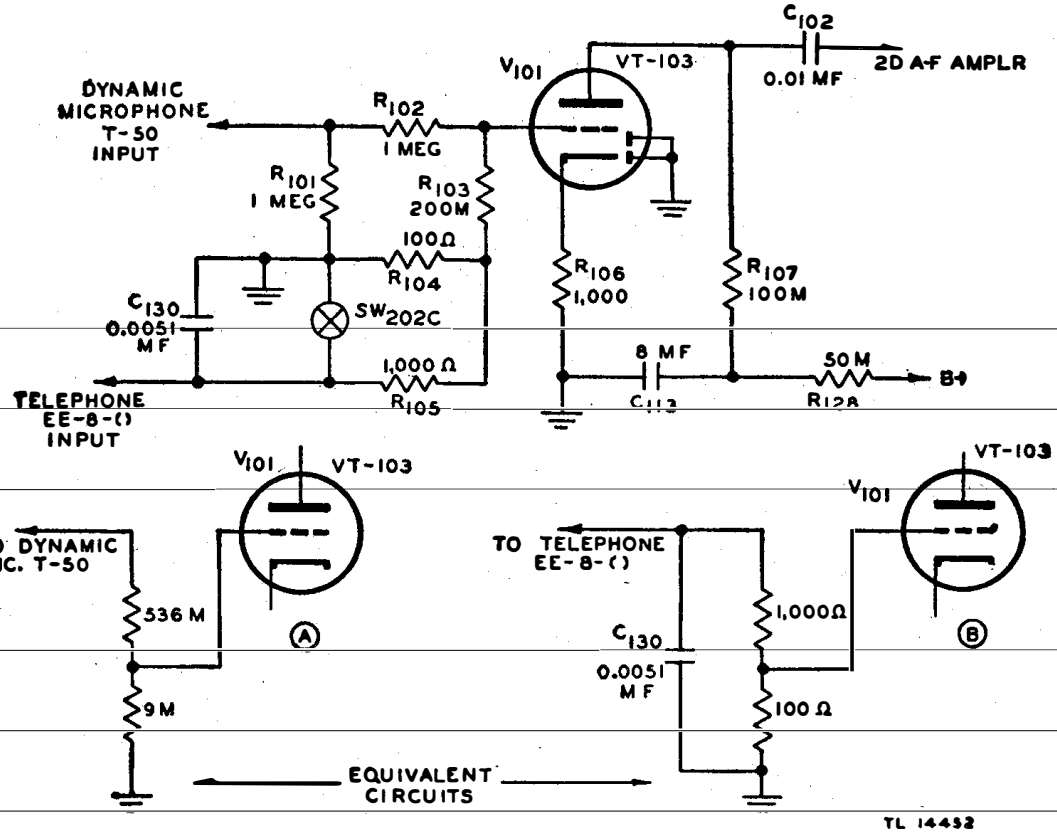

Figure 78. First a-f amplifier stage—functional diagram.

microphone or field telephone. When a carbon microphone is used, a-f voltage is developed across the secondary winding of transformer T_{101} and is applied to the grid of tube V_{102} through resistor R_{110} and potentiometer R_{123}. Potentiometer R_{123} controls the output of the speech amplifier when using a carbon microphone. Resistor R_{110} and potentiometer R_{123} serve as a terminating resistance for transformer T_{101}. In addition, resistor R_{110} isolates the secondary winding of transformer T_{101} from the grid circuit of tube V_{102}, and thus effectively prevents the winding from lowering the plate-load impedance for tube V_{101} in case the gain control for the carbon microphone is left open when using a dynamic microphone or field telephone. Current for the carbon microphone is obtained from the speech-amplifier power supply, and is applied to the microphone through resistor R_{124} and the primary winding of transformer T_{101}. Resistor R_{142} is connected in parallel with the carbon microphone. It limits the current through the microphone to approximately 25 ma. Resistor R_{124} and capacitors C_{120} and C_{110} form a pi-section filter which filters all a-c hum voltage from the current supplied to the microphone. Capacitor C_{129} is connected across the microphone and serves as a high-frequency bypass capacitor to reduce microphone hiss and r-f interference which may enter the amplifier by way of the microphone cord. The output voltage of tube V_{102} is developed across resistor R_{113} and is applied to the third a-f stage through audio-coupling capacitor C_{103}.

146. Third A-F Amplifier and Phase Inverter (fig. 80)

Tube V_{103} (Tube JAN–6SN7 (VT–231)) is connected in a self-balancing phase inverter circuit. The tube contains two triode sections in the same envelope. One section functions as a conventional resistance-coupled amplifier; the other section provides the 180° phase reversal required to excite the grids of the fourth a-f push-pull amplifier stage. The tube is self-biased as a result of the d-c voltage drop across cathode-bias resistor R_{115}. Capacitor C_{104} is the a-f bypass capacitor for resistor R_{115}. Plate voltage for each section of the tube is applied through decoupling resistor R_{126} and plate-load resistors R_{116} and R_{117} respectively. Capacitor C_{111} is the a-f bypass capacitor for decoupling resistor R_{126}. The a-f signal from tube V_{102} is applied to the grid of the amplifier section of twin triode tube V_{103} through coupling capacitor C_{103}. The output signal from the amplifier section of tube V_{103} is applied to grid 1 of tube V_{104} through capacitor C_{105}. This signal also appears across the series-resistance path consisting of resistors R_{118} and R_{120}. The portion of this signal appearing across resistor R_{120} provides grid excitation for the phase-inverter section

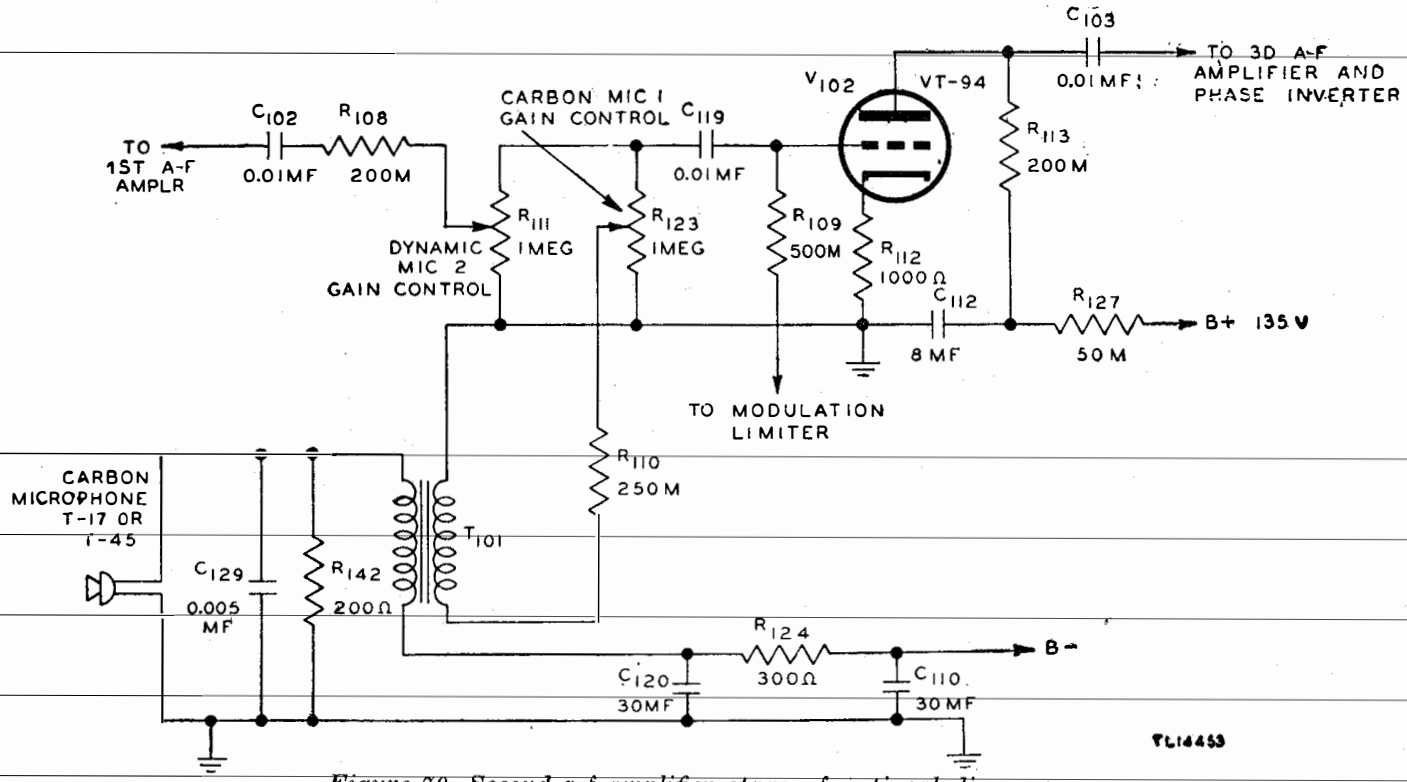

Figure 79. Second a-f amplifier stage—functional diagram.

of tube V_{103}. The plate circuit of this section of tube V_{103} provides, through capacitor C_{106}, a signal for grid 2 of tube V_{104} which is opposite in polarity at any instant to the signal applied to grid number 1 of tube V_{104}. This signal voltage also appears across resistors R_{119} and R_{120}. Resistors R_{118} and R_{119} are equal in resistance value. As the signal applied to grid 1 of tube V_{104} becomes greater than the signal applied to grid 2, the polarity, at any instant, of the voltage developed across resistor R_{120} is such as to cause greater instantaneous output from the phase inverter section of tube V_{103}. The two grids of tube V_{104} are therefore excited almost equally, and the voltage drop across resistor R_{120}, caused by the signal applied to grid 1 of tube V_{104}, is almost cancelled by a voltage of opposite polarity and nearly equal amplitude caused by the signal applied to grid 2 of tube V_{104}. The remaining uncancelled voltage across resistor R_{120} corresponds to the unbalance between the signals applied to the two grids of tube V_{104}. This unbalanced voltage then excites the grid of the phase-inverter section of tube V_{103} so that the output of the phase inverter tends to reduce the unbalance. The high gain of tube V_{103} results in a very small percentage of unbalance, even with considerable variations in the two sections of tube V_{103} and variations in circuit constants.

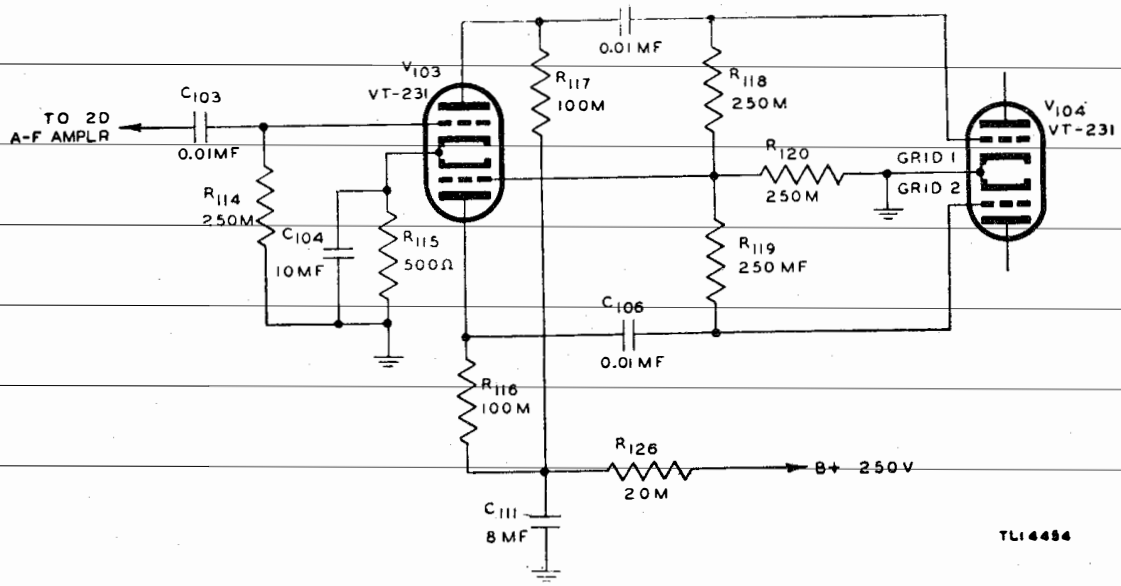

Figure 80. Third a-f amplifier and phase inverter—functional diagram.

147. Fourth A-F Amplifier (fig. 81)

Tube V_{104} (Tube JAN–6SN7 (VT–231)) is connected in a Class A push-pull amplifier stage. Its purpose is to amplify the output of the third a-f amplifier stage sufficiently to excite the grids of the push-pull driver stage located in the transmitter. The tube is self-biased as a result of the d-c voltage drop across cathode-bias resistor R_{121} which is bypassed for audio frequencies by capacitor C_{107}. Plate voltage is obtained from the speech-amplifier

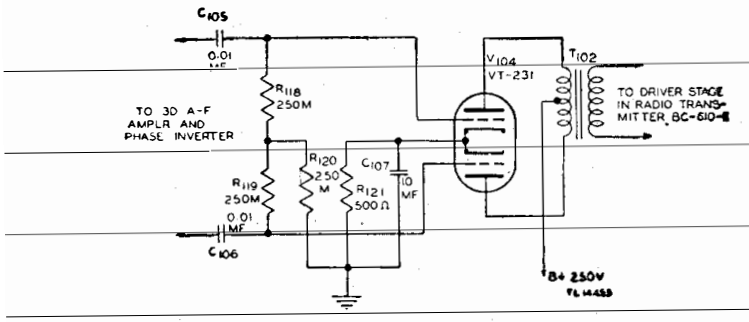

Figure 81. Fourth a-f amplifier stage—functional diagram.

power supply, and is applied to the plates of the tube through the center tap on the push-pull output transformer T_{102}. Transformer T_{102} is designed to match the plate-to-plate impedance of tube V_{104} to a 500-ohm transmission line. Grid excitation for tube V_{104} is provided by the third a-f amplifier and phase inverter. The a-f output voltage appearing across the secondary winding of the output transformer is fed to the driver stage in the transmitter over a 500-ohm transmission line.

148. Modulation Limiter (fig. 82)

Tube V_{105} (Tube JAN–6SR7 (VT–233)) is connected in a modulation limiter circuit. Its purpose is to produce a d-c control voltage which is proportional to the peak amplitude of the speech-amplifier output voltage. This d-c control voltage is then used to bias the second a-f amplifier tube; its effect is to vary the gain of the second a-f amplifier tube V_{102} in inverse proportion to the amplitude of the output voltage of the speech amplifier. Tube V_{105} performs two functions: The triode section of the tube functions as an a-f amplifier, and the two diodes are connected in a full-wave rectifier circuit. The tube is self-biased as a result of the d-c voltage across cathode-bias resistor R_{131} and plate voltage is applied through decoupling resistor R_{129} and plate-load resistor R_{130}. Capacitor C_{115} is the a-f bypass capacitor for resistor R_{129}. Excitation voltage for the grid of tube V_{105} is obtained from one of the grids of tube V_{104} through potentiometer R_{134}, the modulation LIMITER CONTROL. The a-f output voltage of tube V_{105} appears across resistor R_{130} and is applied to the primary winding of transformer T_{104} through audio-coupling capacitor C_{114}. The a-f voltage appearing across the secondary winding of transformer T_{104} is applied to the two diodes of tube V_{105} and the diodes are returned to ground through the center tap of the secondary winding and diode load resistor R_{133}. The rectified a-f voltage which appears across resistor R_{133} is filtered by an RC (resistance-capacitance) network consisting of resistor R_{132} and capacitor C_{116}. The d-c voltage appearing across capacitor C_{116} is ap-

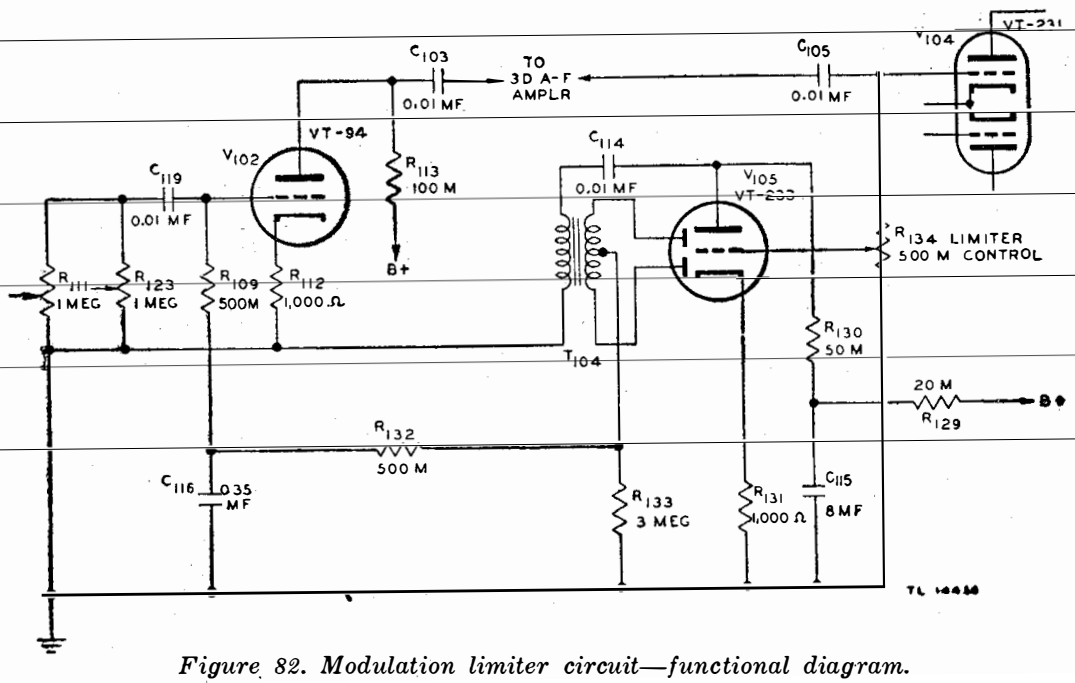

Figure 82. Modulation limiter circuit—functional diagram.

proximately equal to the peak amplitude of the signal applied to the diodes of tube V_{105}, and this d-c voltage is applied to the grid of tube V_{102} through resistor R_{109}. Tube V_{102} is operated on the curved portion of its mutual characteristic curve. Under this condition the transconductance of the tube varies rapidly with variations in grid bias; that is, an increase in grid bias decreases the transconductance, and vice versa. When the LIMITER CONTROL (potentiometer R_{134}) has been properly adjusted, the modulation limiter provides a minimum of 3 decibels compression at 100 percent modulation; this has the effect of raising the average modulation level approximately 7 decibels without exceeding 100 percent modulation on voice peaks. For the adjustment procedure for the LIMITER CONTROL see paragraph 197.

149. C-W Sidetone

a. SIDETONE OSCILLATOR (fig. 83). Tube V_{106} (Tube JAN-6SN7 (VT-231)) is connected in a multivibrator circuit. Its purpose is to generate a sidetone signal for monitoring the c-w transmission. When the transmitter is keyed, the cathode circuit of tube V_{106} is completed to ground through the contacts on switch SW_{206B} and relay RY_{200}. The multivibrator circuit is essentially a two-stage, resistance-coupled amplifier in which the voltage developed by the output of the second tube is fed back to the input of the first tube. Tube V_{106} is a dual triode tube and is self-biased as a result of the d-c voltage drop across the cathode-bias resistor R_{136}. Capacitor C_{128} is the a-f bypass capacitor for resistor R_{136}. Plate current flow through the left-hand triode of tube V_{106} causes a voltage drop across plate-load resistor R_{139}. This voltage drop is applied to the grid of the right-hand triode through capacitor C_{118}. This change of grid voltage produces a corresponding change of plate current and voltage drop across plate-load resistor R_{140}. The voltage drop across resistor R_{140} is then applied to the grid of the left-hand triode through capacitor C_{117}. Resistor R_{135} is the grid resistor for one triode section; resistor R_{138} in series with potentiometer R_{137} forms the grid resistor for the other triode section. The frequency oscillation is determined by the values of coupling capacitors C_{117} and C_{118} and the grid resistors. The audio output of the sidetone oscillator appears across potentiometer R_{137}.

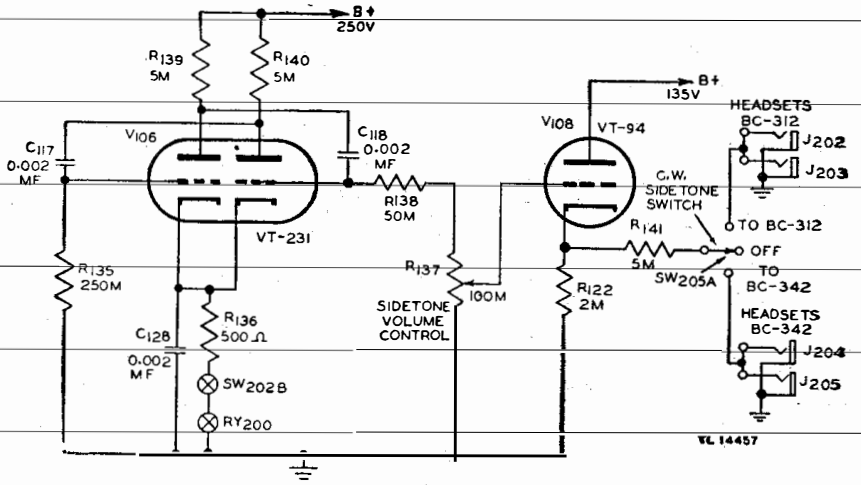

Figure 83. Sidetone oscillator circuit—functional diagram.

b. SIDETONE AMPLIFIER (fig. 83). Tube V_{108} (Tube JAN-6J5 (VT-94)) is connected as a cathode-follower amplifier. Its purpose is to isolate the headphones from the sidetone oscillator and to provide a low-impedance output to which the headphones are connected. This stage, strictly speaking, is not an amplifier because theroetically the gain of the stage can never exceed unity and practically the gain of a cathode-follower stage is in the range of 0.6 to 0.8. In this type of amplifier, the plate of the tube is connected directly to B+; and the cathode-bias resistor serves as the load resistor. Resistor R_{122} is the cathode-bias resistor for tube V_{108} and also acts as the load resistor. Grid excitation voltage for tube V_{108} is obtained from the movable contact on potentiometer R_{137} which also serves as the d-c grid return to ground. Potentiometer R_{137} controls the volume level of the sidetone signal applied to the grid of tube V_{108}; resistor R_{138} limits the maximum signal that can be applied to approximately two-thirds the available output of the sidetone oscillator. The output voltage appearing across R_{122} is applied to the headphones through resistor R_{141}. The output impedance of tube V_{108}

is approximately 300 ohms; accordingly, resistor R_{141} is connected in series with the cathode of tube V_{108} and the headphones to provide a better impedance match.

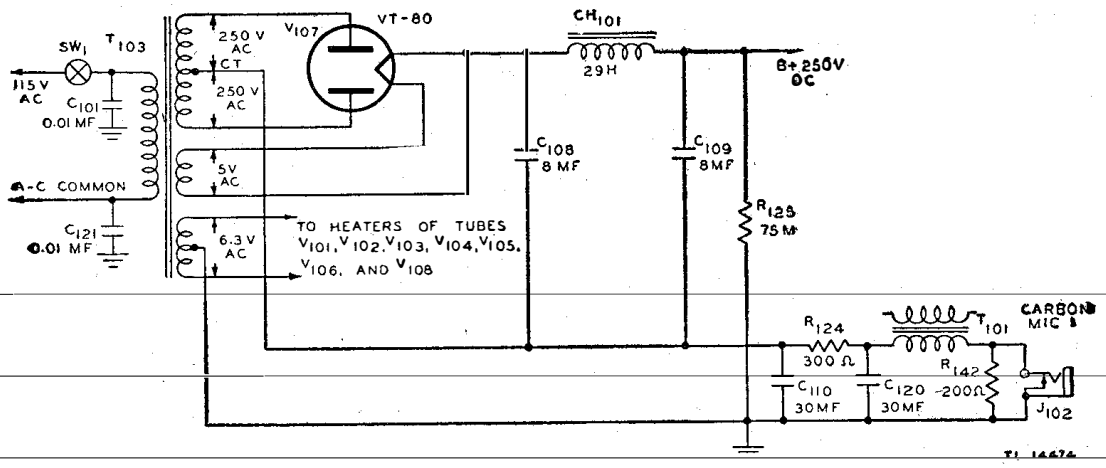

Figure 84. Power supply—functional diagram.

150. Power Supply (fig. 84)

Plate and filament voltage for the tubes in the speech amplifier, and microphone current for a carbon microphone is supplied by the speech-amplifier power supply. Transformer T_{103} furnishes all tubes with a-c filament voltage, and in addition it supplies the a-c plate voltage for rectifier tube V_{107}. Tube V_{107} (Tube JAN-80 (VT-80)) is connected in a full-wave rectifier circuit. The rectified output voltage is applied to a pi-section filter consisting of filter choke coil CH_{101} and filter capacitors C_{108} and C_{109}. Resistor R_{125} is the bleeder resistor for the speech-amplifier power supply. The primary leads to transformer T_{103} are bypassed for radio frequency by capacitors C_{101} and C_{121}. Lamp LM_{101} is connected across the 6.3-volt winding of the power transformer. It lights a red jewel on the front of the speech amplifier when the power is turned on by means of the FILAMENT POWER switch located on the front panel of the transmitter.

151. Jacks, Controls, and Meters

a. Microphone T-17 or T-45 (fig. 85). The control and jack marked CARBON MIC. 1, located on the upper left-hand side of the front panel of the speech amplifier, are for use with carbon Microphones T-17 or T-45. The cords of these microphones are equipped with Plugs PL-68. Jack J_{102} is a two-circuit jack which accommodates a Plug PL-68. One pair of contacts on jack J_{102} is normally closed; these contacts short circuit resistor R_{142}. When a microphone is plugged into jack J_{102}, the closed contacts open and connect the microphone in series with the primary winding of transformer T_{101} and the microphone current supply. Another contact on jack J_{102} completes a 12-volt d-c circuit through relay RY_{200} (located in Junction Box JB-70-A) and the microphone switch. The CARBON MIC. 1 control (resistor R_{123}) functions as a gain control for the speech amplifier when using a carbon microphone. (See fig. 79.)

b. Dynamic Microphone T-50 (fig. 86). The control and socket marked DYNAMIC MIC. 2, located on the upper left-hand side of the front panel of the speech amplifier, are for use with a dynamic Microphone T-50. The cord for the dynamic microphone is equipped with an amphenol connector which fits into sockets SO_{101}. When a dynamic microphone is connected to socket SO_{101}, the a-f signal from the microphone is applied to the amplifier through pins 1 and 3. The microphone switch completes a 12-volt d-c circuit to ground

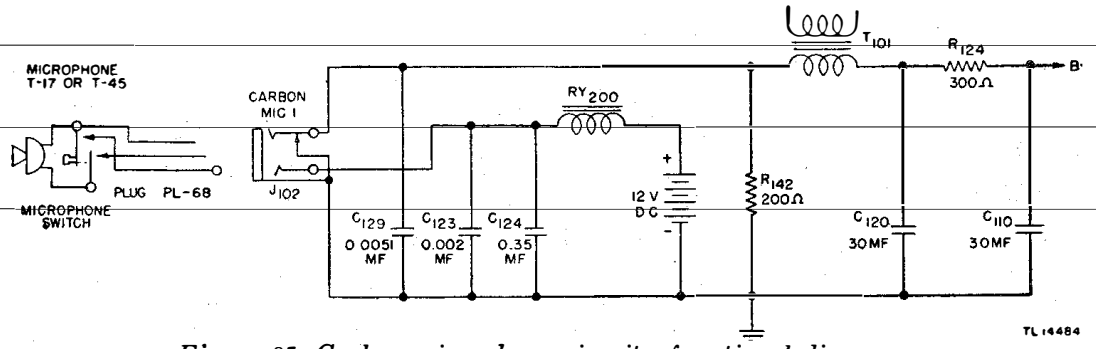

Figure 85. Carbon microphone circuit—functional diagram.

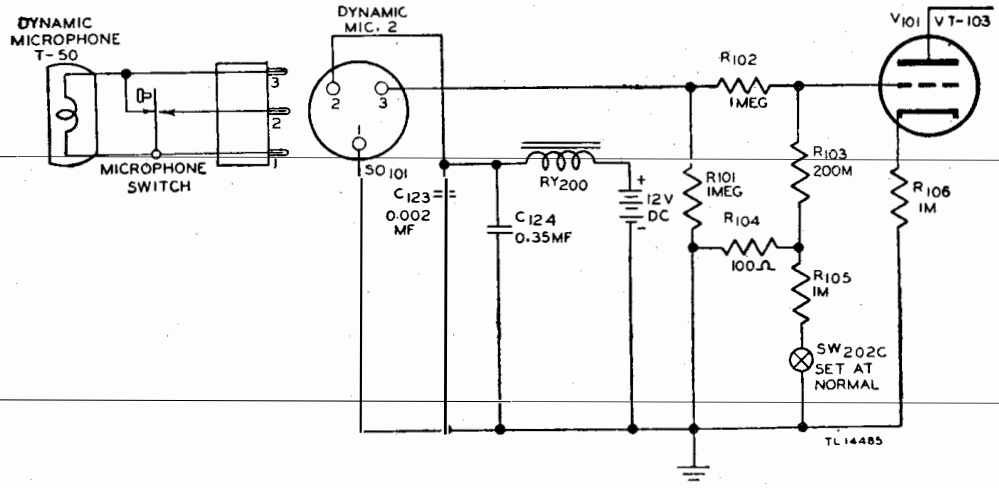

Figure 86. Dynamic microphone circuit—functional diagram.

through pin No. 2 on socket SO_{101} and relay RY_{200}. Capacitor C_{123} is an r-f bypass to prevent high-frequency interference from entering the amplifier by way of the microphone cords. Capacitor C_{124} prevents sparking at the microphone switch contacts when breaking the d-c current through relay RY_{200}. The DYNAMIC MIC. 1 control (resistor R_{111}) functions as a gain control for the speech amplifier when a dynamic microphone or field telephone is used to modulate the transmitter. (See fig. 79.)

c. Modulation Limiter Control. The LIMITER CONTROL (resistor R_{134}) (fig. 82) is located on the front panel of the speech amplifier behind a cover plate. Its purpose is to control the amplitude of the a-f signal applied to the modulation limiter tube V_{105}. The control is provided with a slotted shaft which is accessible when the cover plate is removed. See paragraph 197 for instructions as to the proper procedure for adjusting the modulation limiter control.

d. Sidetone Volume Control. The sidetone volume control (fig. 83) is located on the rear side of the speech-amplifier chassis. Its purpose is to control the amplitude of the a-f signal applied to the grid of the sidetone amplifier tube V_{10}.

e. Auxiliary Key Jack. The KEY jack located on the front panel of the speech amplifier is connected in the cathode circuit of oscillator tube V_8, located in the transmitter. The jack accommodates Plug PL-55. The transmitter can be keyed for c-w operation by inserting a key plug into this jack.

Caution: When the transmitter is keyed from this jack, the receiver disabling circuits do not operate. Therefore, be sure that neither radio receiver is tuned to the transmitter frequency or a harmonic thereof.

f. Modulator Plate Meter. The MODULATOR PLATE meter M_{101} (fig. 62) indicates the d-c current to the Class B modulator tubes V_3 and V_4. Correct zero-signal bias to tubes V_3 and V_4 is obtained by adjusting the MODULATOR BIAS control (located on the front panel of the transmitter) while observing the indication of the meter. When modulating the transmitter, the microphone gain controls are adjusted properly by observing the indication of the meter on voice peaks.

Section IV. THEORY OF JUNCTION BOX JB-70-A

Note. Junction Box JB-70-A (fig. 124) contains all the electrical circuits necessary for the control of Power Unit PE-95-( ), Radio Transmitter BC-610-E, and Radio Receivers BC-312-( ), BC-342-( ). A-c power outlets are provided for Rectifier RA-63-(*), lights, heater, blower, etc.

152. Transmitter Control Switch SW_{203}

a. General. The transmitter control switch SW_{203} is a three-position lever-key type of switch and is located on the front panel of the junction box. The switch is marked TRANS. ON TRANS. OFF REC. TO EE-8. The switch performs four major functions:

(1) Applies 115 a-c volts to coils of relays RY_1 and RY_4.

(2) Connects coil of relay RY_{200} to KEY jacks or remote telephone line through contacts on switch SW_{202B}.

(3) Connects remote telephone line through capacitor C_{202} and contacts on switch SW_{202C} to input of speech amplifier.

(4) Connects remote telephone line through capacitor C_{202} and contacts on switch SW_{202A} to the receiver outputs.

b. Trans. on Position (fig. 87).

(1) When switch SW_{203} is set to TRANS. ON and the REMOTE CONTROL EE–8 switch SW_{202} is set to NORMAL, switch SW_{203} performs two functions:

(*a*) Switch SW_{203} applies 115 a-c volts to relays RY_1 and RY_4. Relay RY_1 applies plate power to the transmitter; relay RY_4 is the antenna shorting relay. See paragraph 142 for a detailed description of the functions of these relays.

(*b*) Switch SW_{203} connects one side of the coil of relay RY_{200} to the KEY jacks located on the junction box. Relay RY_{200} is keyed during c-w operation. For a detailed description of relay RY_{200} see paragraph 154.

(2) When switch SW_{203} is set to TRANS. ON and switch SW_{202} is set to either TELEPHONE position, switch SW_{203} performs three functions:

(*a*) Switch SW_{203} applies 115 a-c volts to relays RY_1 and RY_4.

(*b*) Switch SW_{203} applies 12 d-c volts to the coil of relay RY_{200}.

(*c*) Switch SW_{203} connects the ungrounded REMOTE TELEPHONE terminal through capacitor C_{202} to the grid of the first a-f amplifier tube V_{101}.

(3) When switch SW_{203} is set to TRANS. ON and switch SW_{202} is set to either TELEGRAPH position, switch SW_{203} performs two functions:

(*a*) Switch SW_{203} applies 115 volts a-c to relays RY_1 and RY_4.

(*b*) Switch SW_{203} connects one side of the coil of relay RY_{200} to the ungrounded REMOTE TELEPHONE terminal of the junction box. The transmitter can then be keyed from the far end of a telephone line connected to the REMOTE TELEPHONE terminals.

c. TRANS. OFF POSITION. In the TRANS. OFF position, all circuits to which switch SW_{203} is connected are open.

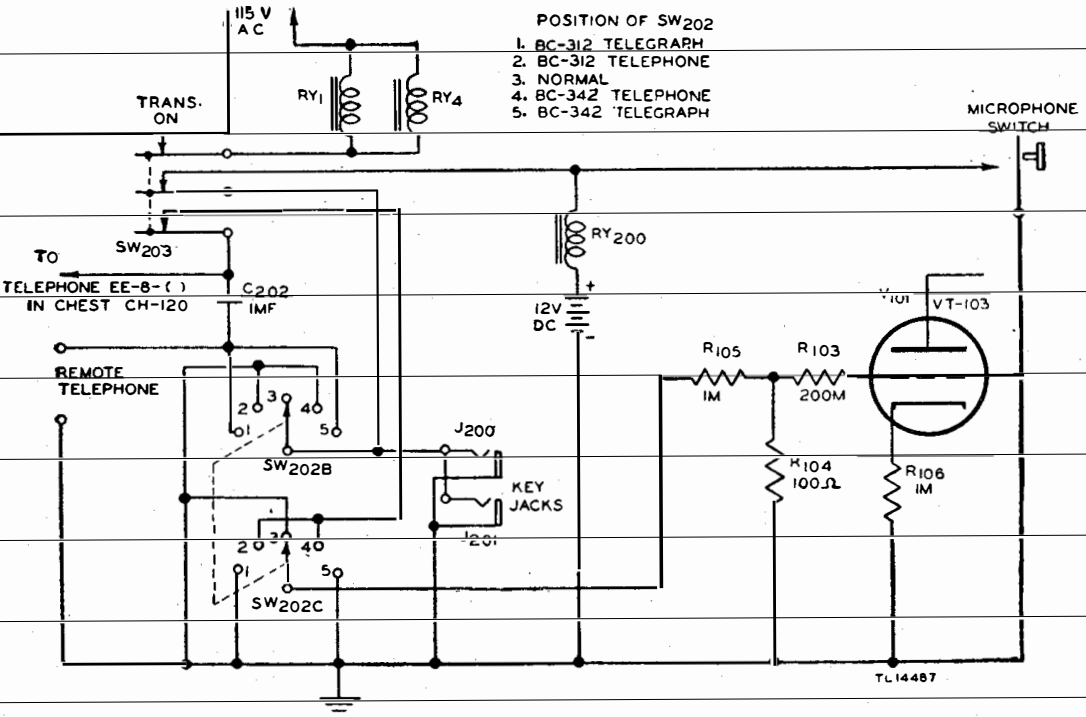

Figure 87. Transmitter control switch in TRANS. ON position—functional diagram.

d. REC. TO EE–8 POSITION (fig. 88). When switch SW_{203} is set to REC. TO EE–8 and switch SW_{202} is set to either TELEPHONE position, switch SW_{203} performs one function: Switch SW_{203} connects the output from either Radio Receiver BC–312–( ) or BC–342–( ) to the ungrounded REMOTE TELEPHONE terminal through capacitor C_{202}.

153. Remote Control EE–8 Switch SW_{202}

a. GENERAL. The remote control switch SW_{202} has three sections and five positions. Its functions are as follows:

(1) When switch SW_{203} is set to REC. TO EE–8, the A section of switch SW_{202} (fig. 88) switches the a-f outputs from either Radio Receiver BC–312–( ) or BC–342–( ) to the REMOTE TELEPHONE terminals of the junction box.

(2) When switch SW_{203} is set to the TRANS. ON position, the B section of switch SW_{202} (fig. 87) operates keying relay RY_{200} (for remote phone operation), or connects the keying relay to the ungrounded REMOTE TELEPHONE terminal of the junction box for remote keying of the transmitter.

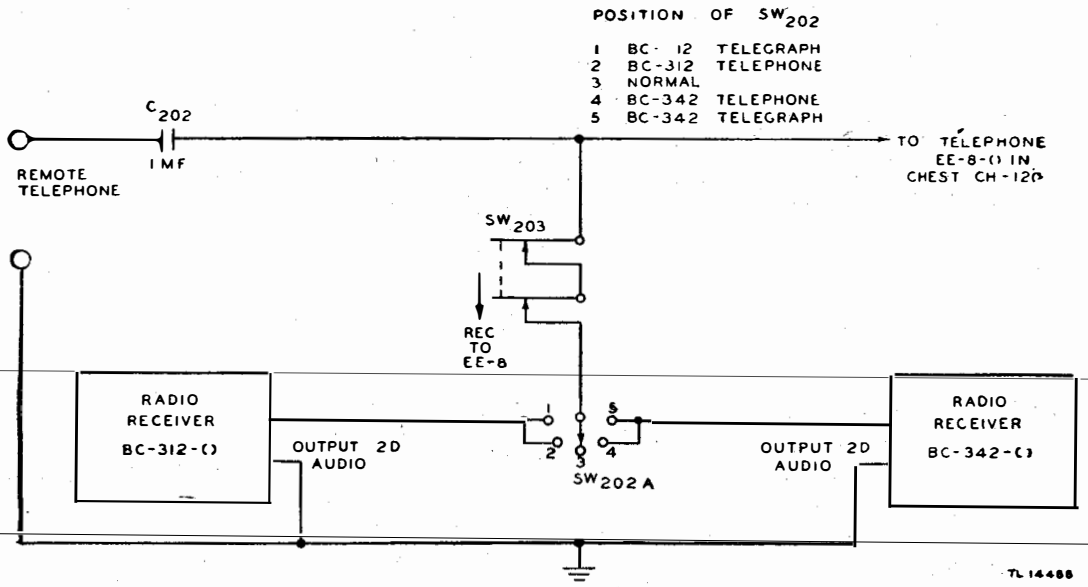

Figure 88. Transmitter control switch in REC. TO EE-8 position—functional diagram.

(3) When switch SW_{203} is set to the TRANS. ON position, the C section of switch SW_{202} (fig. 87) switches the input of the speech amplifier to the REMOTE TELEPHONE terminals of the junction box for remote modulation of the transmitter.

b. Telegraph Positions (fig. 87). When switch SW_{202} is set to either TELEGRAPH position and switch SW_{203} is set to TRANS. ON, switch SW_{202B} connects keying relay RY_{200} to the REMOTE TELEPHONE terminals of the junction box. The transmitter can then be keyed from the far end of a telephone line connected to the REMOTE TELEPHONE terminals. When switch SW_{203} is set to REC. TO EE-8, switch SW_{202A} connects the a-f output from Radio Receiver BC-312-( ) or BC-342-( ) to the telephone line. This enables the operator at the remote station to hear the signals received by either receiver. The choice of receivers depends on whether switch SW_{202} is set to the BC-312 or BC-342 position. Switch SW_{202C} grounds the Telephone EE-8 input to the speech amplifier. Capacitor C_{202} isolates the a-f circuits in the junction box from the d-c circuits.

c. Telephone Positions (fig. 87). When switch SW_{202} is set to either TELEPHONE position and switch SW_{203} is set to TRANS. ON, switch SW_{202B} completes the d-c circuit through relay RY_{200}, and switch SW_{202C} connects the REMOTE TELEPHONE terminals (through capacitor C_{202}) to the Telephone EE-8 input to the speech amplifier. This enables the operator at the remote station to voice modulate the transmitter by speaking into the microphone of the Telephone EE-8-( ) at the remote station. When switch SW_{203} is set to REC. TO EE-8, switch SW_{202A} connects the a-f output from either radio receiver to the telephone line. This enables the operator at the remote station to hear the signals received by either receiver. The choice of receivers depends on whether switch SW_{202} is set to the BC-312 or BC-342 position.

d. Normal Position (fig. 87). When switch SW_{202} is set to NORMAL, switch SW_{202C} grounds the Telephone EE-8 input to the speech amplifier.

154. Relay RY_{200} (fig. 89)

a. General. Relay RY_{200} is a five-pole, single-throw relay located in the junction box. This relay can be energized by keys plugged into either KEY jack, by the microphone switches, or by setting switches SW_{203} and SW_{202B} to TRANS. ON and TELEPHONE respectively. The relay can also be energized from a remote station by Key J-45 plugged into Junction Box JB-60-A. When energized relay RY_{200} performs the following functions:

(1) Keys the cathode circuit of the master (or crystal oscillator) and the c-w sidetone oscillator.

(2) Operates relays RY_1 and RY_4 in the transmitter for phone operation.

(3) Disables Radio Receivers BC-312-( ) and BC-342-( ).

b. Keying Circuits. When the transmitter is keyed for c-w operation, or when the microphone switches are pressed for phone operation, relay RY_{200} is energized. When energized by a microphone switch, one pair of contacts on relay RY_{200} applies 115 a-c volts to relays RY_1 and RY_4 located in the transmitter. When relay RY_{200} is keyed for c-w operation, this pair of contacts is short-circuited by contacts on switch SW_{203}. This is necessary to protect relays RY_1 and RY_4 from excessive wear. When relay RY_{200} is energized,

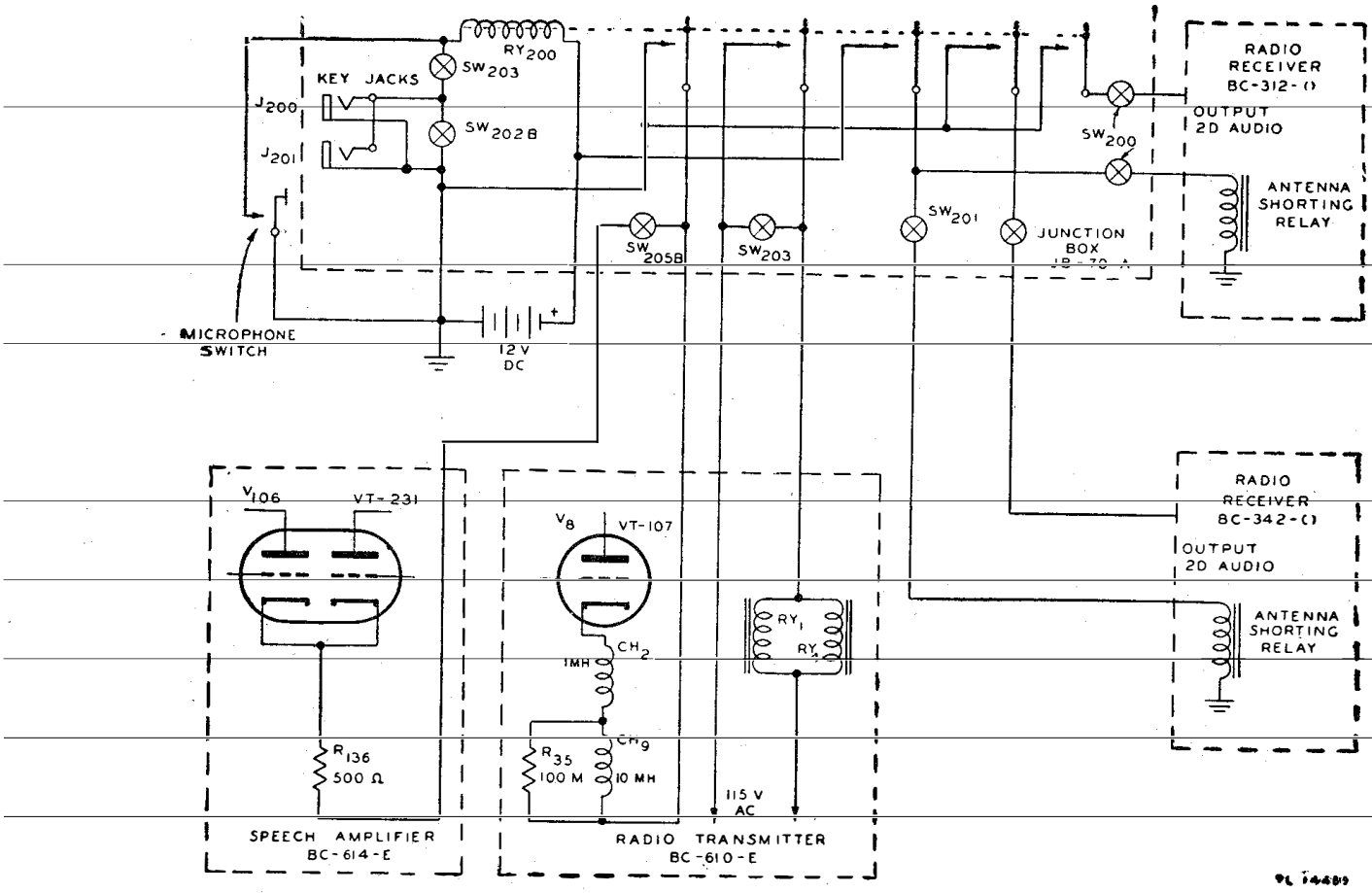

Figure 89. Keying relay RY_{200}—functional diagram.

another pair of contacts completes the cathode circuits of the m-o or crystal-oscillator tube V_8 and the c-w sidetone oscillator tube V_{106}. The C.W. SIDETONE switch SW_{202B} is also connected in the cathode circuit of tube V_{106}; its function is described in paragraph 157.

c. Receiver Disabling Circuits. One pair of contacts on relay RY_{200} applies 12 d-c volts (through switches SW_{200} and SW_{201}) to the antenna shorting relays in Radio Receivers BC–312–( ) and BC–342–( ). One pair of contacts grounds the audio output of Radio Receiver BC–312–( ) through switch SW_{200}; another pair of contacts ground the audio output of Radio Receiver BC–342–( ) through switches SW_{200} and SW_{201}. See paragraph 155 for a functional description of RECEIVER DISABLING switches SW_{200} and SW_{201}. Because of the close proximity of the receiving and transmitting antennas, the receiver input circuits are subjected to large amounts of r-f energy when the receivers are turned to the transmitter frequency or a harmonic of the transmitter frequency. Radio Receivers BC–312–( ) and BC–342–( ) are provided with antenna shorting relays. To prevent damage to the input circuits when the transmitter is operating, contacts on these relays ground the receiving antennas.

155. Receiver Disabling Switches SW_{200} and SW_{201} (fig. 90)

Switches SW_{200} and SW_{201} are double-pole, double-throw toggle switches. When these switches are thrown to the ON position and relay RY_{200} is energized, they perform two functions: One pair of contacts on switches SW_{200} and SW_{201} connects

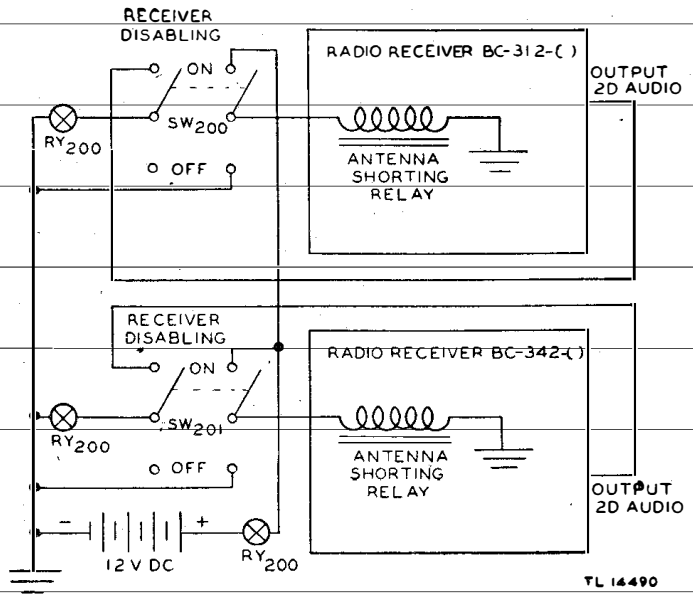

Figure 90. Receiver disabling switches—functional diagram.

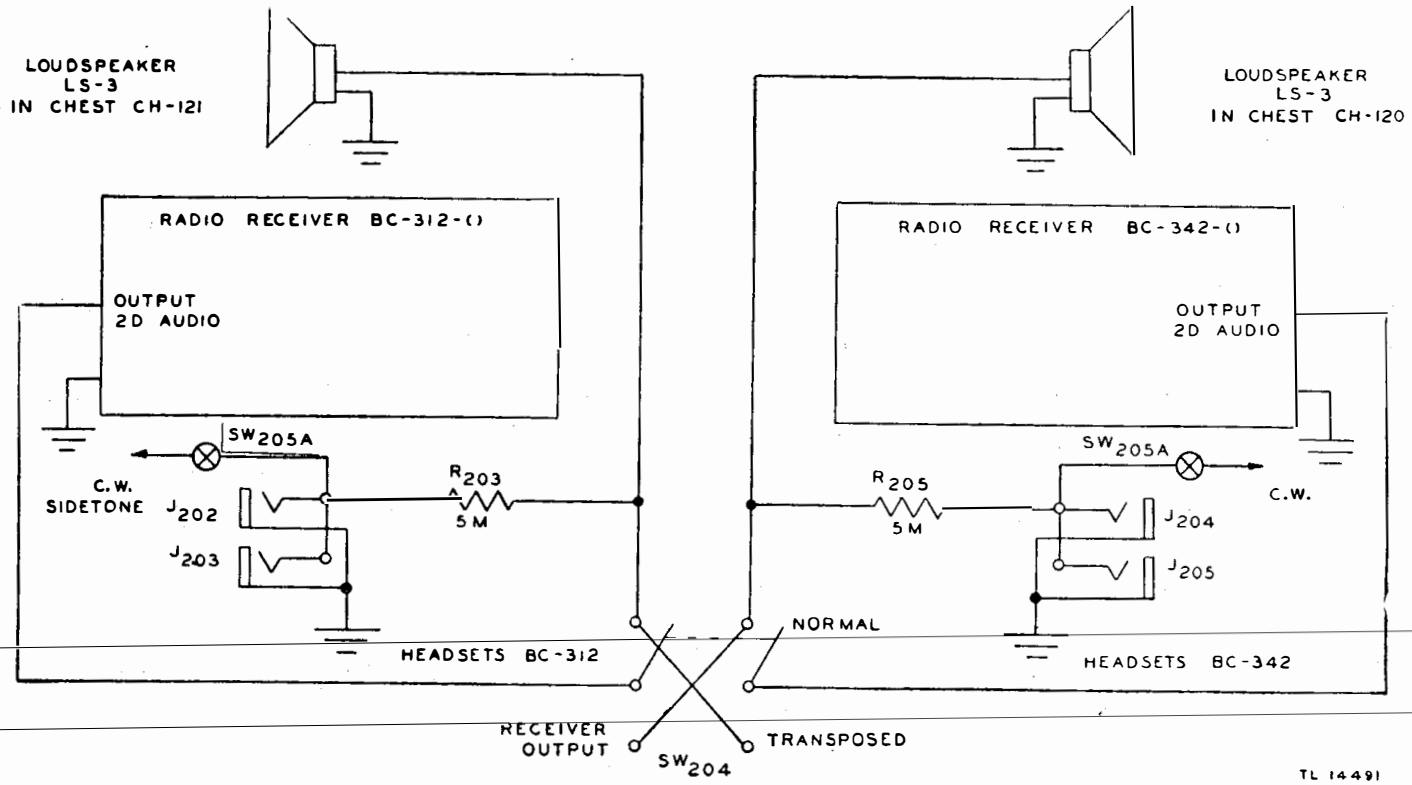

Figure 91. RECEIVER OUTPUT switch—functional diagram.

12 d-c volts to the antenna shorting relays; the other pair of contacts grounds the a-f outputs of the two receivers. Switch SW_{200} (BC-312) disables Radio Receiver BC-312-( ), and switch SW_{201} (BC-342) disables Radio Receiver BC-342-( ). When these two switches are thrown to the OFF position, the antenna shorting relays are grounded. See paragraph 154 for the functions of relay RY_{200}.

156. Receiver Output Switch SW_{204} (fig. 91)

Switch SW_{204} is a double-pole, double-throw toggle switch and it functions as follows: When switch SW_{204} is set to NORMAL, the a-f output of Radio Receiver BC-312-( ) is connected to the HEADSETS jacks mounted toward the left-hand side of the junction box and to Loudspeaker LS-3 located in Chest CH-121. The a-f output of Radio Receiver BC-342-( ) is connected to the HEADSETS jacks mounted toward the right-hand side of the junction box and to Loudspeaker LS-3 located in Chest CH-120. When switch SW_{204} is set to TRANSPOSE, the a-f output of Radio Receiver BC-312-( ) is connected to the right-hand HEADSETS jacks and to Loudspeaker LS-3 located in Chest CH-120. The a-f output of Radio Receiver BC-342-( ) is connected to the left-hand HEADSETS jacks and to Loudspeaker LS-3 located in Chest CH-121. By the use of switch SW_{204}, the operator at Radio Receiver BC-312-( ) can instantly switch his loudspeaker and headsets to the output of Radio Receiver BC-342-( ), and vice versa. Switch SW_{204} does not effect the functioning of the RECEIVER DISABLING switches. The a-f signal applied to the HEADSETS jacks is attenuated an appropriate amount by resistors R_{203} and R_{205}. These resistors also serve to isolate the headsets from the receiver output circuits to prevent grounding the c-w sidetone signal when the receivers are disabled.

157. C.W. Sidetone Switch SW_{205} (fig. 92)

Electrically, switch SW_{205} is a two-section, three-position switch. Its purpose is to complete the cathode circuit of the c-w sidetone oscillator tube V_{106} and to switch the c-w sidetone signal output of the sidetone amplifier tube V_{108} to either pair of HEADSETS jacks. When switch SW_{205} is set to position 1 (TO BC-312), the A section applies the sidetone signal to the left-hand HEADSETS jacks of the junction box; when the switch is set to position 3 (TO BC-342), the A section applies the sidetone signal to the right-hand HEADSETS jacks.

158. Start-Stop Switch SW_{206} (fig. 93)

Switch SW_{206} is used to start and stop Power Unit PE-95-( ). When the START button is pressed, current from the 12-volt battery in the power unit flows through the starting relay in the power unit.

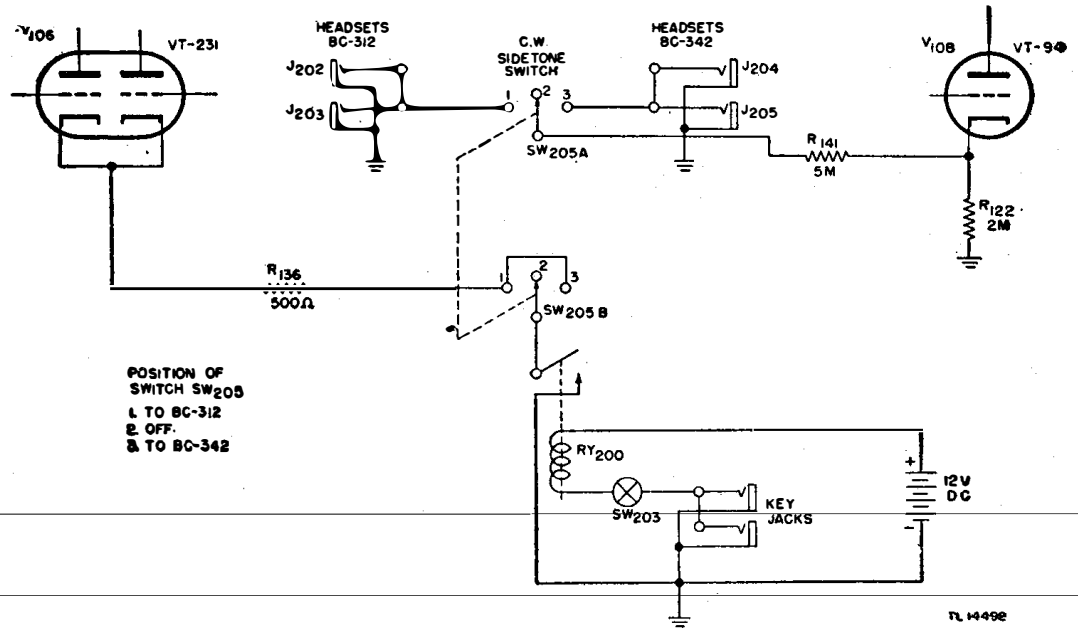

Figure 92. C. W. SIDETONE switch—functional diagram.

Contacts on the starting relay complete the starting circuit and start the motor of Power Unit PE–95–( ). When the STOP button is pressed,

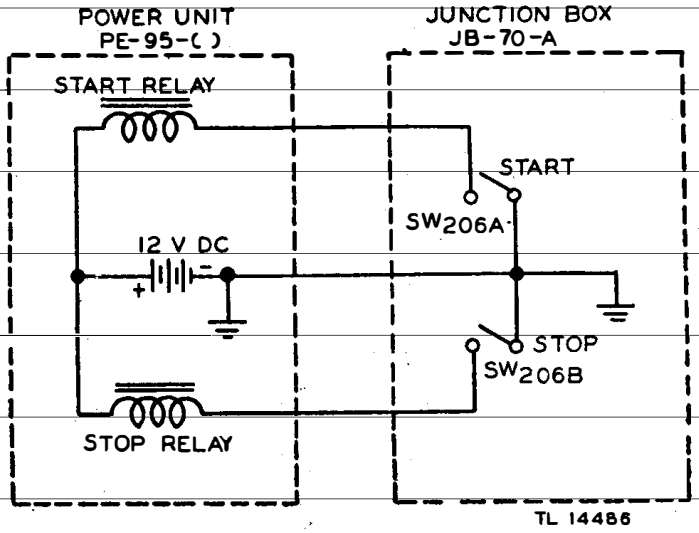

Figure 93. START-STOP switch—functional diagram.

current from the 12-volt battery flows through the stopping relay. Contacts on the stopping relay short-circuit the ignition system and stop the motor of Power Unit PE–95–( ).

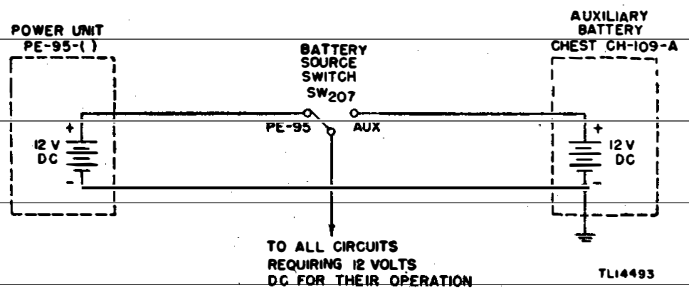

Figure 94. Battery source switch—functional diagram.

159. Battery Source Switch SW_{207} (fig. 94)

Switch SW_{207} is a single-pole, double-throw toggle switch. When switch SW_{207} is set to PE–95, the 12-volt storage battery located in the trailer with Power Unit PR–95–( ) is connected to all circuits requiring 12 d-c volts for their operation. When switch SW_{207} is set to AUX., the 12-volt d-c circuits are connected to the 12-volt storage battery in Chest CH–109–A. The negative terminals of the storage batteries are grounded and the positive terminals are connected to switch SW_{207}.

160. Circuit Breaker CB_{200} (fig. 124)

Circuit breaker CB_{200} is designed to break a current in excess of approximately 50 amperes. One side of the 115-volt a-c line from Power Unit PE–95–( ) is common to all equipment. The other side of the line is connected to the equipment through circuit breaker CB_{200}. The normal current required by the equipment passes through the circuit breaker without interruption; however, a short circuit on the line, or a load in excess of 50 amperes trips the circuit breaker. The circuit breaker can be reset by pressing the PRESS TO RESET button on the front of the junction box. When switch SW_{205} is set to position number 1 or 3, the B section grounds the cathode resistor R_{136} of the c-w sidetone oscillator tube V_{106} through a pair of contacts on relay RY_{200}. When switch SW_{205} is set to position number 2 (OFF) the c-w sidetone circuits are open.

161. Surge Filters

When the circuit to a coil carrying a current is broken, the magnetic field about the coil collapses. The collapsing magnetic field induces a back emf

(electromotive force) in the coil that is proportional to the product of the inductance of the coil and the time rate of change of the current through the coil. The current through the coil changes very rapidly at the instant the circuit is broken; accordingly, the voltage induced in the coil may reach extremely high proportions. In a circuit containing inductance, a dissipative network is connected across the coil to prevent arcing at the contacts of the switch which breaks the current. This network, sometimes called a surge filter, consists of a resistor in series with a capacitor. In Junction Box JB-70-A there are four of these dissipative networks. (See fig. 95.) The action of a surge filter can best be shown by an example. When the transmitter is keyed for c-w operation, the current through relay RY_{200} is interrupted in accordance with the dots and dashes to be transmitted. When the current is interrupted, the back emf induced in the coil of relay RY_{200} charges capacitor C_{204} through resistor R_{204}. Capacitor C_{204} then discharges back through resistor R_{204} and the coil. However, the resistance of the coil together with resistor R_{204} is high enough that only a few highly damped oscillations occur and the transient voltage dies out in a very short period of time. Thus the back emf, induced in the coil at the instant the current is interrupted, is dissipated in the form of heat in resistor R_{204} and the resistance of the coil. The antenna shorting relays of Radio Receivers BC-312-( ) and BC-342-( ) are provided with surge filters consisting of resistor R_{200} with capacitor C_{200} and resistor R_{201} with capacitor C_{201}. Because of the inductance of choke coils CH_2, and CH_9 in the cathode circuit of oscillator tube V_8, a surge filter is required. This filter consists of capacitor C_{203} and resistor R_{202}.

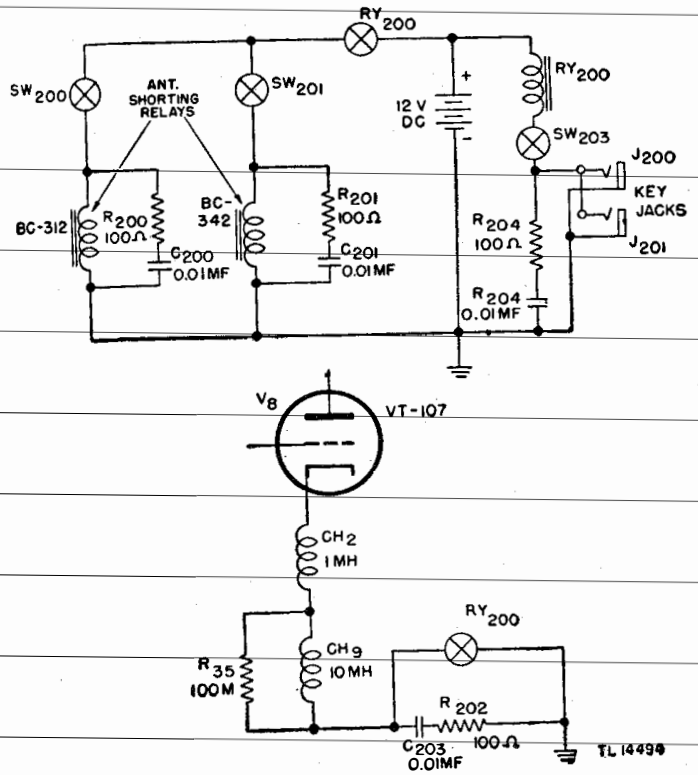

Figure 95. Surge filters—functional diagram.

Section V. OVER-ALL SYSTEM FUNCTION

162. General

Figure 96, an over-all system block diagram, shows the complete function of Radio Sets SCR-399-A and SCR-499-A. The major components of the radio set are: Radio Transmitter BC-610-E, Antenna Tuning Unit BC-939-A, Speech Amplifier BC-614-E, Junction Box JB-70-A, and Radio Receivers BC-312-( ) and BC-342-( ). The signal paths are as shown in figure 96.

163. C-W Operation

The transmitter uses a master or crystal oscillator which is keyed for c-w operation. To key the transmitter Key J-37 is connected to either KEY jack of Junction Box JB-70-A. The output of the oscillator is applied successively to the buffer-doubler, the i-p-a, and the p-a stages. The r-f power output of the p-a stage is approximately 400 watts in the 2- to 8-mc range, 300 watts in the 8- to 12-mc range, and 275 watts in the 12- to 18-mc range. The r-f output of the p-a stage is coupled to the transmitting antenna by means of Antenna Tuning Unit BC-939-A. Plate and screen-grid voltage for the oscillator buffer-doubler, and i-p-a tubes is supplied by the exciter power supply; plate voltage for the p-a tube is supplied by the high-voltage power supply; bias voltage for the i-p-a and p-a tubes is supplied by the bias power supply. The sidetone oscillator in the speech amplifier operates when the transmitter is keyed, and the output of the sidetone oscillator is applied to the sidetone amplifier. The output of the sidetone amplifier is connected to the HEADSETS jacks in the junction box through the C.W. SIDETONE switch. Keying the transmitter operates the receiver disabling circuits when the RECEIVER DISABLING switches in the junction box are set to ON. Figure 97 is a functional schematic wiring diagram of the transmitter, speech amplifier, and junction box for c-w operation.

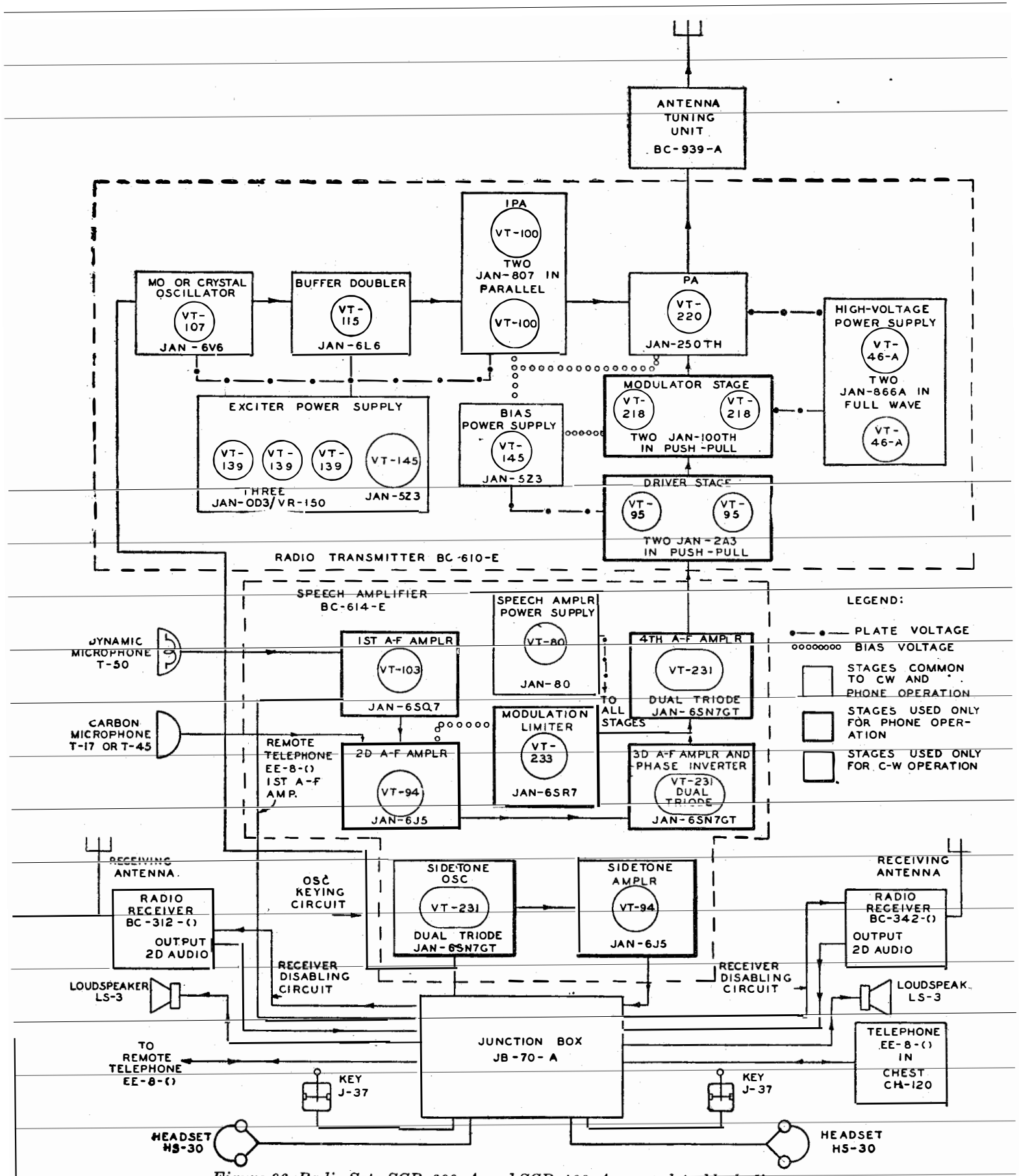

Figure 96. Radio Sets SCR-399-A and SCR-499-A—complete block diagram.

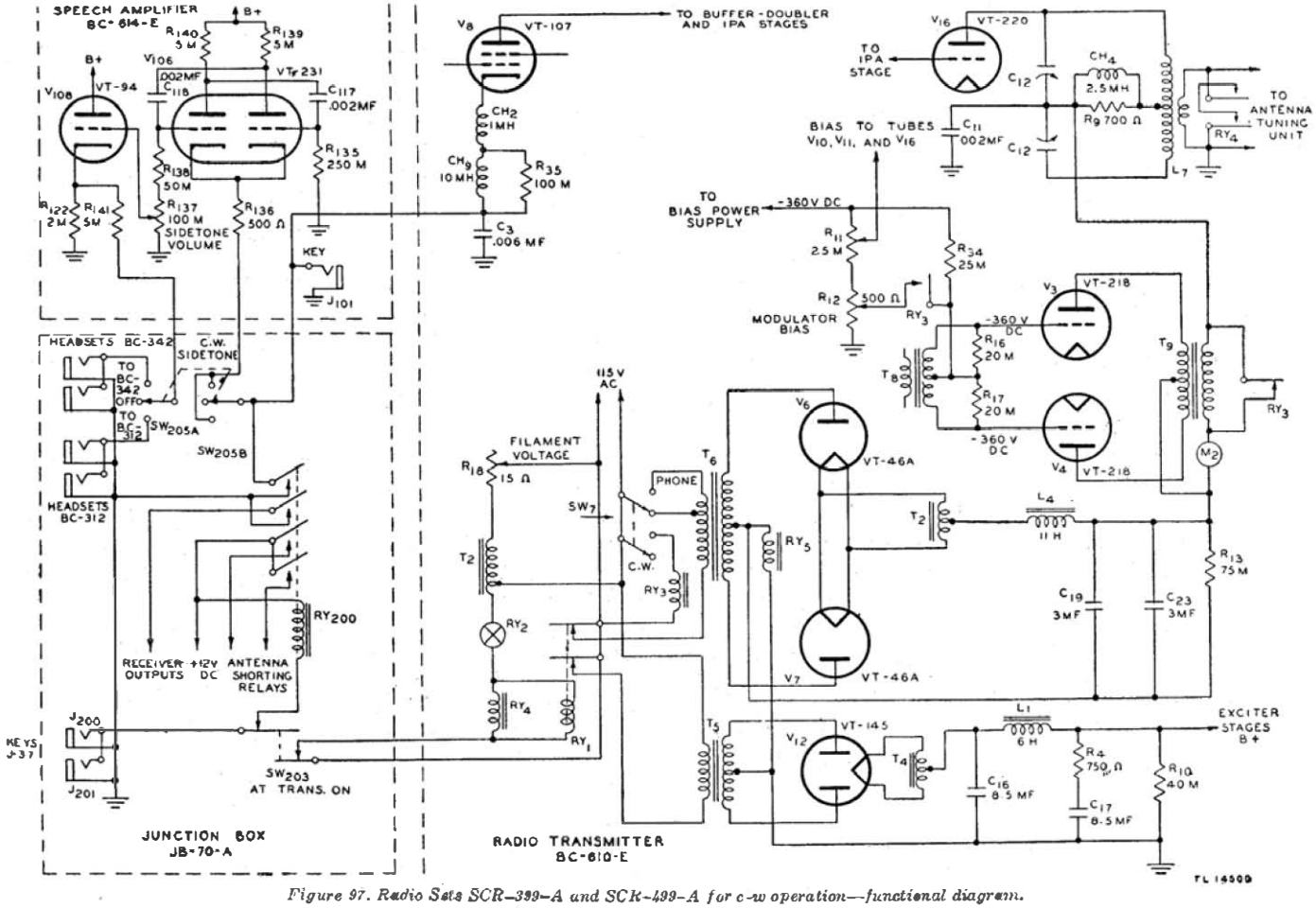

Figure 97. Radio Sets SCR-399-A and SCR-499-A for c-w operation—functional diagram.

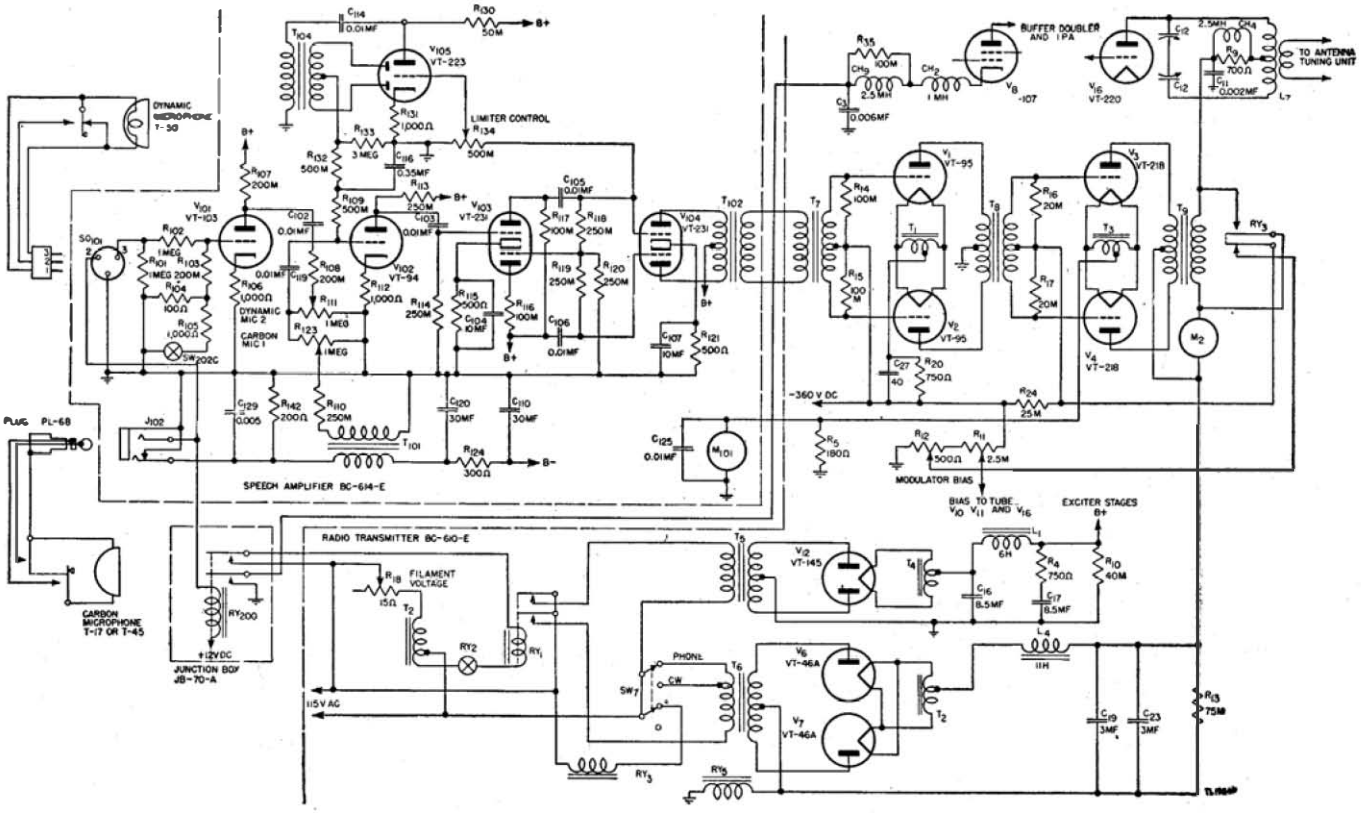

Figure 98. Radio Sets SCR-399-A and SCR-499-A for phone operation—functional diagram.

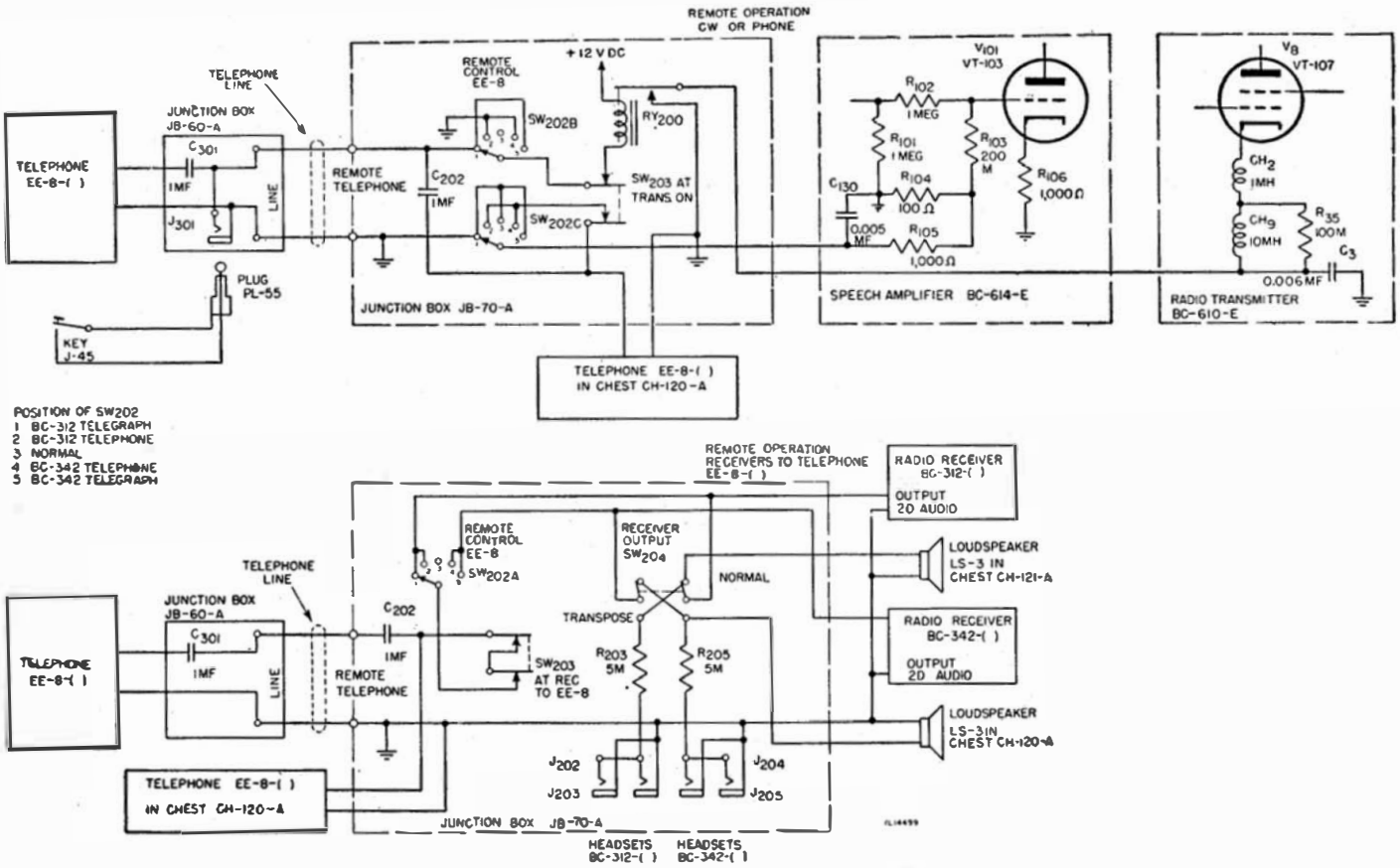

Figure 99. Radio Sets SCR-399-A and SCR-499-A for remote operation—functional diagram.

164. Phone Operation

For phone operation, the transmitter oscillator produces continuous oscillations which are applied successively to the buffer-doubler, i-p-a, and p-a stages. The r-f carrier output of the p-a stage is approximately 300 watts when operating in the 2- to 8-mc range, 250 watts in the 8- to 12-mc range, and 200 watts in the 12- to 18-mc range. The r-f carrier is amplitude modulated in the p-a stage (plate modulation). The transmitter can be modulated approximately 90 percent by a carbon Microphone T–17 or T–45 or a dynamic Microphone T–50 connected to the CARBON MIC. 1 and DYNAMIC MIC. 2 jack and socket, respectively, of Speech Amplifier BC–614–E. Microphone T–50 connects to the input of the first a-f amplifier; Microphone T–17 or T–45 connects to the input of the second a-f amplifier. The output of Microphones T–17 and T–45 is amplified by the second, third, and fourth a-f amplifiers; the output of Microphone T–50 is amplified by the first, second, third, and fourth a-f amplifier. A portion of the output of the third a-f amplifier is applied to a modulation limiter. The modulation limiter produces a d-c bias voltage which reduces the gain of the second a-f amplifier on extreme voice peaks to prevent over modulation of the transmitter. The speech amplifier power supply furnishes plate and filament voltage for all tubes in the speech amplifier, and current for a carbon microphone. The output of the fourth a-f amplifier is applied to the push-pull driver stage in the transmitter. The driver stage develops the a-f voltage and power required to drive the push-pull Class B modulator. The a-f output of the modulator stage is combined with the r-f carrier in the p-a stage to produce the amplitude-modulated r-f wave which is radiated from the transmitting antenna. The microphone switches operate the transmitter and the receiver disabling circuits when the RECEIVER DISABLING switches in the junction box are set to ON. Figure 98 is a functional schematic diagram of the transmitter, speech amplifier, and junction box for phone operation.

165. Remote Operation (fig. 99)

a. The transmitter can be keyed for c-w operation or voice modulated for phone operation from a remote station located as far away as 1 mile. The remote station consists of Telephone EE–8–( ) and Junction Box JB–60–A, and is connected to the REMOTE TELEPHONE terminals of the junction box by means of Wire W–110–B. To key the transmitter, Key J–45 is connected to the KEY jack of Junction Box JB–60–A. The a-f output of the Telephone EE–8–( ) is used to modulate the transmitter for remote phone operation. The operator at the remote station can hear signals received by Radio Receiver BC–312–( ) or BC–342–( ) when the transmitter control switch SW_{203} is set to REC. TO EE–8. The output of either receiver is selected by the REMOTE CONTROL EE–8 switch SW_{202A}. Telephone EE–8, located in Chest CH–120–A, is connected to the telephone line, and provides telephone facilities between the remote station and shelter.

b. Junction Box JB–60–A provides a convenient means of connecting a remote field Telephone EE–8–( ) and Key J–45 to a telephone line. Key jack J_{301} is connected across the LINE terminals. This jack accommodates Plug PL–55 and is used with key J–45 to key the transmitter. The short two-conductor rubber-covered cord entering the junction box through a rubber grommet marked EE–8 connects to field Telephone EE–8–( ). Capacitor C_{301} prevents Telephone EE–8 from short-circuiting jack J_{301}, and in addition, serves as a low-impedance path for the telephone ringer voltage and voice frequencies.

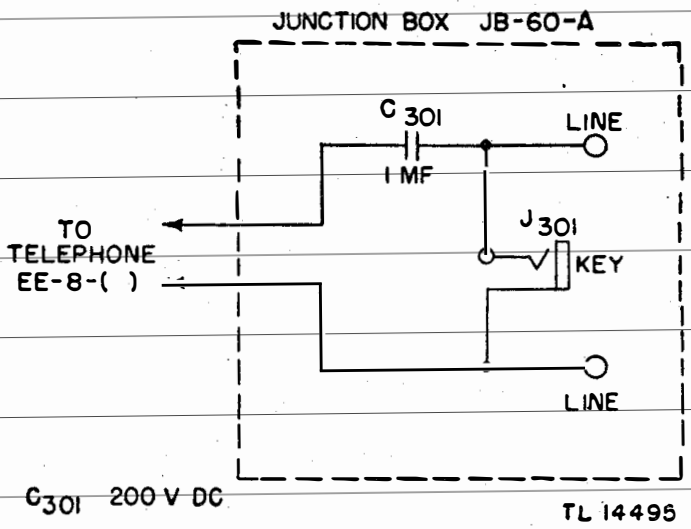

Figure 100. Junction Box JB–60–A—functional diagram.

166. Rectifier RA–63–(*)

Rectifier RA–63–(*) operates on an input voltage of 105 to 125 volts, 50- to 60-cycle alternating current. The rectifier furnishes a d-c output voltage sufficient to charge the 12-volt storage battery in Chest CH–109 at a 5-ampere rate when the battery is in a completely discharged condition. The rectifier is equipped with a cord and plug for connecting it to Junction Box JB–70–A. A-c voltage is applied to the primary winding of transformer T_{500} through circuit breaker CB_{500} and control switch SW_{200}.

(See fig. 101.) The circuit breaker protects transformer T_{500} from damage if the secondary circuit is subjected to a short circuit or overload. The circuit breaker can be reset by pressing the red PRESS TO RESET button. The rectifier can be turned on or off and the charging rate can be controlled by switch SW_{500}. When the switch is set to TRICKLE, the rectifier provides a trickle charging current of approximately 0.5 amperes into a fully charged battery. When the switch is set to FULL CHARGE, the rectifier furnishes a current of approximately 1.5 to 5 amperes, depending on the condition of the battery and the dry disk rectifier RA_{500}. Rectifier unit RA_{500} is connected in a full-wave bridge-type rectifier circuit. The secondary winding of transformer T_{500} furnishes a-c voltage to rectifier RA_{500} and relay RY_{500}. When the power is turned on, relay RY_{500} is energized and the relay contacts close. The d-c output of rectifier RA_{500} is applied to the d-c terminals of plug PL_{500}. When the power is turned off, the relay contacts open and prevent the battery from discharging back through the rectifier.

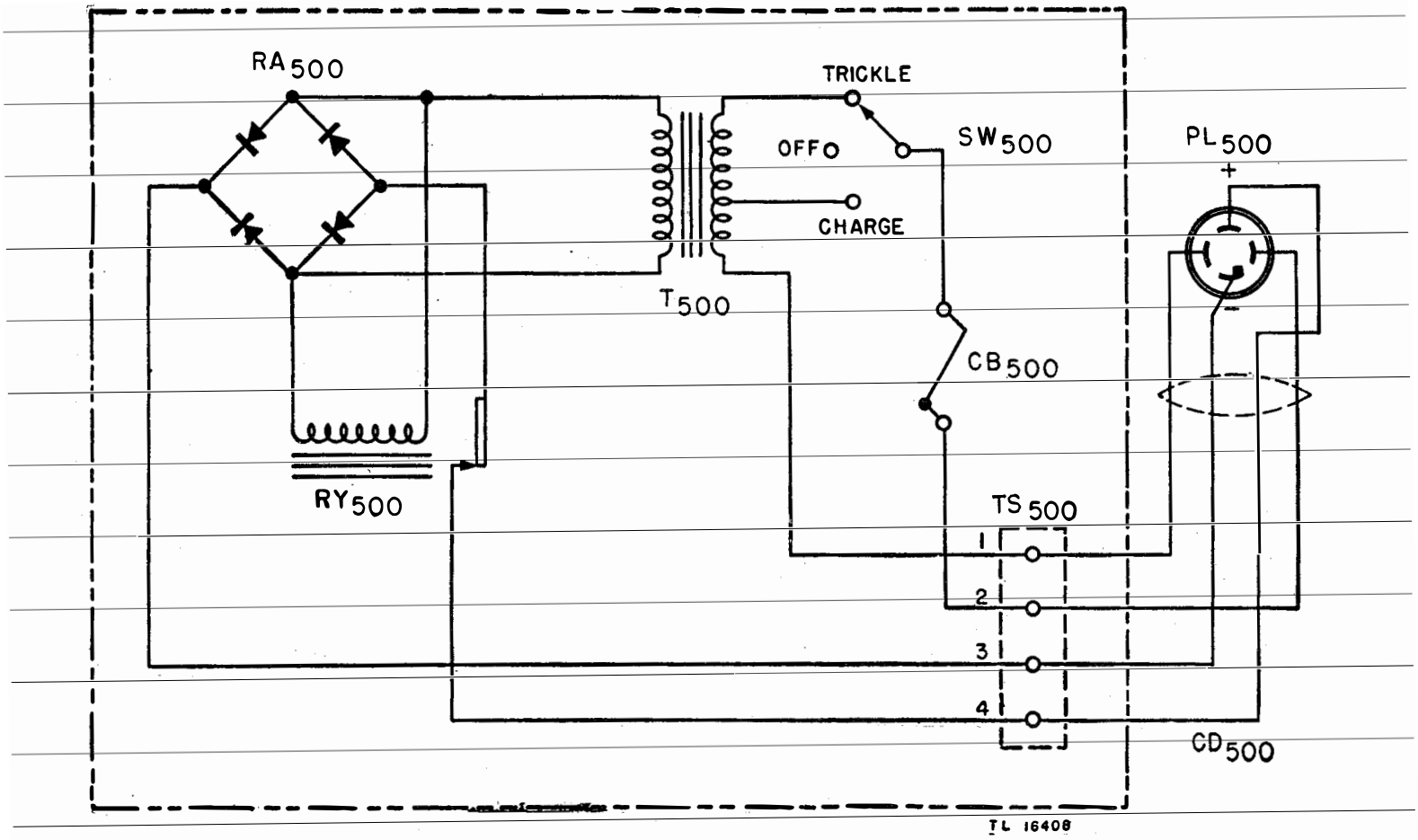

Figure 101. Rectifier RA-63-(*)—functional diagram.

Section VI. CHANGES IN EQUIPMENT

167. Changes in Radio Transmitter BC–610–E

a. Rectifier Filament Transformer T_2. Beginning with serial number 5191 on Order No. 30204–Phila–43, a change has been made in rectifier filament transformer T_2. This change was necessary to prevent break-down caused by arc-over in the transformer. A hermetically sealed transformer with ceramic stand-off terminal insulators (Signal Corps stock No. 2Z9611.144) has been substituted for Stancor type 10P34 (Signal Corps stock No. 2Z9611). The new transformer does not have a secondary center tap and requires connection of the positive high-voltage lead to one of the 2.5-volt filament terminals. For equipments manufactured before the change was made, MWO SIG 11–281–4 applies.

b. Plate Power Relay RY_1. Beginning with serial number 1353 on Order No. 30203–Phila–43, and serial number 5191 on Order No. 30204–Phila–43, a change has been made in plate power relay RY_1. This change was necessary to prevent failure of the transmitter due to arcing and sticking of the plate power relay contacts. An industrial contactor type relay, Allen-Bradley type A–209 bearing Hallicrafters part No. 21D056, is used to replace the Leach type 1154 relay.

c. Neutralization High-Voltage Isolation Capacitor C_{29}. Beginning with serial No. 5003 on Order No. 30204–Phila–43, capacitor C_{29} has been changed. This change was necessary to prevent failure of capacitor C_{29} due to the extremely high r-f potentials to which it is subjected during tuning of the transmitter or during periods of accidental overmodulation. The modification provides a capacitor of higher voltage rating, which prevents flash-over on the adjustable neutralizing capacitor C_{18} and injury to operating personnel by assuring complete isolation of capacitor C_{18} from the high-voltage d-c circuit. The original capacitor C_{29}, a Sangamo type HIL 0.001–mf, 2,500 d-c volts (working) Signal Corps stock No. 30A1–80, is replaced with an American War Standard capacitor CM–70–B201–J, 200–mmf, 5,000 d-c volts (working), Signal Corps stock No. 3K7020122. For equipments manufactured before the change was made, MWO SIG 11–281–5 applies.

d. Filter Choke L_1. Beginning with serial number 5191 on Order No. 30204–Phila–43, filter choke L_1 has been changed. The redesign of choke L_1 was necessary because of excessive temperature rise. A new filter choke L_1 Hallicrafters part No. 56C043, is used to replace the original choke L_1, Hallicrafters part No. 56B018. The new choke has the same base-mounting dimensions but is slightly higher than the original unit. Therefore, it is not interchangeable with the original choke unless switch SW_{10} is removed, *e* below.

e. Interlock Switches SW_2, SW_{10}, SW_{13}, and Circuit Wiring. Beginning with serial number 5191 on Order No. 30204–Phila–43, interlock switches SW_2 and SW_{13} and the circuit wiring to these switches has been changed. Interlock switch SW_{10} has been removed from the transmitter since it performs no necessary function, and because additional space is required for the new choke coil L_1 (*d* above). Interlock switches SW_2 and SW_{10} have been changed to open type contactor switches capable of breaking the primary current to the high-voltage plate supply transformer T_6. In addition, these switches have been rewired so that opening of the access doors breaks the primary circuit to the high-voltage plate supply transformer T_6 instead of the circuit to the plate power relay RY_1. (See fig. 73.) This modification of interlock switch wiring is necessary to prevent injury to operating personnel resulting from failure of relay RY_1 to open the high-voltage when the relay contacts freeze or stick.

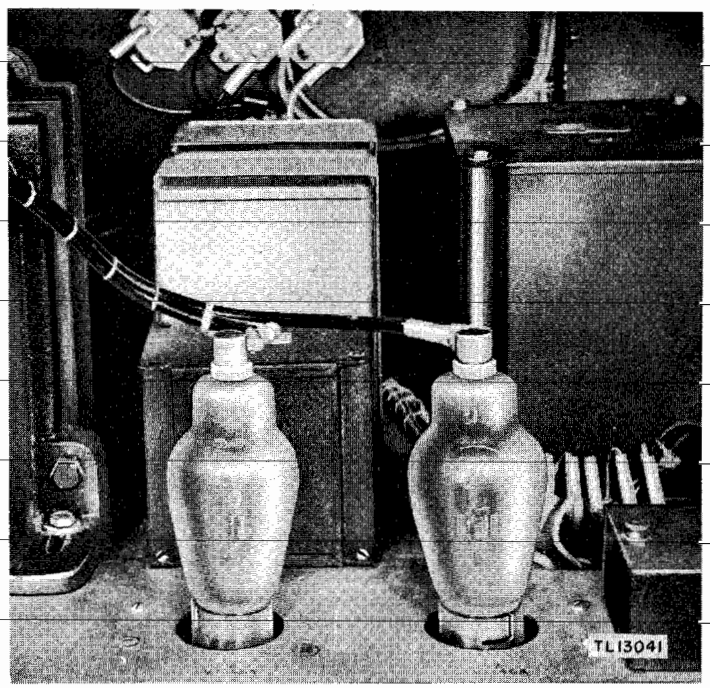

Figure 102. Mounting of tubes V_6 and V_7 before modification.

f. Mounting of Rectifier Tubes VT–46A. When operating Radio Transmitter BC–610–E in dusty localities, large amounts of dust may ac-

cumulate underneath and around the sockets for high-voltage rectifier Tubes VT–46A. This accumulation of dust can absorb moisture and cause flash-over from high-voltage terminals to ground. To facilitate cleaning of the tube sockets and to prevent failure of the transmitter due to flash-over, rectifier Tubes VT–46A can be remounted. Figures 102 and 103 show the original mounting and remounting of rectifier Tubes VT–46A, respectively. For equipments that show symptoms of the above trouble, and have not already been modified, MWO SIG 11–281–2 applies.

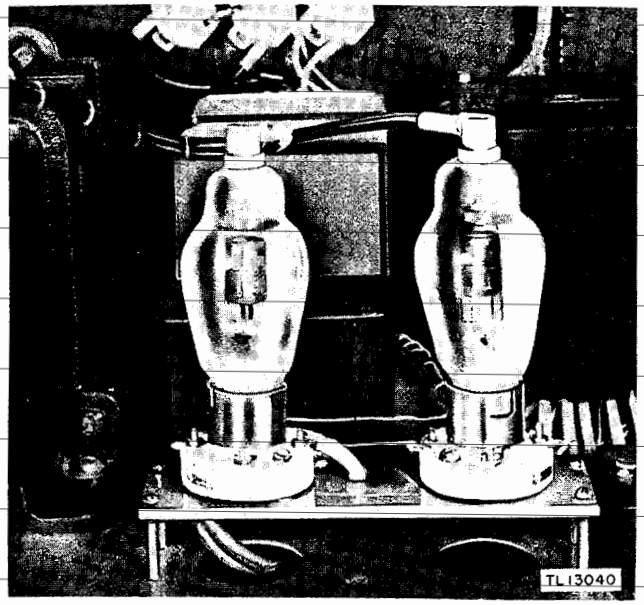

Figure 103. Mounting of tubes V_6 and V_7 after modification.

amplifier tube V_{108} remains connected to the junction of resistors R_{126} and R_{127}.

b. An improved replacement for dual electrolytic capacitors, reference Nos. C108, 109, C111, 115, and C112, 113 in Speech Amplifier BC–614–E have been procured and are now available for requisition from the field. The improved capacitor, Signal Corps stock No. 3DB8–117, should be requisitioned and installed in place of the original, Signal Corps stock No. 3DB8–35, whenever replacement becomes necessary.

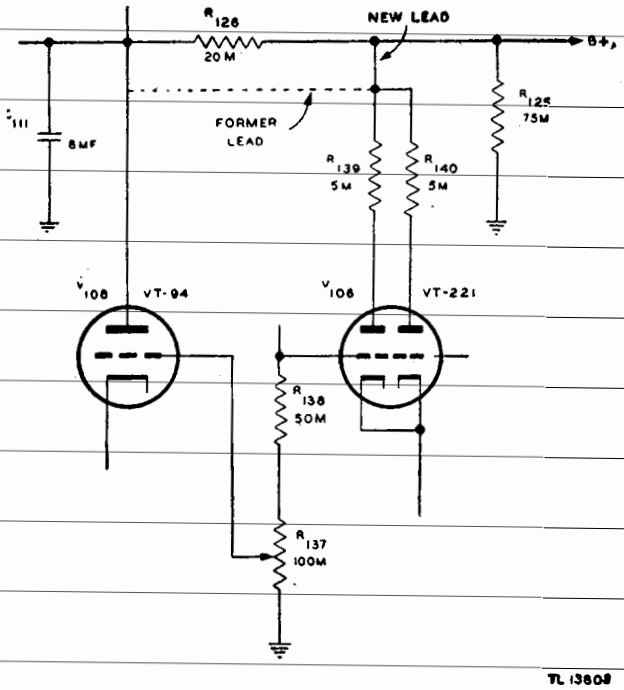

Figure 104. Diagram of change in sidetone oscillator circuit.

168. Changes in Speech Amplifier BC–614–E

a. Beginning with serial number 1151 on Order No. 30203–Phila–43, a change has been made in the c-w sidetone circuit. The change increases the available sidetone signal level and compensates for a possible loss in signal level due to circuit element deterioration. The plate-voltage supply connection for tube V_{106} has been changed from the junction of resistors R_{126} and R_{127} to the junction of resistors R_{125} and R_{126}. (See fig. 104.) This change increases the plate-voltage to the sidetone oscillator tube V_{106}. The increased plate voltage results in an increase in output of the sidetone oscillator tube V_{106}. Resistor R_{138} has been changed from 100,000 ohms to 50,000 ohms. This change increases the level of the sidetone signal available at the sidetone volume control R_{137} slightly more than 2 db (decibels). The plate-supply lead for sidetone

169. Wiring Change in Junction Box JB–70–A

If operation of RECEIVER DISABLING switches SW_{200} and SW_{201} does not provide disabling of Radio Receivers BC–312–( ) and BC–342–( ), respectively, regardless of the position of RECEIVER OUTPUT switch SW_{204}, the switches are incorrectly wired. (See fig. 105.) On an incorrectly wired Junction Box JB–70–A, operation of RECEIVER OUTPUT switch SW_{204} transposes the disabling action as well as the audio output of Radio Receivers BC–312–( ) and BC–342–( ) (except when RECEIVER OUTPUT switch SW_{204} is in NORMAL position). Such method of operation of these switches is undesirable. Correction in wiring of Junction Box JB–70–A to eliminate this fault was accomplished in production after approximately 200 Radio Sets SCR–399–A had been shipped on Order No. 14153–Phila–43.

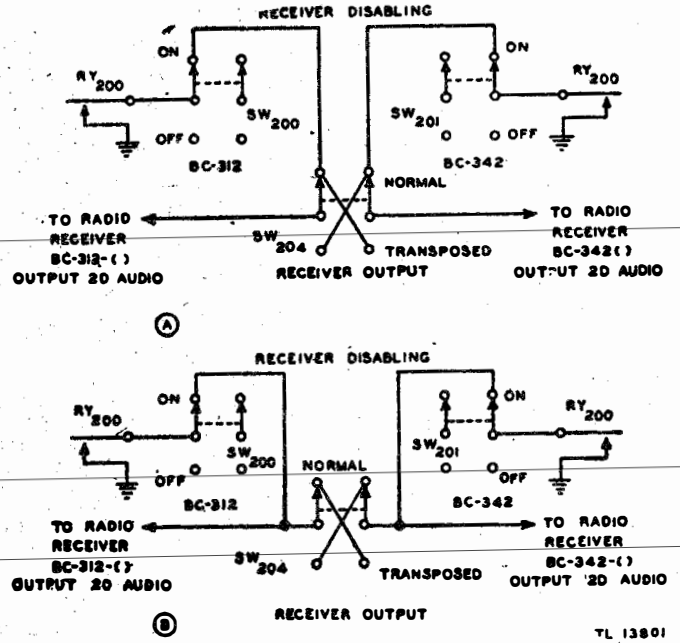

Figure 105. Diagram of change in receiver disabling circuits.

170. Change in Coupling Coils for Doublet Antenna Kit

a. A change has been made in the coupling coils for the doublet antenna kits supplied with Radio Sets SCR–399–A and SCR–499–A. However, 85 Radio Sets SCR–499–A were shipped with doublet antenna kits (on Order No. 18372–Phila–44) before the coupling coils were changed. These radio sets bear serial numbers 1 to 17 inclusive, 19 to 41 inclusive, and 43 to 87 inclusive. The doublet antenna kits supplied with these 85 radio sets are equipped with Coil Units C–451, C–452, and C–453. These coupling coils are designed to fit inside the p-a tank coils of the transmitter. The desired degree of coupling to the antenna is obtained by moving the coupling coils in or out of the p-a tank coil.

b. All doublet antenna kits except those mentioned in subparagraph *a* above are supplied with Coil Units C–387–D, C–388–C, C–389–C, C–390–C, C–447–B, C–448–B, and C–449–B. These coil units have a variable coupling link and replace the fixed link p-a tank coils previously supplied with the transmitter.

c. As soon as circumstances will permit, Radio Sets SCR–399–A and SCR–499–A will be delivered with the variable link tank coils listed above instead of with the old fixed link tank coils. When the doublet antenna kit is issued for use with such sets, either the oils will be omitted from the kit or, if issued, should be returned to stock.

Section VII. TROUBLE SHOOTING

171. General Trouble-Shooting Information

No matter how well equipment is designed and manufactured, faults occur in service. When such faults occur, the repairman must locate and correct them as rapidly as possible. This section contains general information to aid personnel engaged in the important duty of trouble shooting.

a. TROUBLE-SHOOTING DATA. Take advantage of the material supplied in this manual to help in the rapid location of faults. Consult the following trouble-shooting data when necessary:

(1) Block diagram of Radio Sets SCR–399–A and SCR–499–A. (See fig. 96.)

(2) Complete schematic diagrams. (See figs. 120 through 124.)

(3) Simplified and partial schematic diagrams. These diagrams are particularly useful in trouble shooting, because the repairman can follow the electrical functioning of the circuits more easily than on the regular schematics, thus speeding trouble location.

(4) Voltage and resistance data for all socket connections.

(5) Illustrations of components. Front, top, and bottom views which aid in locating and identifying parts.

(6) Pin connections. Pin connections on sockets, plugs, and receptacles are numbered or lettered on the various diagrams.

(*a*) Seen from the bottom, pin connections are numbered in a clockwise direction around the sockets. On octal sockets the first pin clockwise from the keyway is the No. 1 pin.

(*b*) Plugs and receptacles are numbered on the side to which the associated connector is attached. To avoid confusion, some individual pins are identified by letters which appear directly on the connector.

b. TROUBLE-SHOOTING STEPS. The first step in servicing a defective radio set is to sectionalize the fault. *Sectionalization* means tracing the fault to the component or circuit responsible for the abnormal operation of the set. The second step is to localize the fault. *Localization* means tracing the fault to the defective part responsible for the abnormal condition. Some faults such as burned-out resistors, r-f arcing,

and shorted transformers can be located by sight, smell, and hearing. The majority of faults, however, must be located by checking voltage and resistance.

c. SECTIONALIZATION. Careful observation of the performance of the radio set while turning the equipment on often sectionalizes the fault to the transmitter or the receiver, and careful observation of the meters on the transmitter front panel often determines the stage or circuit at fault. Additional sectionalizing of the fault will be discussed in paragraphs 178 and 179.

d. LOCALIZATION. Paragraphs 178 and 180 through 182 describe the method of localizing faults within the individual components. These paragraphs include trouble-shooting charts which list abnormal symptoms and their probable causes. The charts also give the procedure for determining which of the probable locations of the fault is the exact one. In addition, there are a number of drawings which show the resistance and voltage at every socket pin connection.

172. Voltage Measurements

a. GENERAL. Voltage measurements are an almost indispensable aid to the repairman, because most troubles either result from abnormal voltage or produce abnormal voltages. Voltage measurements are taken easily, because they are always made between two points in a circuit and the circuit need not be interrupted.

(1) Unless otherwise specified, the voltages listed on the voltage charts are measured between the indicated points and ground.

(2) Always begin by setting the voltmeter on the highest range so that the voltmeter will not be overloaded. Then, if it is necessary to obtain increased accuracy, set the voltmeter to a lower range.

(3) In checking cathode voltage, remember that a reading can be obtained when the cathode resistor is actually open. The resistance of the meter may act as a cathode resistor. Thus, the cathode voltage may be approximately normal only as long as the voltmeter is connected between cathode and ground. Before the cathode voltage is measured, make a resistance check with a cold circuit to determine whether the cathode resistor is normal.

b. PRECAUTIONS AGAINST HIGH VOLTAGE. Certain precautions must be followed when measuring voltages above a few hundred volts. High voltages are dangerous and can be fatal. When it is necessary to measure high voltages, observe the following rules:

(1) Connect the ground lead to the voltmeter.

(2) Place one hand in your pocket. This will eliminate the possibility of making accidental contact with either ground or another part of the circuit and causing the electricity to travel from one hand to the other.

(3) If the voltage is less than 300 volts, connect the test lead to the hot terminal (which may be either positive or negative with respect to ground).

(4) If the voltage is greater than 300 volts, shut off the power, connect to the hot lead, step away from the voltmeter, turn on the power, and note the reading on the voltmeter. Do not touch any part of the voltmeter, particularly when it is necessary to measure the voltage between two points which are above ground.

c. VOLTMETER LOADING. It is essential that the voltmeter resistance be at least 10 times as large as the resistance of the circuit across which the voltage is measured. If the voltmeter resistance is comparable to the circuit resistance, the voltmeter will indicate a voltage lower than the actual voltage present when the voltmeter is removed from the circuit.

(1) The resistance of the voltmeter or any range can always be calculated by the following simple rule: Resistance of the voltmeter equals the ohms per volt multiplied by the full-scale range in volts. For example: The resistance of a 1,000-ohm-per-volt meter on the 300-volt range is 300,000 ohms ($R = 1{,}000$ ohms per volt times 300 volts $= 300{,}000$ ohms).

(2) To minimize the voltmeter loading in high-resistance circuits, use the highest voltmeter range. Although only a small deflection will be obtained (possibly only 5 divisions on a 100-division scale), the accuracy of the voltage measurement will be increased. The decreased loading of the voltmeter will more than compensate for the inaccuracy which results from reading only a small deflection on the scale of the voltmeter.

(3) When a voltmeter is loading a circuit, the effect can always be noted by comparing the voltage reading on two successive ranges. If the voltage readings on the two ranges do not agree, voltmeter loading is excessive. The

reading (not the deflection) on the highest range will be greater than that on the lowest range. If the voltmeter is loading the circuit heavily, the deflection of the pointer will remain nearly the same when the voltmeter is shifted from one range to another.

(4) The ohm-per-volt sensitivity of the voltmeter used to obtain the readings recorded on the voltage and resistance charts in this manual is printed on each chart. Use a meter having the same ohm-per-volt sensitivity; otherwise it will be necessary to consider the effect of loading.

173. Resistance Measurements

a. NORMAL RESISTANCE VALUES. When a fault develops in a circuit, its effect will often show up as a change in the resistance values. To assist in the localization of such faults, trouble-shooting data includes the normal resistance values as measured at the tube sockets and at key terminal points. These values are measured between the indicated points and ground, unless otherwise stated. Often it is desirable to measure the resistance from other points in the circuit to determine whether the particular points in the circuit are normal. The normal resistance values at any point can be determined by referring to the resistance values shown in the schematic diagram, or by use of the resistor color code. (See fig. 154.)

b. PRECAUTIONS. (1) Before making any resistance measurements, turn off the power. An ohmmeter is essentially a low-range voltmeter and battery. If the ohmmeter is connected to a circuit which already has voltages in it, the needle will be knocked off scale and the voltmeter movement may be burned out.

(2) Capacitors must always be discharged before resistance measurements are made. This is very important when checking power supplies that are disconnected from their load. The discharge of the capacitor through the meter will burn out its movement, and in some cases may endanger life.

c. CORRECT USE OF LOW AND HIGH RANGES. It is important to know when to use the low-resistance range and when to use the high-resistance range of an ohmmeter. When checking the circuit continuity, the ohmmeter should be set on the lowest range. If a medium or high range is used, the pointer may indicate zero ohms, even if the resistance is as high as 500 ohms. When checking high resistances or measuring the leakage resistance of capacitors or cables, the highest range should be used. If a low range is used, the pointer will indicate *infinite* ohms, even though the actual resistance is less than a megohm.

d. PARALLEL RESISTANCE CONNECTIONS. In a parallel circuit the total resistance is less than the smallest resistance in the circuit. This is important to remember when trouble shooting with the aid of a schematic diagram.

(1) When a resistance is measured and the value is found to be less than expected, make a careful study of the schematic to be certain that there are no resistances in parallel with the one that has been measured. Before replacing a resistor because its resistance measures too low, disconnect one terminal from the circuit and measure its resistance again to make sure that the low reading does not occur because some part of the circuit is in parallel with the resistor.

(2) In some cases it will be impossible to check a resistor because it has a low-voltage transformer winding connected across it. If the resistor must be checked, disconnect one terminal from the circuit before measuring its resistance.

e. CHECKING GRID RESISTANCE. When grid resistance is checked, a false reading may be obtained if the tube is still warm and the cathode is emitting electrons. Allow the tube to cool, or reverse the ohmmeter test leads so that the negative ohmmeter test lead is applied to the grid.

f. TOLERANCE VALUES FOR RESISTANCE MEASUREMENTS. *Tolerance* means the normal difference that is expected between the rated value of the resistor and its actual value.

(1) Most resistors that are used in radio circuits have a tolerance of at least 20 percent. For example, the grid resistor of a stage might have a rated value of 1 megohm. If the resistor were measured and found to have a value between 0.8 and 1.2 megohms, it would be considered normal. As a rule, the ordinary resistors used in circuits are not replaced unless their values are off more than 20 percent. However, in some cases precision resistors and potentiometers are used. When a resistor is used whose value must be very close to its rated value, the tolerance is usually stated on the diagram or the maintenance parts list.

(2) The tolerance values for transformer

windings are generally between 1 and 5 percent. As a rule, suspect a transformer which shows a resistance deviating more than 5 percent from its rated value. Allow the transformer to cool off before the resistance test is made.

g. HIGH-RESISTANCE MEASUREMENTS. Many leakages will not show up when measured at low voltages. Most ohmmeters use a maximum test voltage of 15 volts on the highest resistance range. Where it is necessary to measure resistance above a few megohms or the leakage resistance between conductors of a cable, the test should be made using an applied voltage of 100 volts or more. If it is possible to ground one end of the resistance being checked, one of the low-voltage power supplies in the equipment can be used to provide about 300 volts for making these high-resistance measurements. The manner in which such measurements are made is indicated in figure 106. This method should be used only when the resistance being measured is very high. Be careful not to handle the meter after the circuit has been completed. The meter used should have an ohm-per-volt sensitivity of 1,000 ohms or more. The resistance of the meter is equal to the ohm-per-volt sensitivity multiplied by the range to which the meter is set. The derivation of the formula $R_x = \frac{300R_m}{V}$ is shown below. R_x is the unknown resistance, R_m is the meter resistance, and V is the voltmeter reading.

$$\frac{R_x}{R_m} = \frac{300-V}{V}$$

If R_x is very large, V will be small in comparison to 300. Assuming that 300–V can be replaced by 300, the formula $\frac{R_x}{R_m} = \frac{300}{V}$ is obtained. When solved for R_x this gives $R_x = \frac{300R_m}{V}$.

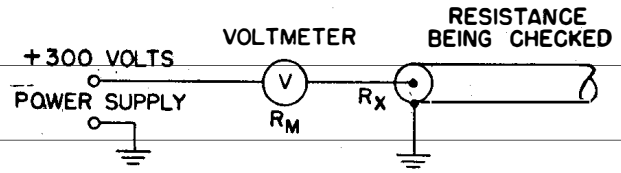

$$R_X = \frac{300}{V} R_M \text{ (APPROX.)}$$

EXAMPLE

V= 5 VOLTS. THE METER IS USED ON ITS 300 VOLT RANGE AND HAS A RESISTANCE OF 1,000 OHMS-PER-VOLT.

$$R_M = 300 \times 1{,}000 = 300{,}000 \text{ OHMS.}$$

$$R_X = \frac{300}{5} \times 300{,}000 = 18 \text{ MEGOHMS.}$$

TL35530

Figure 106. Measurement of high resistance.

When making the measurement, the meter should first be put on the 300-volt scale to protect it in case R_x is very low. If the voltage used is not 300 volts, the correct value should be inserted in the formula in place of 300.

174. Capacitor Tests

Capacitors which are leaky or shorted can be found by resistance checks of the stage. A capacitor which is suspected of being open can best be checked by shunting a good capacitor across it. In i-f (intermediate-frequency) circuits, keep the lead to the capacitor as short as the original capacitor leads. In l-f (low-frequency) circuits (less than 1 megacycle), the test capacitor leads may be several inches long. A capacitor color code is shown in figures 152 and 153 for checking the capacitor value against the value shown on the circuit diagram.

175. Current Measurements

Current measurements, other than those indicated by panel meters, are not ordinarily required in trouble shooting in the radio set. Under special circumstances, where the voltage and resistance measurements by themselves are not sufficient to localize the trouble, a current measurement can be made by opening the circuit and connecting an ammeter to measure the current. This procedure is not recommended except in very difficult cases.

a. When the meter is inserted in a circuit to measure current, it should always be inserted away from the r-f end of the resistance. For example, when measuring *plate* current, do not insert the meter next to the plate of a tube, but insert it next to the end of the resistor which connects to the power. This precaution is necessary to keep the meter from upsetting the r-f voltages.

Caution: A meter has least protection against damage when it is used to measure current. Always set the current range to the highest value. Then if necessary, decrease the range to give a more accurate reading. Avoid working close to full-scale reading because this increases the danger of overload.

b. In most cases, the current to be measured flows through a resistance which is either known or can be measured with an ohmmeter.

The current flowing in the circuit can be determined by dividing the voltage drop across the resistor by its resistance value. The drop across the cathode resistor is a convenient method of determining the cathode current.

176. Tube Checking

Tube checkers are used to check the emission of electrons from the cathode and to test for shorted elements. Tube checkers will not test the performance of high-voltage tubes, rectifiers, or some special tubes in the modulator and rectifier. Tube checkers are useful, however, for checking receiving-type tubes used in the various components.

a. Results obtained from a tube checker are not always conclusive, because the conditions are not the same as those under which the tube operates in the set. For this reason, the final test of a tube must be its replacement with a tube which is known to be good. In many cases it is quicker and more reliable to replace a suspected tube with a good one than to check it with the tube checker.

b. An operating chart and an instruction book or technical manual are provided with the tube checker. This chart indicates the setting of the tube checker for each tube type. The number of controls, their arrangement, and their settings vary with different types of tube checkers.

177. Analyzer BC–1052–E

a. GENERAL. Analyzer BC–1052–E is packed in Chest CH–89–A. Directions for setting the analyzer will be found on the chart in the cover of the chest. This equipment can be used for the following purposes:

(1) Voltage measurements, both direct and alternating, from less than 1 to 3,000 volts.

(2) Continuity tests.

(3) Determining values of resistors, 0 to 10 megohms.

(4) D-c measurements from 0.1 ma to 15 amperes.

b. RESISTANCE MEASUREMENTS. To test any resistor—

(1) Set the analyzer switches and make test prod connections as indicated in the chart for the range into which the resistor falls.

(2) Short the test prods and adjust the meter for full-scale deflection (zero ohms) by use of OHMS ADJUST knob.

(3) Touch the test prods to the ends of the resistor, at least one end of which should be disconnected from the circuit.

(4) Read the ohms on the OHMS scale, and multiply that reading by the value indicated on the ohms range on the rotary selector switch.

Note. The ohms adjustment must be made every time the range switch is changed from one range to another.

c. MEASUREMENT OF ALTERNATING AND DIRECT VOLTAGES.

Caution: Whenever the approximate voltage, current, or db level is unknown, always begin measurements with the highest range to prevent damaging the instrument by an overload.

(1) Refer to the chart for correct settings of controls, switches, jacks, and test prods before making any measurements.

(2) The DECIBEL calibration is for use across 500-ohm lines and loads. The scale is read directly in db.

(3) The OUTPUT jacks are for measuring the voltage or db level of any a-c or audio voltage. Internal circuits are made through a 0.1-mf isolating capacitor inside the instrument, and in such cases alternating current or audio superimposed on a d-c voltage may be read without harm to the analyzer.

d. HIGH-VOLTAGE MEASUREMENTS.

Warning: It is extremely dangerous to make this measurement. Contact with the high voltage in Radio Transmitter BC–610–E may be fatal. Do not make this measurement except as a last resort, and then always arrange to have someone else present. The recommended procedure for measuring the high voltage is as follows:

(1) Insulate the analyzer well above ground by placing it on dry boards or other insulating material at least 1 inch thick.

(2) Set analyzer controls to proper positions for measuring 3,000 volts as indicated on the analyzer chart.

(3) Remove coil unit L_7.

(4) Place red (positive) test lead prod into center jack of the jack bar of the coil unit.

(5) Connect black (negative) test lead to any convenient ground on the transmitter frame.

(6) Open right-hand cover door (over tuning units) to open its interlock switch. (This switch will be used to close the circuit (13) below).

(7) Fasten down the interlock switch at the left-hand cover door so that it is closed.

(8) See that the back screen is in place so that its interlock is closed.

(9) Arrange the red (positive) test prod and cord so that the cord is extremely well insulated. The cord should be carefully supported so that it is free and clear of the door and frame of the transmitter and any components.

(10) Stand clear of the red (positive) test lead and see that no one comes in contact with it when voltage is on.

(11) Set PLATE POWER switch of the transmitter at ON.

(12) Put your left hand in your pocket.

(13) With your right hand, turn on the high voltage by pressing the interlock switch at the right-hand cover door.

(14) Read the voltage indication on the analyzer and release the interlock switch.

(15) Set PLATE POWER switch to OFF and remove fastening from left-hand cover interlock when finished.

e. INTERNAL BATTERIES. The self-contained batteries of the analyzer consist of two 7½-volt C batteries (Batteries BA–34), one 1½-volt heavy-duty dry cell (Batteries BA–34), and one 1½-volt heavy-duty dry cell (Battery BA–30). These may be replaced by removing the four screws from the front panel. Remove the batteries by loosening the screws holding the brackets which hold the batteries in place. Be sure to observe the polarity when replacing batteries. The 1½-volt battery is held in place by spring clamps. Be sure to cut out a section of the battery paper cover to permit a good connection to the zinc shell.

178. Trouble-Shooting Procedures

Caution: Do not change fuses or make repairs with the high voltages on, for under this condition a potential of 2,000 to 2,500 d-c volts is present on all three decks of the transmitter.

a. Failure of this equipment to operate properly will usually be caused by one or more of the following faults.

(1) Improperly connected power cable between Power Unit PE–95–( ) and Shelter HO–17–A.

(2) Worn, broken, or disconnected cords or plugs.

(3) Defective fuses.

(4) Burned relay contacts due to overloads.

(5) Wires broken from excessive vibration.

(6) Defective tubes.

(7) Inactive (dirty or cracked) crystal.

b. When failure is encountered and the cause is not immediately apparent, check the above items before starting a detailed examination of the component parts of the system.

c. Check fuses at an early stage in trouble shooting. Do not continue to burn out fuses before looking elsewhere to determine the basic source of the trouble. Insertion of an electric lamp in place of a fuse will often prove helpful in tracing the source of the trouble if fuses continue to burn out.

d. The cause of the trouble can usually be traced to the component at fault by means of the meters and controls on the equipment itself. The use of the schematic diagrams and a logical system of reasoning will almost always isolate the fault. For example: If the transmitter cannot be keyed from either KEY jack or Junction Box JB–70–A, the trouble might be in the 12-volt power supply, relay RY_{200}, switch SW_{203}, the cording from the junction box to the speech amplifier, the cord from the speech amplifier to the transmitter, or the transmitter itself. To isolate the trouble proceed as follows:

(1) Switch the BATTERY SOURCE switch on Junction Box JB–70–A to the other 12-volt source. If this does not clear the trouble, the 12-volt supply is probably not at fault.

(2) Plug the key into the KEY jack on the speech amplifier and try to key the set. If the transmitter cannot be keyed, the trouble is in the junction box or the connecting cord. If the transmitter still cannot be keyed, the trouble is in the cord from the speech amplifier to the transmitter or in the transmitter.

(3) Throw the EXCITER PLATE POWER switch on the transmitter to ON. If no excitation is indicated on the EXCITATION METER the trouble is in the transmitter.

179. Trouble-Shooting Charts

The accompanying trouble-shooting charts, if properly used, simplify trouble shooting. There are four charts. The first chart covers the sectionalization of trouble in Radio Sets SCR–399–A and SCR–499–A. This chart lists the various symptoms which may be recognized easily by the operator, and gives the probable location for the existing trouble as well as the recommended correction. It tells the operator whether the trouble is in the transmitter, the receivers, the speech amplifier, the junction box, or the power supply. By proper use of this chart, the operator can isolate the trouble to

one particular component of the equipment, and thus save time that might otherwise be lost in checking components that are free of trouble. The second chart shows the localization of trouble in Radio Transmitter BC–610–E. This chart will aid in determining which stage in the transmitter is at fault, and will aid in localizing the trouble to the individual part in the circuit which is causing the abnormal condition. The third and fourth charts are similar to the second, except that they deal with localizing the trouble in Speech Amplifier BC–614–E and Junction Box JB–70–A respectively. Therefore, the first chart will be used mainly by the operator, whereas the last three, covering trouble shooting within the various components, will be used by the repairman.

180. Sectionalizing Trouble in Radio Sets SCR–399–A and SCR–499–A

Symptoms	Probable trouble	Corrections
1. Power Unit PE–95–( ) fails to start when START button is pressed	1. Discharged battery in power unit might operate start relay, but fails to turn over the engine	1. Start power unit with hand crank See TM 11–904
	Broken wire in power cord or bad connection at plug	Repair cord or connection
	START and STOP leads interchanged or disconnected either at Junction Box JB–70–A or at trailer terminal board	Connect leads properly
2. Power unit starts, but no power is available at Radio Set SCR–399–A or SCR–499–A	2. Loose socket connection. Circuit breaker defective or circuit breaker not closed	2. Tighten connection. Replace or close circuit breaker
3. No filament power when FILAMENT POWER switch is set to ON	3. Fuse FS_1, FS_2, or FS_4 open. FILAMENT POWER switch, defective	3. Replace open fuse. Replace switch
	Damaged Cord CD–763 or poor plug connections	Repair cord or connection
	Filament resistor R_{18} defective	
4. Low or zero reading on ANTENNA CURRENT meter	4. Incorrect control setting on Antenna Tuning Unit BC–939–A.	4. Set control according to tuning chart
	Sections of transmitting antenna missing	Replace missing sections
	Insufficient antenna coupling	Increase antenna coupling
5. No grid excitation indicated when EXCITATION METER switch is set to P.A. GRID position (assuming intermediate amplifier is operating properly)	5. Tube V_{16} defective or improperly inserted	5. Replace tube or insert tube properly
	Open r-f choke CH_{g_2}	
	Adjustable resistor R_{11} defective	
6. No plate current indicated on P.A. PLATE meter. Necessary grid current present. HIGH VOLTAGE PROTECT switch set to HIGH VOLTAGE PROTECT	6. TRANS. ON-OFF switch on Junction Box JB–70–A not thrown to TRANS. ON position	6. Throw switch to ON
	Reset necessary on overload relay	Press OVERLOAD RESET switch.
	Open fuse FS_3	Replace fuse
	Interlock switches not closed	Close panels on top of transmitter tightly
	Short in high-voltage circuit continually tripping overload relay	Check high-voltage circuit
	Rectifier tube V_6 or V_7 defective	Replace defective tube
	Missing or improperly installed coil unit on jack bar	Install coil unit properly
	Resistor R_{19} defective, or loose in socket	Replace resistor R_{19}, or tighten
7. Excessive plate current indicated on P.A. PLATE meter	7. Improper tuning of tank circuit	7. Tune tank circuit according to tuning chart
	Wrong coil unit	Use proper coil unit
	Failure to use vacuum capacitor C_{28} when operating below 2.5 mc	Install capacitor C_{28}
	Excessive antenna coupling	Reduce coupling
	No bias voltage due to open fuse FS_5 or tube V_5 defective	Replace fuse FS_5 or tube V_5
8. PLATE POWER switch thrown to OFF. P.A. PLATE meter indicates plate current still flowing	8. Contacts on relay RY_1 sticking because of severe overload	8. Clean contacts of relay RY_1 *Caution:* Leave plug out of socket SO_6 when working on this relay
9. No excitation indicated by EXCITATION METER when EXCITER PLATE POWER switch is set to ON position	9. Tuning unit improperly seated in socket	9. Insert tuning unit firmly in socket
	Tube V_8 or V_9 defective	Replace tube
	EXCITER PLATE POWER switch defective	
	BAND SWITCH not set to proper channel	Set switch to proper channel
10. Transmitter functioning normally. Radio Receivers BC–312–( ) and BC–342–( ) fail to disable during transmission	10. RECEIVER DISABLING switches not turned to ON position	10. Turn switch to ON position
	Junction Box JB–70–A not functioning properly	See paragraph 182.

181. Localizing Trouble in Radio Transmitter BC–610–E

Symptoms	Probable trouble	Corrections
1. FILAMENT POWER switch thrown to ON position. Green lamp does not light. FIL. VOLTAGE meter indicates filament voltage	1. Lamp LM_3 burned out	1. Replace lamp
2. FILAMENT POWER switch thrown to ON position. Green lamp does not light. No voltage indicated by FIL. VOLTAGE meter	2. Fuse FS_1, FS_2 or FS_4 burned out FILAMENT POWER switch defective Damaged power Cord CD–763, or poor contacts at sockets SO_{201} or SO_6	2. Replace fuse Replace switch Repair cord or sockets
3. FILAMENT POWER switch at ON position. Green lamp lights. No voltage indicated on FIL. VOLTAGE meter	3. Tube V_{13}, V_{14}, or V_{15} not in sockets Filament resistor R_{18} defective	3. Place tubes in sockets Replace resistor R_{18}
4. FILAMENT POWER switch at ON position. Green lamp lights. FIL. VOLTAGE meter indicated filament power present. Tubes V_1, V_2, and V_5 not lighted	4. Fuse FS_5 open	4. Replace fuse FS_5
5. EXCITER PLATE POWER switch at ON position. No intermediate-amplifier grid current indicated when EXCITATION METER SWITCH is at INT. AMP. GRID position. Tuning unit set according to tuning chart. M.O.–XTAL switch and BAND SWITCH at proper positions	5. Switch SW_3 defective Tube V_8 or V_9 defective Defective rectifier tube V_{12} Open resistor R_8 or choke CH_7	5. Replace switch Replace defective tube Replace defective tube Replace defective part

182. Localizing Trouble in Junction Box JB–70–A

Symptoms	Probable trouble	Corrections
1. TRANS. ON-OFF switch at the TRANS. OFF position during c-w operation. No plate current indicated on P.A. PLATE meter when transmitter is keyed	1. Contacts of switch SW_{203} closing circuit of relay RY_1 fail to close	1. Repair, adjust, and clean contacts
	Relay RY_{200} fails to function	12-volt power supply lacking Repair relay RY_{200}
	Wiring from SW_{203} to PL_{200} defective	Repair wiring
	Contacts of relay RY_{200} in circuit of the cathode of oscillator tube V_8 fail to close	Repair, clean, or adjust contacts
2. Press-to-talk switch is depressed during phone operation. No plate current indicated on P.A. PLATE meter	2. Relay RY_{200} fails to function	2. Repair or replace relay RY_{200}
	Press-to-talk switch defective	Repair or replace switch, or replace microphone
	12-volt power supply for energizing relay RY_{200} lacking	Repair 12-volt power supply from Power Unit PE–95–( ) Switch to auxiliary battery supply
	Contacts of relay RY_{200} in the circuit of relay RY_1 fail to operate	Repair, clean, or adjust contacts of relay RY_{200}
3. Transmitter functioning normally on both c-w and phone operation. Radio Receivers BC–312–( ) and BC–342–( ) fail to disable during transmissions	3. RECEIVER DISABLING switch SW_{200} or SW_{201} not turned to ON position	3. Turn switch to ON position
	Switches SW_{200} and SW_{201} defective	Repair or replace switches SW_{200} and SW_{201}
4. Transmitter operating normally. Sidetone is not being received at Radio Receivers BC–312–( ) and BC–342–( )	4. C.W.–SIDETONE switch SW_{205} at OFF position	4. Turn C.W.–SIDETONE switch to TO BC–312 or to TO BC–342 position
	Relay contacts of RY_{200} in circuit of switch $SW_{205}B$ fail to close	Clean, adjust, or repair contacts of relay RY_{200}
5. Transmitter cannot be keyed during c-w operation from a remote position	5. REMOTE CONTROL EE–8 switch SW_{202} at incorrect position. (Also see 1 above)	5. Place switch SW_{202} at correct position
6. Transmitter cannot be modulated from a remote position	6. Capacitor C_{202} defective. TRANS. ON–OFF switch SW_{203} at incorrect position	6. Replace defective capacitor C_{202} Place TRANS. ON–OFF switch at TRANS. ON position
7. During remote operation the telephone is not being fed reception from Radio Receiver BC–312–( ) or BC–342–( )	7. TRANS. ON–OFF switch SW_{203} at an incorrect position REMOTE CONTROL EE–8 switch SW_{202} at incorrect position	7. Place TRANS. ON–OFF switch at REC. TO EE–8 position Turn REMOTE CONTROL EE–8 switch to correct position

183. Localizing Trouble in Speech Amplifier BC-614-E

Symptoms	Probable trouble	Corrections
1. FILAMENT POWER switch on transmitter power panel closed. Red lamp fails to light	1. Fuse FS_5 open, lamp LM_{101} burned out	1. Replace fuse FS_5, replace lamp LM_{101}
2. FILAMENT POWER switch at ON position, filament voltage present at all tubes, plate voltage lacking	2. Rectifier tube V_{107} defective Secondary 250-volt winding of transformer T_{103} burned out Shorted filter capacitor C_{108} or C_{109} Open filter choke CH_{101}	2. Replace tube V_{107} Replace transformer T_{103} Replace shorted capacitor Replace defective choke
3. Transmitter can be modulated by a dynamic microphone or Telephone EE-8-( ), but not by a carbon microphone	3. Resistor R_{110} or R_{123} defective Transformer T_{101} defective Shorted capacitor C_{120} or C_{110}	3. Replace defective resistor Replace transformer Replace capacitor
4. Transmitter can be modulated by a carbon microphone, but not by a dynamic microphone or Telephone EE-8-( )	4. Tube V_{101} defective Resistor R_{102} or R_{103} defective	4. Replace defective tube Replace defective resistor
5. Transmitter can be modulated by carbon or dynamic microphone, but not by Telephone EE-8-( )	5. Resistor R_{105} defective	5. Replace defective resistor
6. Filament voltage and plate power supplied to all tubes. Transmitter can be modulated. Sidetone lacking during c-w operation	6. Oscillator tube V_{106} defective Resistor R_{139}, R_{140}, R_{136}, R_{138}, or R_{137} defective Amplifier tube V_{108} defective Resistor R_{122} or R_{141} defective Capacitor C_{117} or C_{118} defective	6. Replace defective tube Replace defective resistor Replace defective tube Replace defective resistor Replace defective capacitor
7. Filament voltage and plate power supplied to all tubes. Transmitter can be modulated. Speech limiter fails to limit speech peaks.	7. LIMITER CONTROL R_{134} defective Speech limiter tube V_{105} defective Transformer T_{104} defective Capacitor C_{116} defective Capacitor C_{114} defective Resistor R_{109} defective	7. Replace resistor Replace tube Replace transformer Replace capacitor Replace capacitor Replace resistor

Section VIII. REPAIRS

184. Replacement of Parts

Careless replacement of parts often make new faults inevitable. Note the following points:

a. Before a part is unsoldered, note the position of the leads. If the part (such as a transformer) has a number of connections to it, tag each of the leads.

b. Be careful not to damage other leads by pulling or pushing them out of the way.

c. Do not allow drops of solder to fall into the set, since they may cause short circuits.

d. A carelessly soldered connection may create a new fault. Be very careful to make well-soldered joints, since a poorly soldered joint is one of the most difficult faults to find.

e. When a part is replaced in r-f or i-f circuits, place it exactly as the original one was placed. A part which has the same electrical value but different physical size may cause trouble in h-f (high-frequency) circuits. Give particular attention to proper grounding when replacing a part. Use the same ground point as in the original wiring. Failure to observe these precautions may result in decreased gain, or in oscillation of the circuit.

185. Replacement of Tubes

a. Tube V_{16} is removed as follows:

(1) Open the doors in the top of the transmitter over the plate coil and the tuning units.

(2) Take out the tuning units and remove tubes V_8 and V_9 from their sockets.

(3) Remove the grid lead from the grid cap on the side of tube V_{16} and the plate lead from the plate cap on top.

(4) Turn the tube counterclockwise until it can be lifted out of its socket.

(5) Remove the tube through the door over the tuning unit side of the transmitter.

b. Modulator tubes V_3 and V_4 are removed as follows:

(1) Remove the back screen.

(2) Take off the plate and grid leads from the caps.

(3) Turn the tube counterclockwise and lift it out of the socket.

c. High-voltage rectifier tubes V_6 and V_7 are removed as follows:

(1) Remove the back screen.

(2) Disconnect the plate lead from the cap.

(3) Turn the tube counterclockwise and lift it out of the socket.

d. To remove tubes V_{10}, V_{11}, and V_{12}, proceed as follows:

(1) Lift up the two doors in the top cover.

(2) Remove the tuning units.

(3) Loosen the clamp around the base of the tube with a screwdriver by reaching in through the door over the plate coil.

(4) Pull the tube straight up, gently rocking it from side to side.

186. Removal of Antenna Tuning Unit BC-939-A

To remove the antenna tuning unit proceed as follows:

a. Disconnect the antenna and ground leads.

b. Disconnect the coaxial cable leading from the transmitter.

c. Take off the four wingnuts holding the tuning unit to the top of the transmitter.

d. Lift the unit up and forward.

187. Removal of Top of Transmitter Cabinet

The top of the transmitter cabinet should be taken off when extensive work is to be done in the r-f section. Remove the antenna tuning unit first (par. 186); then proceed as follows:

a. Remove the eight bolts holding the top to the mounting straps.

b. Unscrew the four wing-head screws which secure the top to the cabinet.

c. Disconnect the two leads which are plugged in terminal strip TS_5 on the exciter deck.

d. Lift the cover clear from the cabinet.

188. Removal of R-F Section

The r-f section may be removed from the transmitter as follows:

a. Remove all tubes for safekeeping.

b. Disconnect the leads from terminals 1 and 3 on terminal strip TS_1 on the exciter chassis apron.

c. Disconnect the two leads to the coil of relay RY_4, and release them from the clamp on the side of the cabinet.

d. Disconnect the leads to meter M_2, and clear them from the bracket under the meter.

e. Disconnect the black lead to capacitor C_{12}.

f. Pull out plugs PL_1 and PL_2 from their sockets on the modulator deck, and release the laced cable from its bracket on the modulator chassis.

g. Remove the eight bolts which hold the r-f section to the straps of the cradle.

h. Remove the 14 bolts which fasten the r-f section to the modulator section.

i. Lift the r-f section off.

189. Removal of Chests From Shelter

Whenever it is necessary to remove any of the major components of Radio Set SCR-399-A from Shelter HO-17-A, move the truck in such a position as to jack-knife Trailer K-52-( ), so that the rear of the truck will become more readily accessible. If possible, disconnect the trailer.

a. REMOVAL OF CHEST CH-89-A (SEAT BENCH). Two men are required to remove Chest CH-89-A from the shelter.

(1) Unscrew the six wing-head bolts holding the chest to the floor.

(2) Lower the chest from the floor of the truck to the ground, holding it by its handles.

b. REMOVAL OF CHEST CH-88-A (WALL). Two men are required to remove Chest CH-88-A from the shelter.

(1) Remove cotter pins from trunk clamps.

(2) Unclasp all four trunk clamps.

(3) Remove chest by its handles.

c. REMOVAL OF CHEST CH-119-A. Two men are required to remove Chest CH-119-A from the shelter.

(1) Remove Chests CH-88-A and CH-89-A.

(2) Remove Tool Equipment TE-48 and Cord CD-652 from Chest CH-119-A to lighten weight.

(3) Unclasp the four trunk clamps.

(4) Slide chest to the door and lower to ground.

d. REMOVAL OF CHEST CH-120-E. Four men are required to remove Chest CH-120-E from the shelter.

(1) Disconnect all cords connecting Chest CH-121-A to Chest CH-120-A and close the cover of the latter.

(2) Disconnect Cord CD-659 from Chest CH-109-A.

(3) Disconnect all cords from the bottom of Junction Box JB–70–A.

(4) Disconnect ground straps from bottom of chest.

(5) Disconnect Cord CD–764 from front of Speech Amplifier BC–614–E, and remove cord.

(6) Loosen turnbuckles holding Chest CH–120–A to table frame after removing safety wires.

(7) Remove chest from table frame and lower to ground.

190. Removal of Radio Transmitter BC–610–E

Four men are required to remove Radio Transmitter BC–610–E from the shelter.

a. Remove Chest CH–89–A as described in paragraph 189.

b. Disconnect Cords CD–763 and CD–764 from their sockets on the rear of the transmitter.

c. Remove Antenna Tuning Unit BC–939–A from the top of the transmitter as described in paragraph 186.

d. Unscrew the four long wrench nuts holding the cradle of the transmitter to the floor of the shelter.

e. Move the transmitter and its cradle directly toward the right wall to the center of the shelter.

f. Move the transmitter around into the center aisle and toward the rear of the truck. (It will now be necessary to have three of the men on the ground to assist in lowering the transmitter from the floor of the shelter to the ground.)

g. Lower the transmitter directly to the ground by the four handles.

191. Replacement of Switches in Radio Transmitter BC–610–E

a. GENERAL. The method of removal and replacement of the majority of the switches in the transmitter is apparent upon inspection. It is important, however, that all leads to the switch be tagged before they are disconnected from the lugs or terminals.

b. REMOVAL OF BAND SWITCH SW_8. First remove the r-f section as described in paragraph 188. Rest the r-f section on its top, and remove bank switch SW_8 as follows:

(1) Disconnect all leads to the switch; tag each one.

(2) Remove the knob from the shaft by loosening the two setscrews.

(3) Remove the nut and washer from the shaft on the front of the panel.

(4) Remove the switch from the bottom of the exciter deck by unscrewing the five nuts which secure it to the deck.

(5) Replace in reverse order. When replacing the knob, see that the setscrew in the side of the handle engages the flat side of the shaft.

192. Replacement of Parts in Speech Amplifier BC–614–E

The parts of Speech Amplifier BC–614–E are easily accessible when the chassis is removed from the cabinet. To remove the chassis, disconnect the three cords from the front panel. Release the four winged panel locks and pull the chassis straight out of the cabinet.

a. LIMITER CONTROL R_{134}. To replace the limiter control, first loosen the resistor mounting strip just behind the control by unscrewing the two nuts holding the strip to its mounting. Move the strip to the rear. Unsolder the three leads to the control, and tag each. Unscrew the two nuts holding the control to the front of the chassis, and remove the control. Replace in reverse order.

b. MICROPHONE GAIN CONTROLS. To replace either microphone gain control, first disconnect the leads to the control. Remove the knob by loosening the setscrew holding it on the shaft. Remove the nut and washer securing the control to the panel, and take the control off the panel. Replace in reverse order.

193. Removal of Junction Box JB–70–A

To remove Junction Box JB–70–A from the cabinet, first disconnect all cords from the right side, front panel, and bottom of the chassis. Disconnect the grounding braid from the bottom of the chassis with a screw driver. Disconnect the remote telephone line, if connected. Disconnect the cord which connects the junction box to the speech amplifier from its socket on the panel of the speech amplifier. Release the four panel locks and pull the chassis forward. With a screw driver, disconnect the leads from terminal 9, 10, 11, and 12 on TS_{200}; and pull the cord through the rubber grommet in the right side of the junction box. Pull the chassis all the way out of the cabinet.

194. Rustproofing and Repainting

When the finish on the cabinets or panels of any of the components of Radio Set SCR–399–A or

SCR–499–A has been badly scarred or damaged, rust and corrosion can be prevented by touching up bared surface as follows:

a. Use #00 or #000 sandpaper to clean the surface down to the bare metal. Obtain a bright smooth finish.

Caution: Do not use steel wool to remove rust. Although it permits rapid removal of rust, minute particles of steel wool frequently enter the case and cause harmful internal shorting or grounding of circuits.

b. When a touch-up job is necessary, apply paint with a small brush. When numerous scars and scratches warrant complete repainting, remove rust from the case by cleaning corroded metal with dry-cleaning solvent. In severe cases it may be necessary to use dry-cleaning solvent to soften the rust and sandpaper to complete the preparation for painting. Paint used will be authorized and consistent with existing regulations.

195. War Department Unsatisfactory Equipment Report (fig. 151)

a. When trouble in equipment used by Army Ground Forces or Army Service Forces occurs more often than repair personnel feel is normal, War Department Unsatisfactory Equipment Report, WD AGO Form 468 should be filled out and forwarded through channels to the Office of the Chief Signal Officer, Washington 25, D. C. See TM 38–250 for complete instructions on the handling of this report.

b. When trouble in equipment used by Army Air Forces occurs more often than repair personnel feel is normal, Army Air Forces Form No. 54 should be filled out and forwarded through channels.

Section IX. ALIGNMENT AND ADJUSTMENT

196. Neutralization

a. Radio Transmitter BC–610–E has been adjusted for neutralization and will not require adjustment in the field, unless neutralizing capacitor C_{18} has been tampered with.

b. If necessary, readjustment may be made as follows:

(1) Install Tuning Unit TU–52 and associated Coil Unit C–390–A.

(2) Disconnect the two leads of the coaxial cable from the transmitter output terminals.

(3) Set the FILAMENT POWER switch at ON.

Note. In this operation high-voltage plate power is not applied. Therefore, leave the transmitter control switch on the Junction Box JB–70–A at TRANS. OFF, and set the PLATE POWER switch on the transmitter at OFF.

(4) Set EXCITATION METER switch at P.A. GRID.

(5) Set EXCITER PLATE POWER switch at ON.

(6) Adjust controls of tuning unit to resonance at some frequency near the h-f end of the range.

(7) Adjust the PLATE TUNING wheel slowly through resonance. (If neutralization is faulty, resonance will be indicated by a sharp dip in the reading of the GRID CURRENT meter.)

(8) Adjust neutralizing capicitor C_{18}, little by little, checking after each adjustment, until rotating the PLATE TUNING wheel through resonance causes only a slight dip in the reading of the GRID CURRENT meter. (When properly neutralized this dip will not exceed 3 ma.)

197. Modulation Limiter

a. The modulation limiter in Speech Amplifier BC–614–E has been properly set to provide a minimum of 3 db compression at 100 percent modulation, and no change in setting is recommended. Readjustment should be made only if the LIMITER CONTROL has been tampered with. No adjustment in the field is recommended unless an audio oscillator is available.

b. If necessary, adjustment of the modulation limiter is accomplished as follows:

(1) Disconnect Microphone T–50 from its socket on the panel of the speech amplifier.

(2) Connect a 400-cycle audio generator to terminals 1 and 3. The grounded side of the generator should be connected to terminal 1 of the socket. See figure 123 for socket SO_{101} connections.

(3) Turn on the transmitter and adjust it for phone operation.

(4) Remove the metal plate under the panel marking LIMITER CONTROL on the speech

amplifier. The screw adjustment for this control is under the plate.

(5) Turn the LIMITER CONTROL to the extreme counterclockwise position.

(6) Turn on the 400-cycle generator and adjust its output and the DYNAMIC MIC. 2 gain control for a MODULATOR PLATE meter reading of 225 ma.

(7) Turn the LIMITER CONTROL clockwise until the MODULATOR PLATE meter reads 160 ma.

(8) The modulation limiter has now been adjusted for normal operation. The metal plate should be put back in place and firmly secured. Reconnect Microphone T–50 and resume operation.

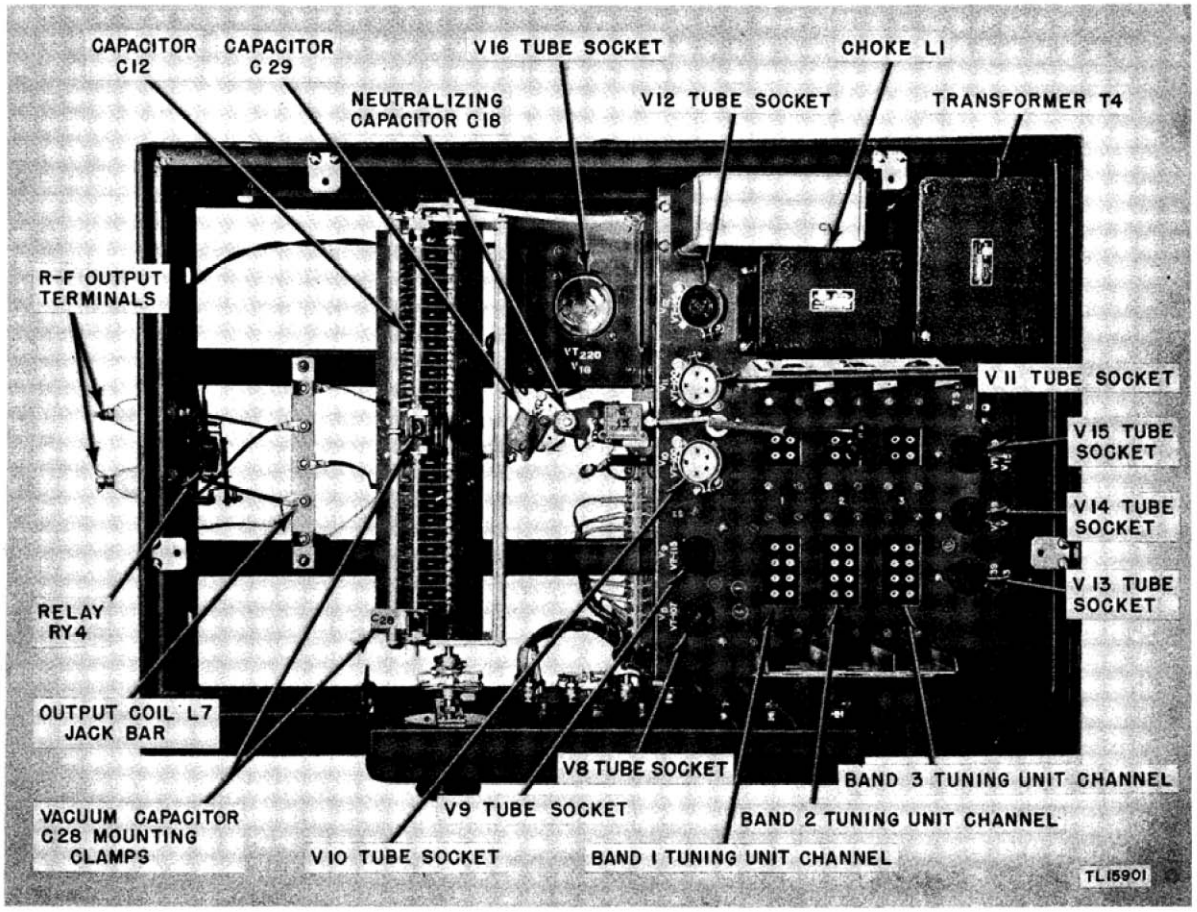

Figure 107. Radio Transmitter BC-610-E—top view of r-f deck.

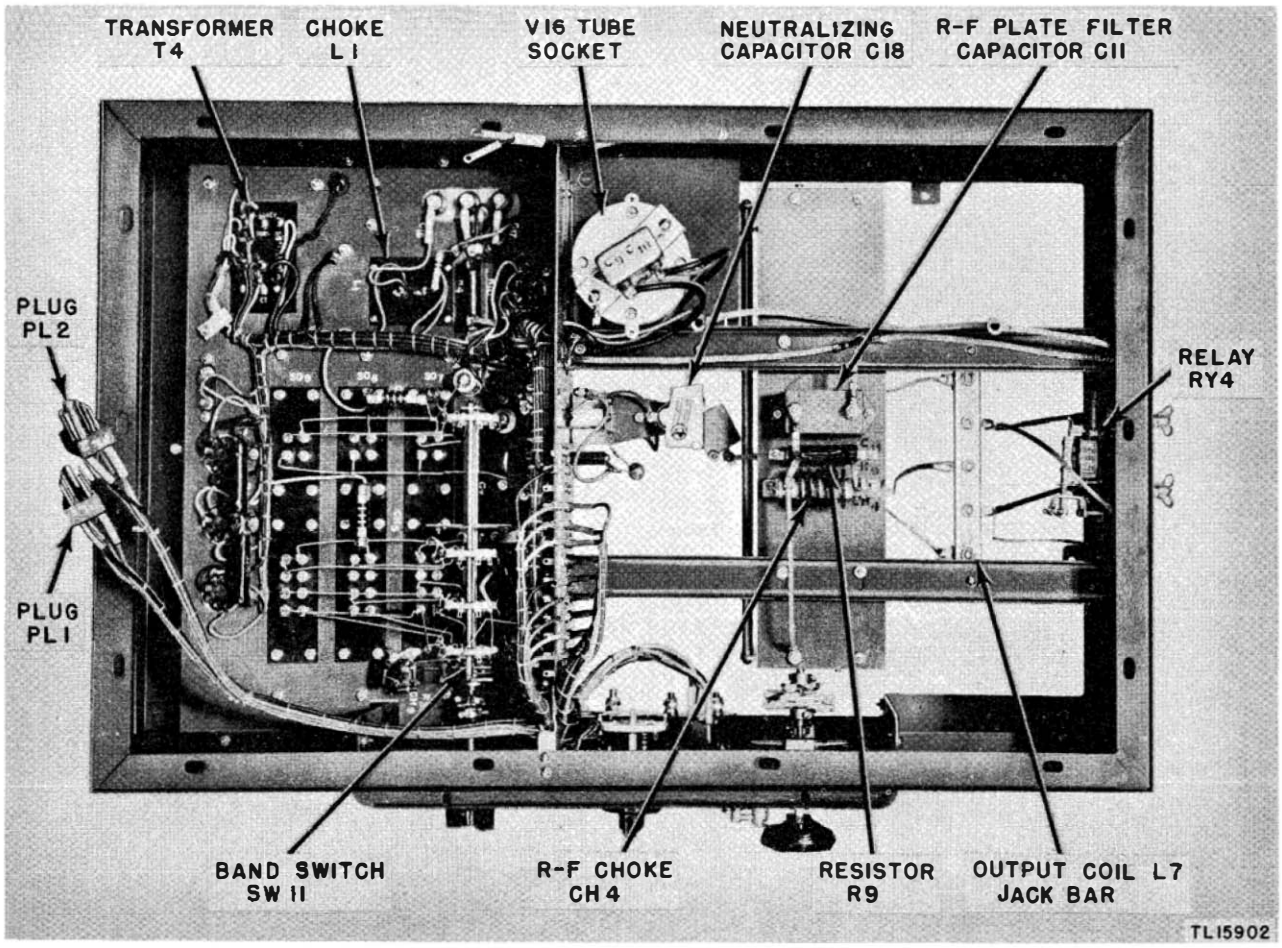

Figure 108. Radio Transmitter BC-610-E—bottom view of r-f deck.

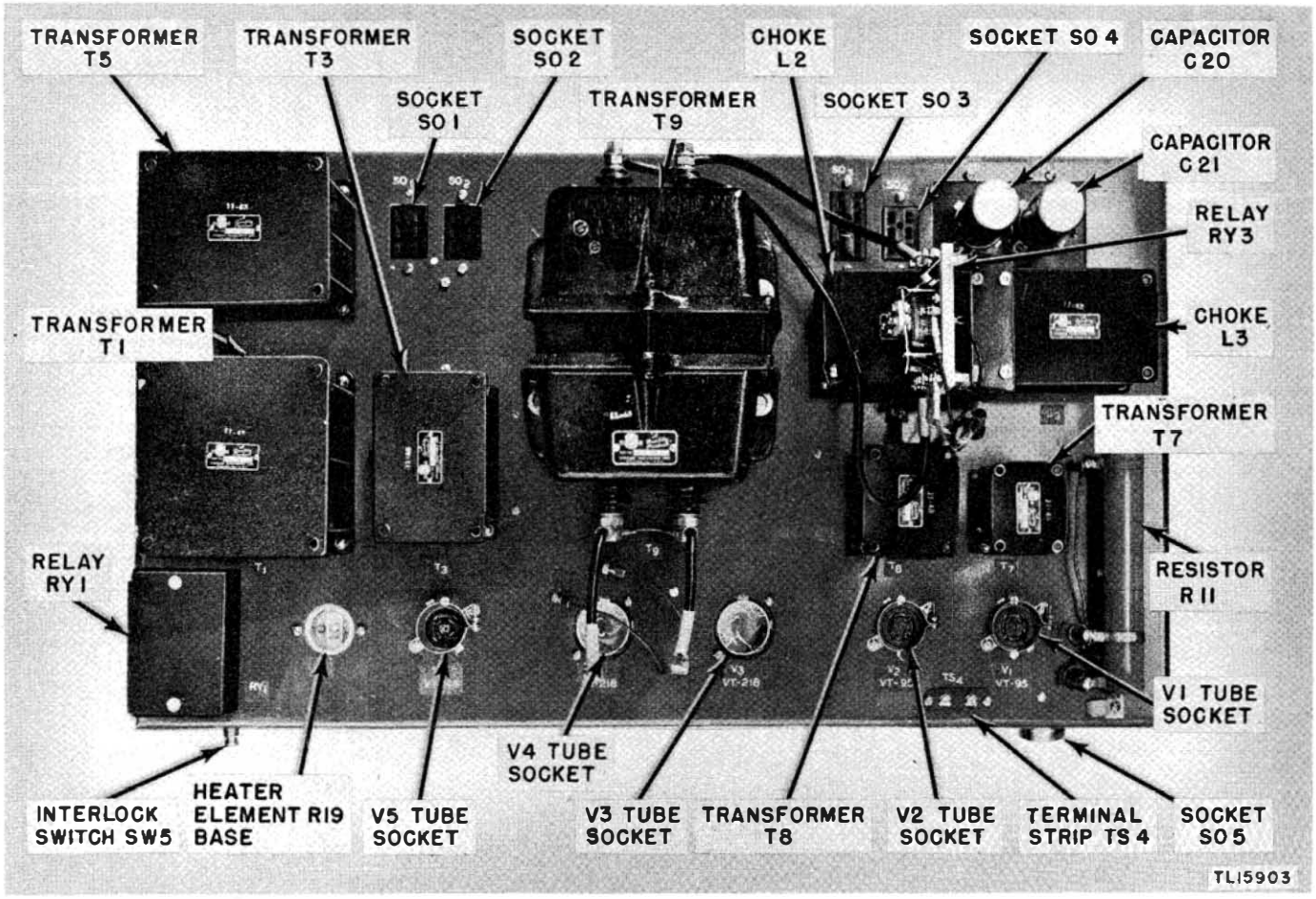

Figure 109. Radio Transmitter BC-610-E—top view of modulator deck.

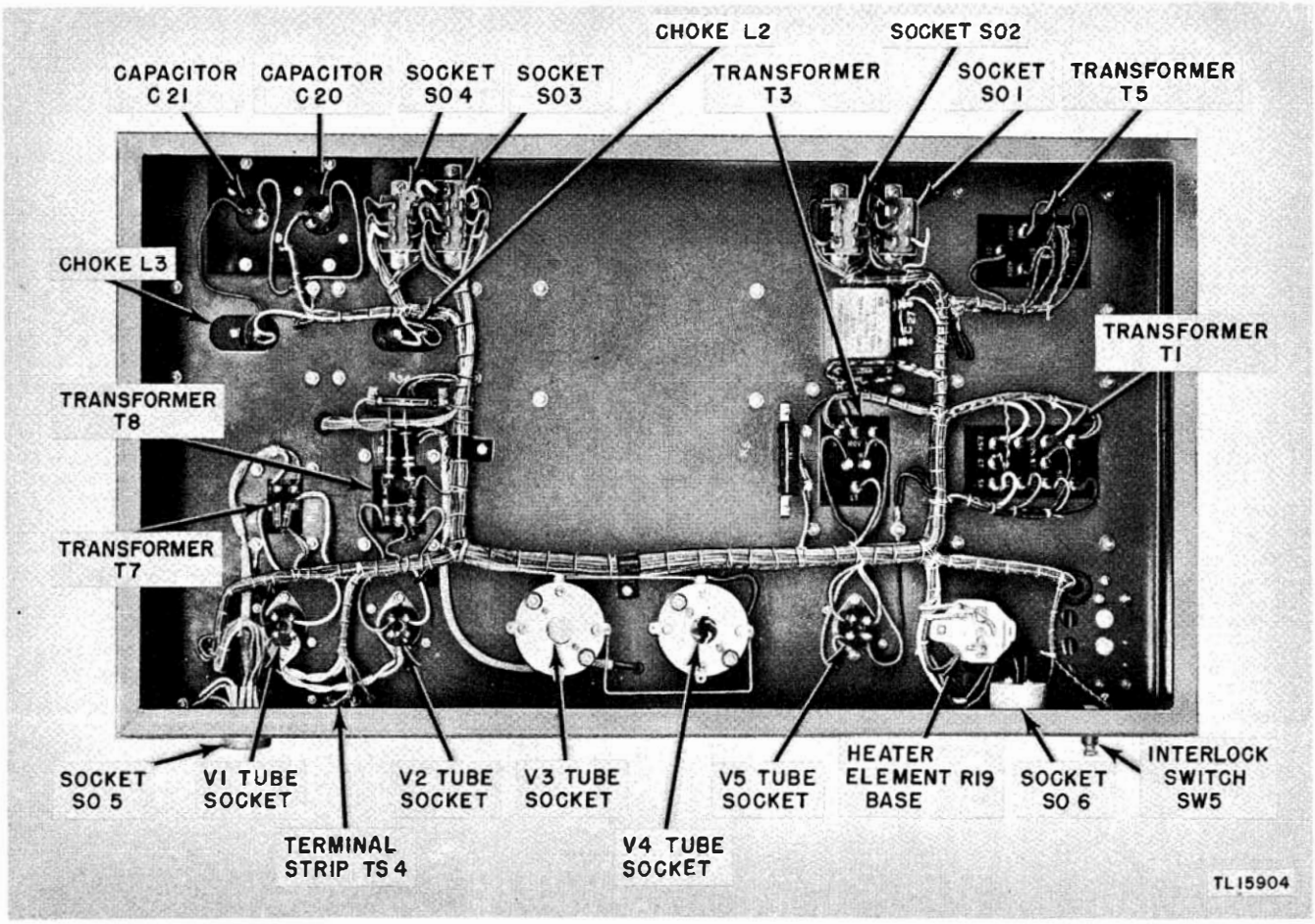

Figure 110. Radio Transmitter BC-610-E—bottom view of modulator deck.

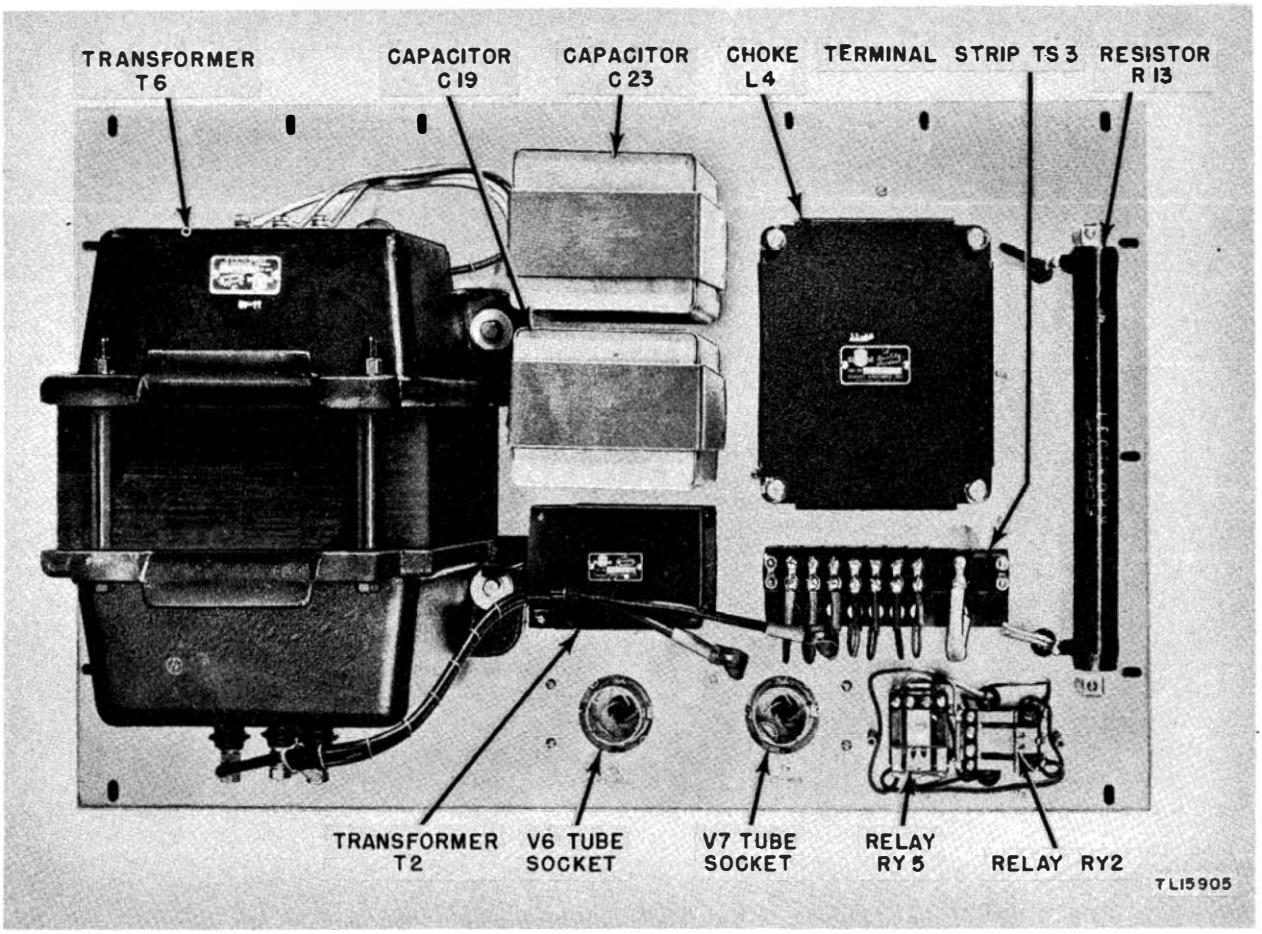

Figure 111. Radio Transmitter BC-610-E—top view of power-supply deck.

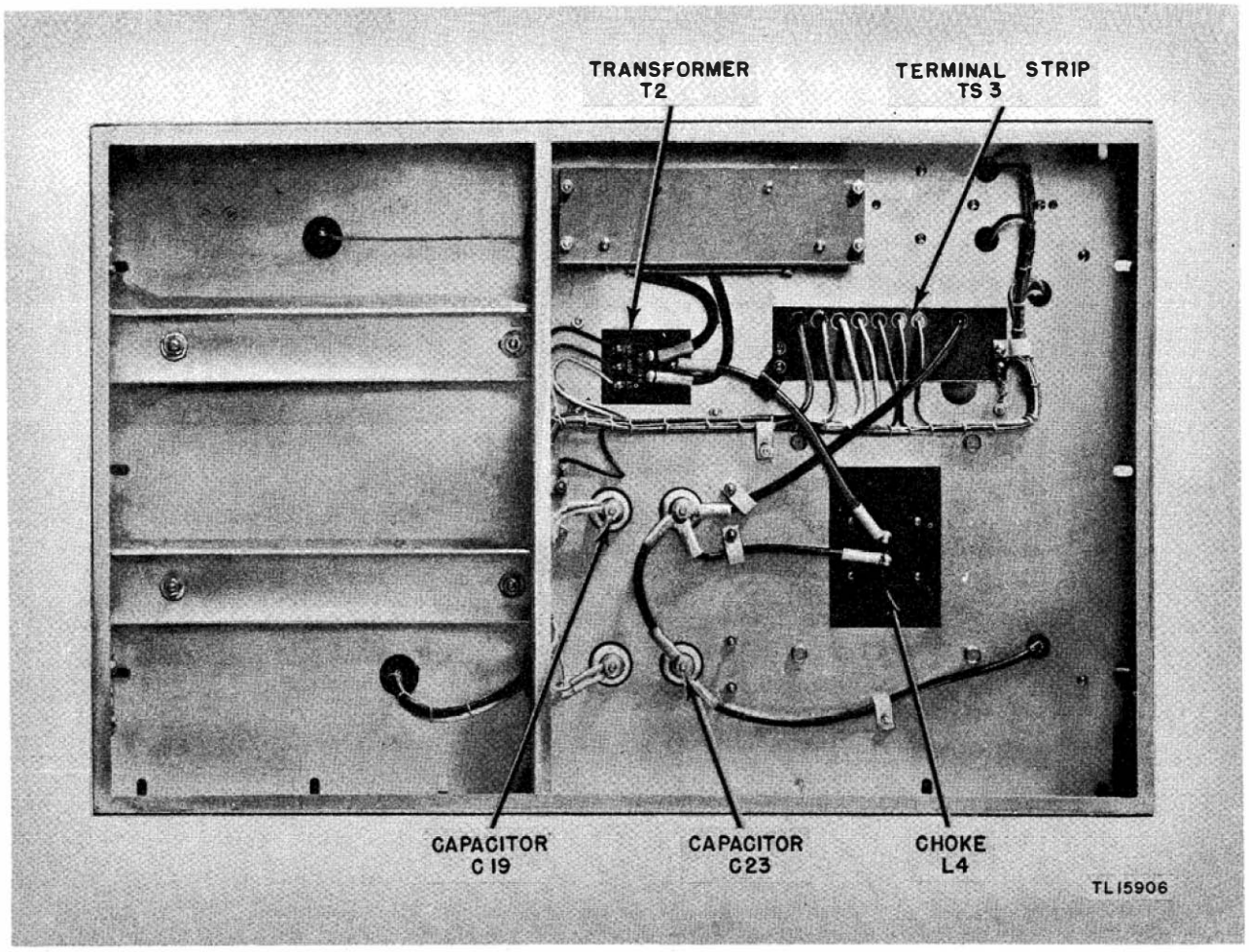

Figure 112. Radio Transmitter BC-610-E—bottom view of power-supply deck.

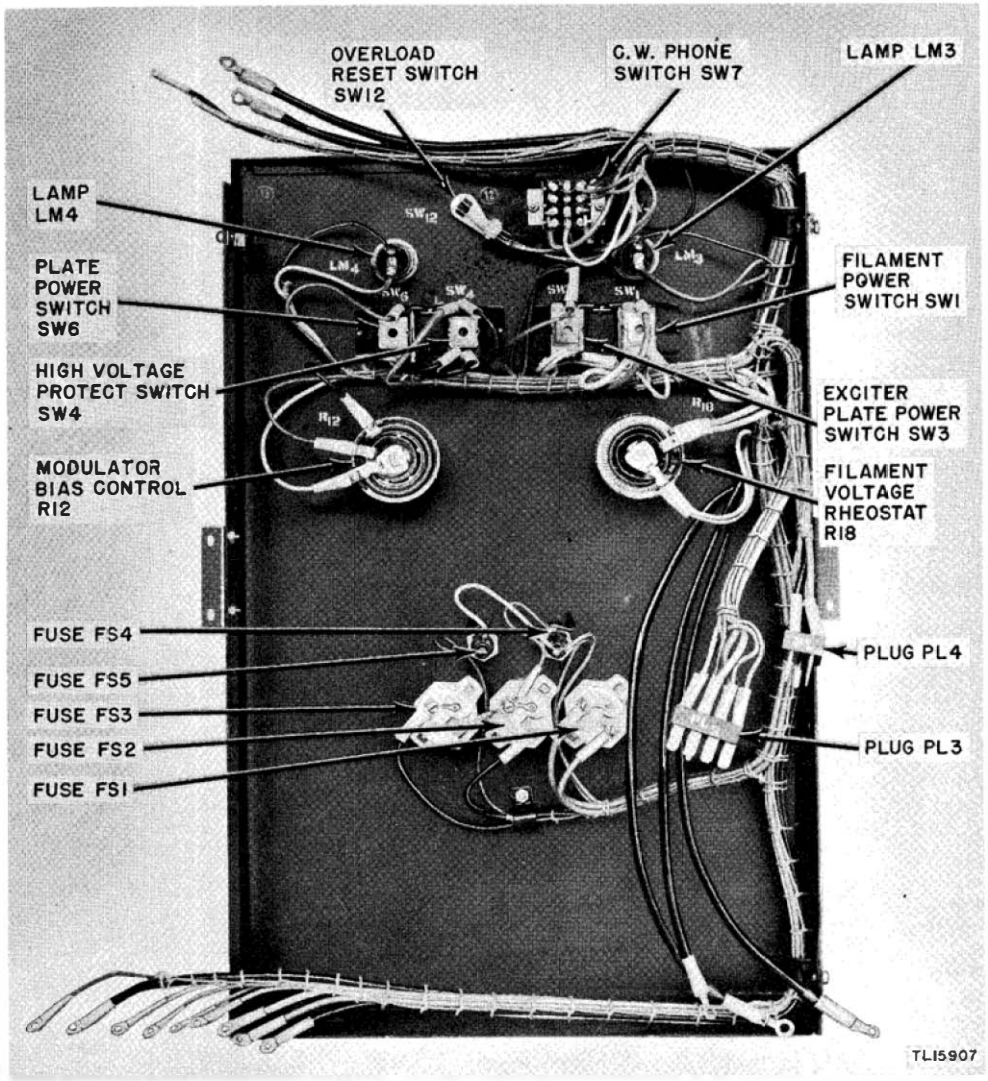

Figure 113. Radio Transmitter BC-610-E—rear view of power panel.

812293 O—49——12

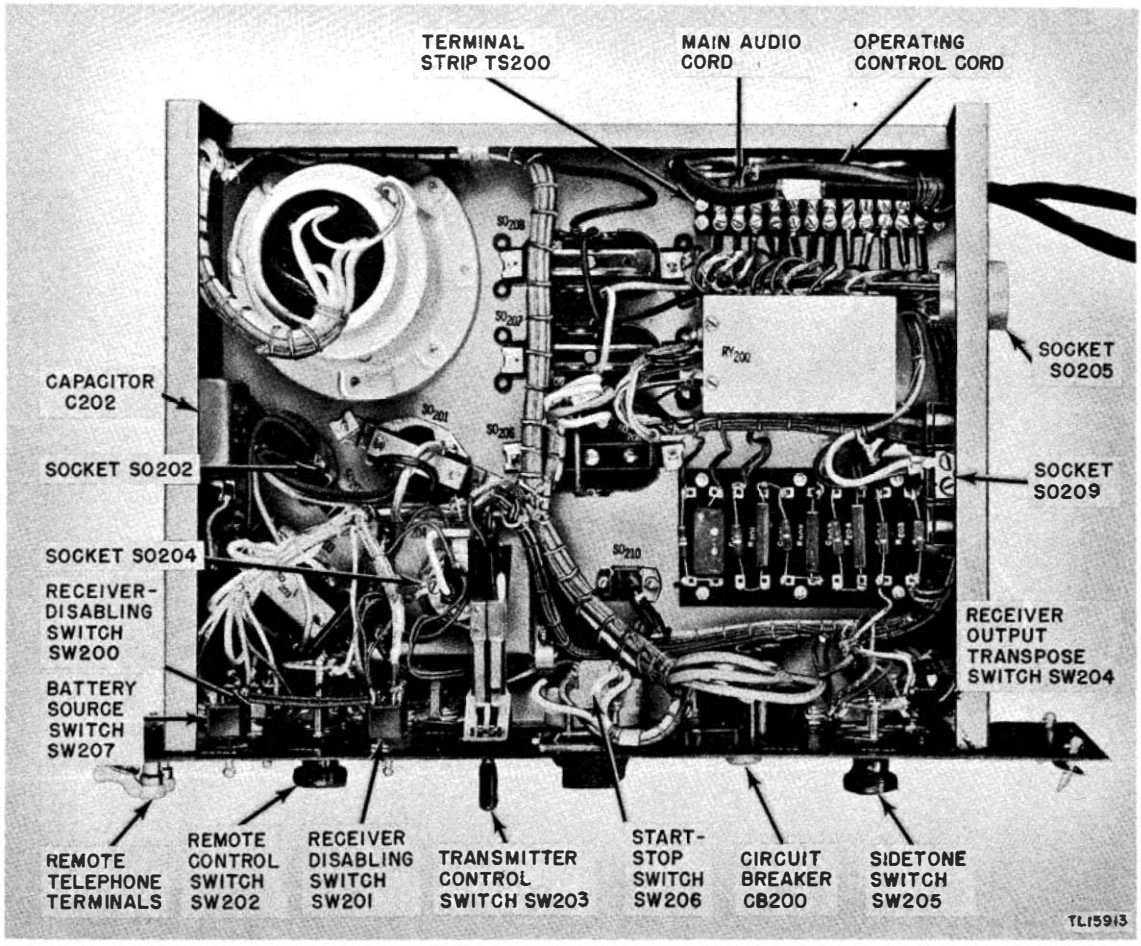

Figure 114. Junction Box JB-70-A—top interior view of chassis.

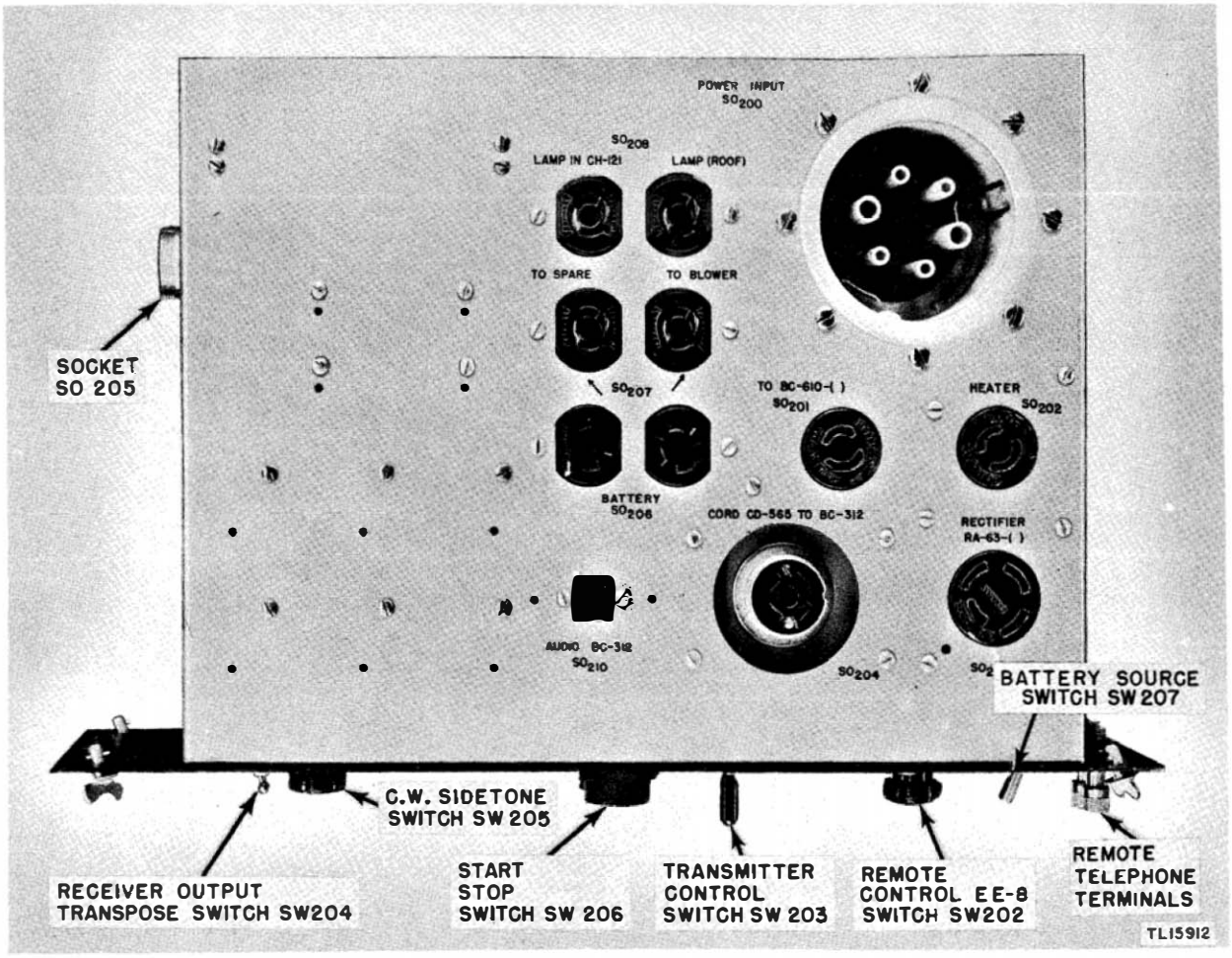

Figure 115. Junction Box JB-70-A—bottom view of chassis.

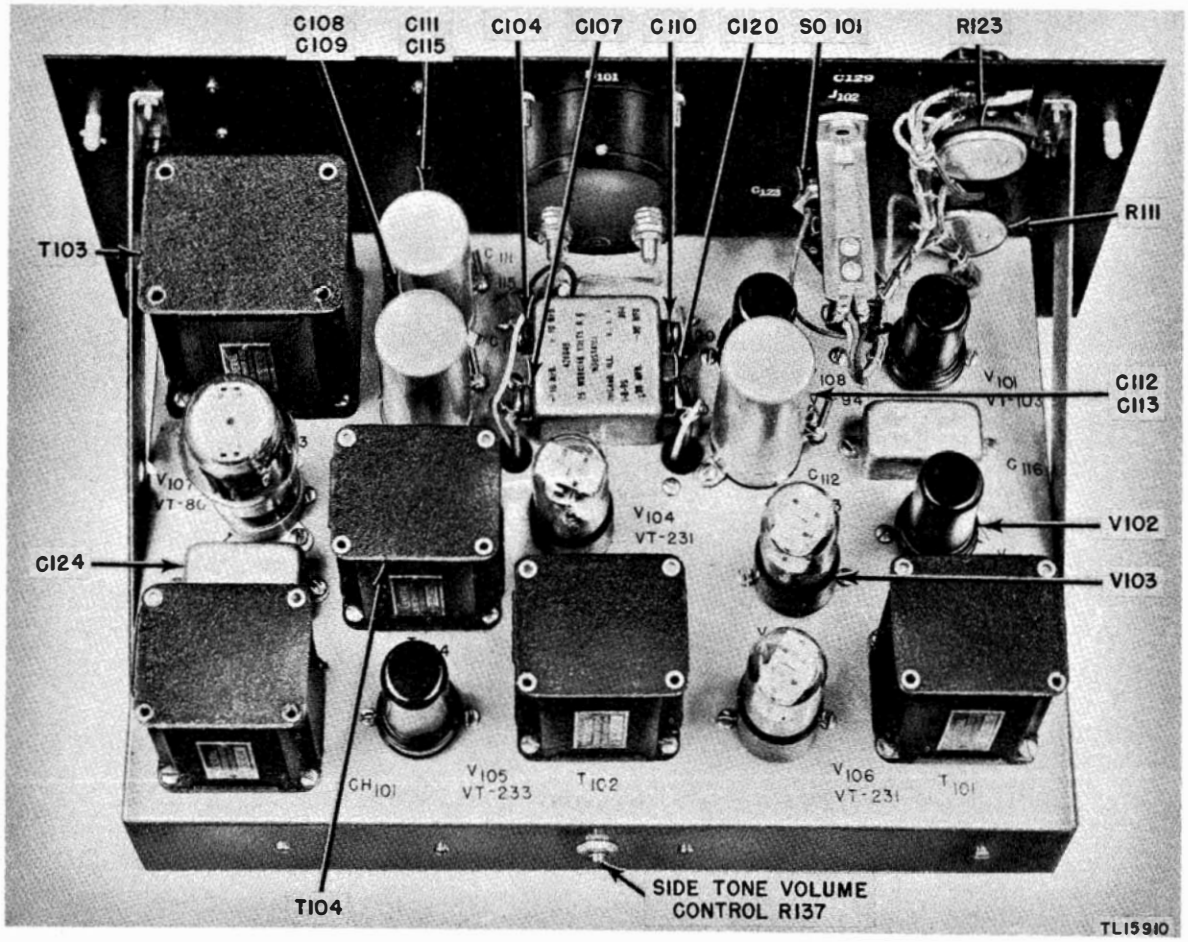

Figure 116. Speech Amplifier BC-614-E—top interior view of chassis.

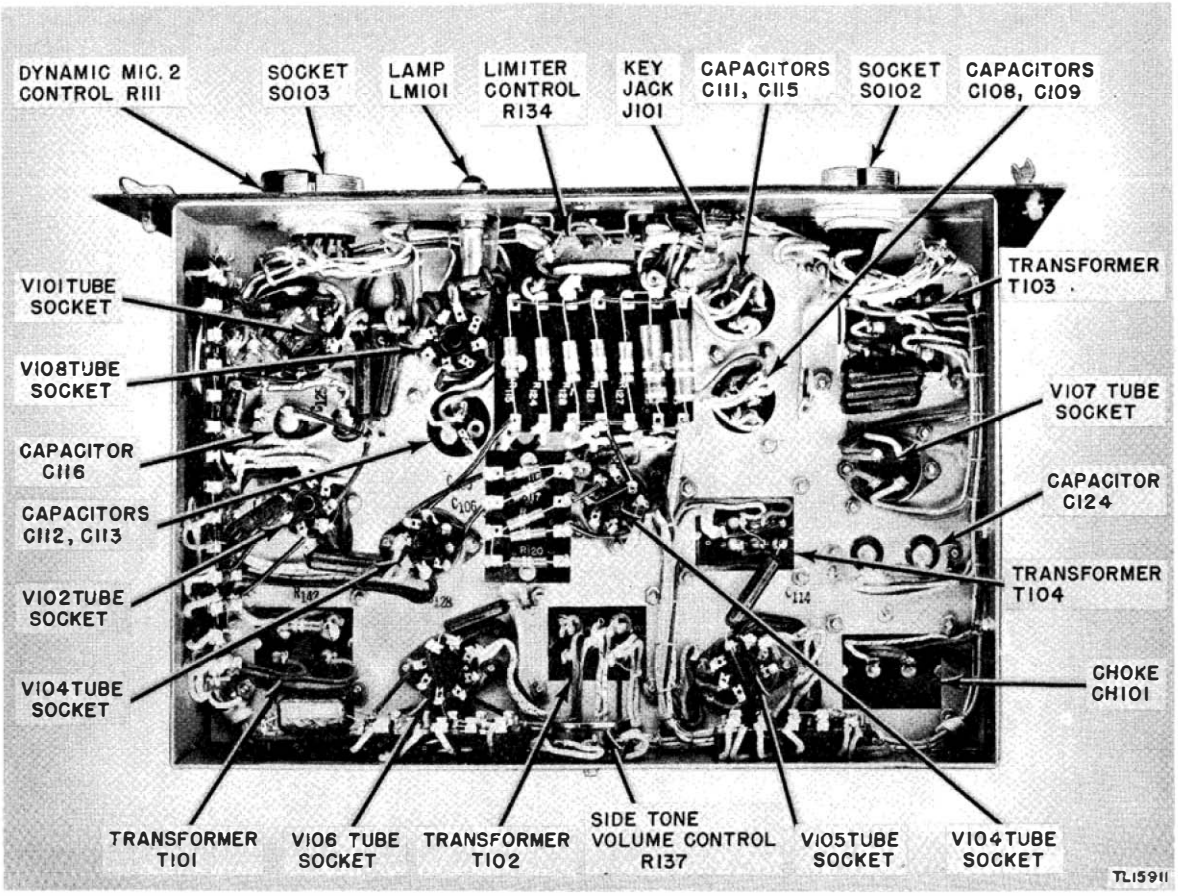

Figure 117. Speech Amplifier BC-614-E—bottom interior view of chassis.

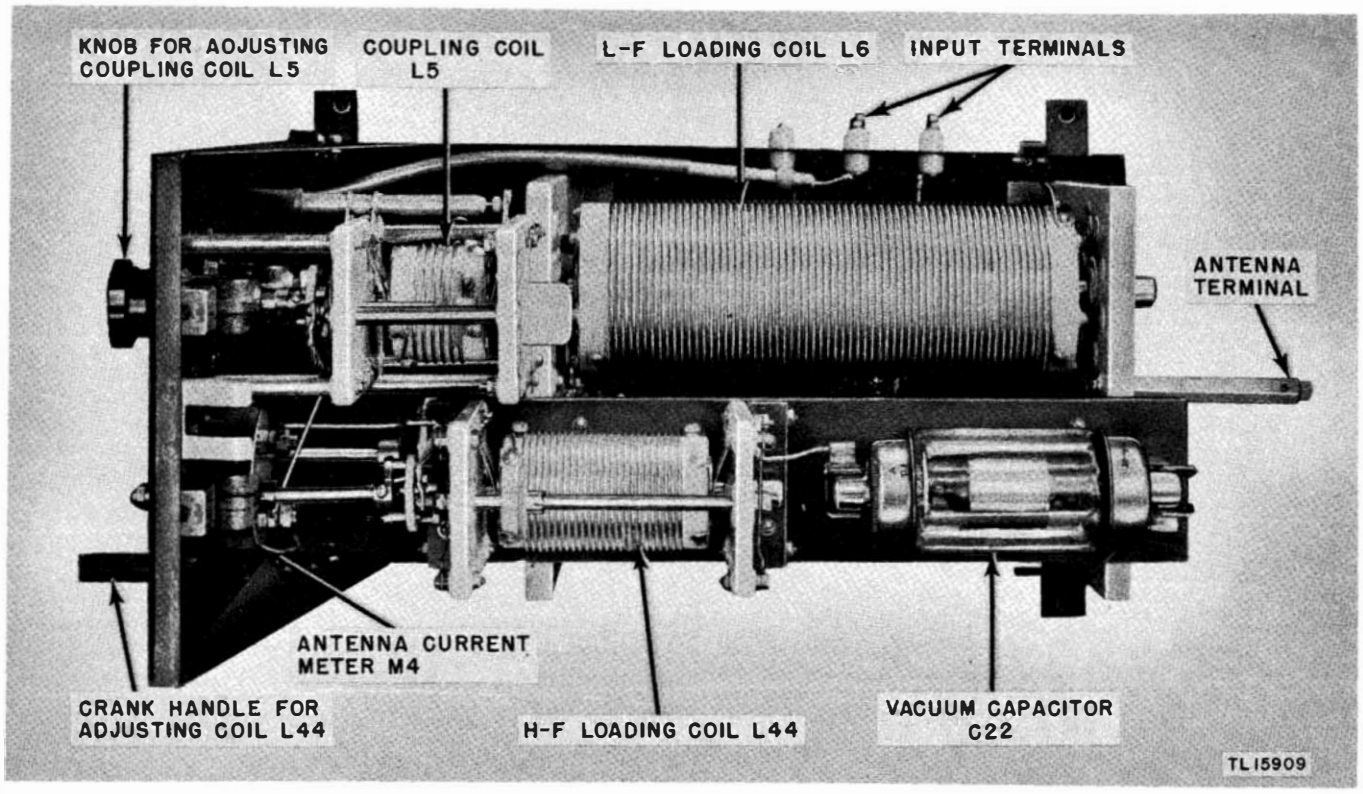

Figure 118. Antenna Tuning Unit BC-939-A—top interior view of chassis.

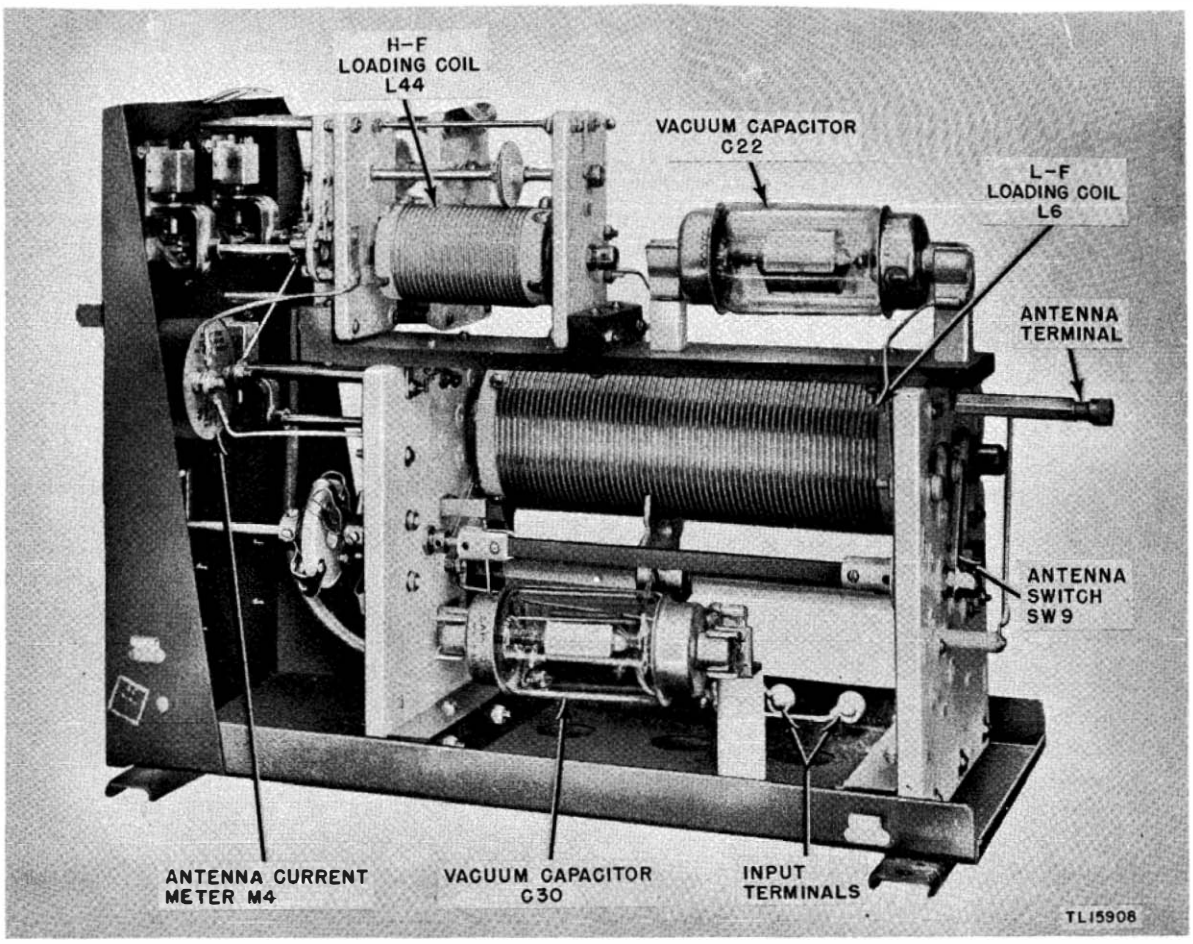

Figure 119. Antenna Tuning Unit BC-939-A—side interior view of chassis.

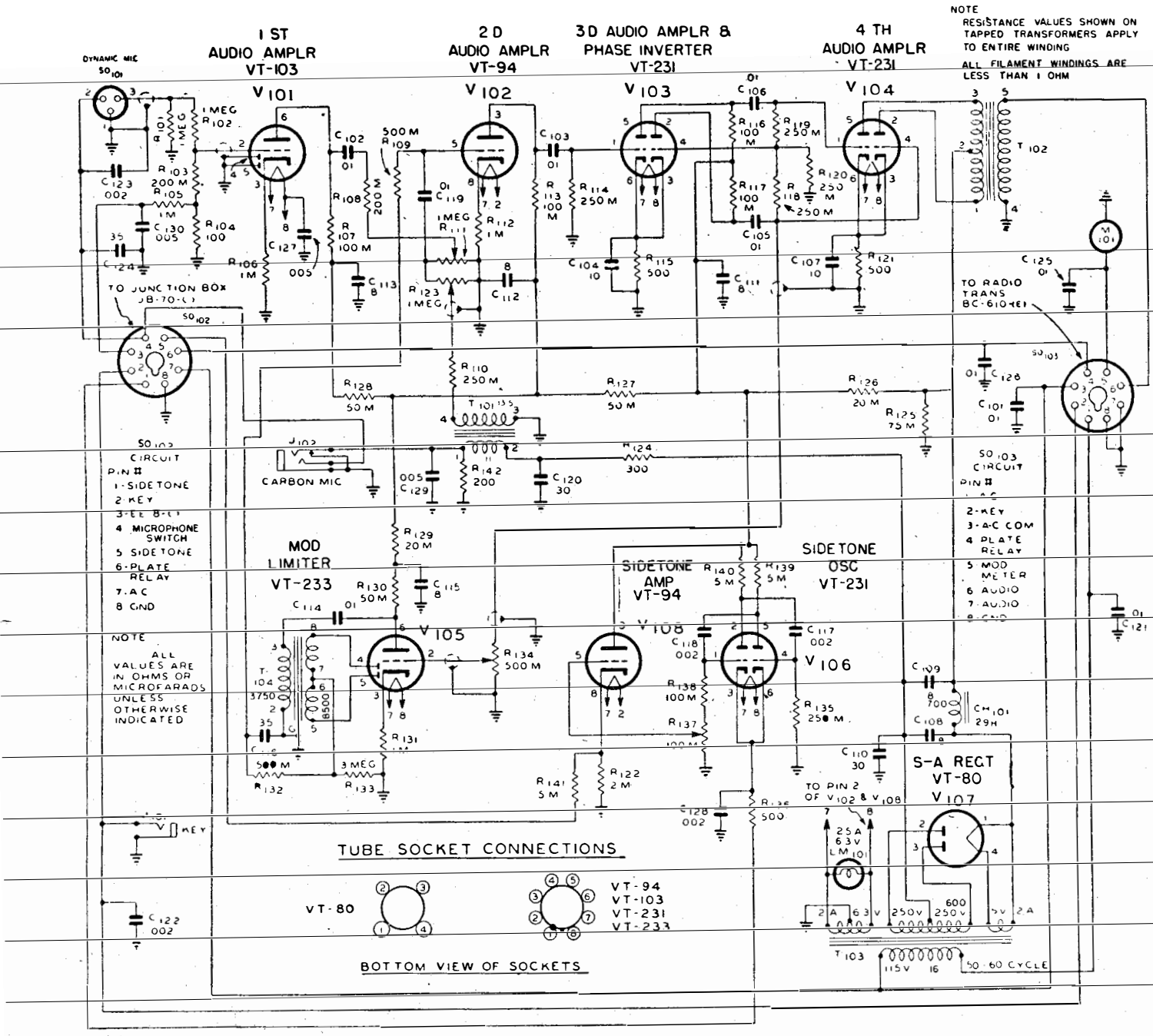

CAPACITORS			
REF SYMBOL	WORKING VOLTS	REF SYMBOL	WORKING VOLTS
C_{101}	600 V DC	C_{116}	400 V DC
C_{102}	600 V DC	C_{117}	600 V DC
C_{103}	600 V DC	C_{118}	600 V DC
C_{104}	25 V DC	C_{119}	600 V DC
C_{105}	600 V DC	C_{120}	25 V DC
C_{106}	600 V DC	C_{121}	600 V DC
C_{107}	25 V DC	C_{122}	600 V DC
C_{108}	475 V DC	C_{123}	600 V DC
C_{109}	475 V DC	C_{124}	400 V DC
C_{110}	25 V DC	C_{125}	600 V DC
C_{111}	475 V DC	C_{126}	600 V DC
C_{112}	475 V DC	C_{127}	500 V DC
C_{113}	475 V DC	C_{128}	600 V DC
C_{114}	600 V DC	C_{129}	500 V DC
C_{115}	475 V DC	C_{130}	500 V DC

RESISTORS			
REF SYMBOL	WATTS	REF SYMBOL	WATTS
R_{101}	1/2	R_{121}	1
R_{102}	1/2	R_{122}	1/2
R_{103}	1/2	R_{124}	1
R_{104}	1/2	R_{125}	2
R_{105}	1/2	R_{126}	2
R_{106}	1/2	R_{127}	1
R_{107}	1/2	R_{128}	1
R_{108}	1/2	R_{129}	1/2
R_{109}	1/2	R_{130}	1/2
R_{110}	1/2	R_{131}	1/2
R_{112}	1/2	R_{132}	1/2
R_{113}	1/2	R_{133}	1/2
R_{114}	1/2	R_{135}	1/2
R_{115}	1	R_{136}	1/2
R_{116}	1/2	R_{138}	1/2
R_{117}	1/2	R_{139}	1/2
R_{118}	1/2	R_{140}	1/2
R_{119}	1/2	R_{141}	1/2
R_{120}	1/2	R_{142}	1/2

Figure 123. Speech Amplifier BC-614-E—schematic diagram.

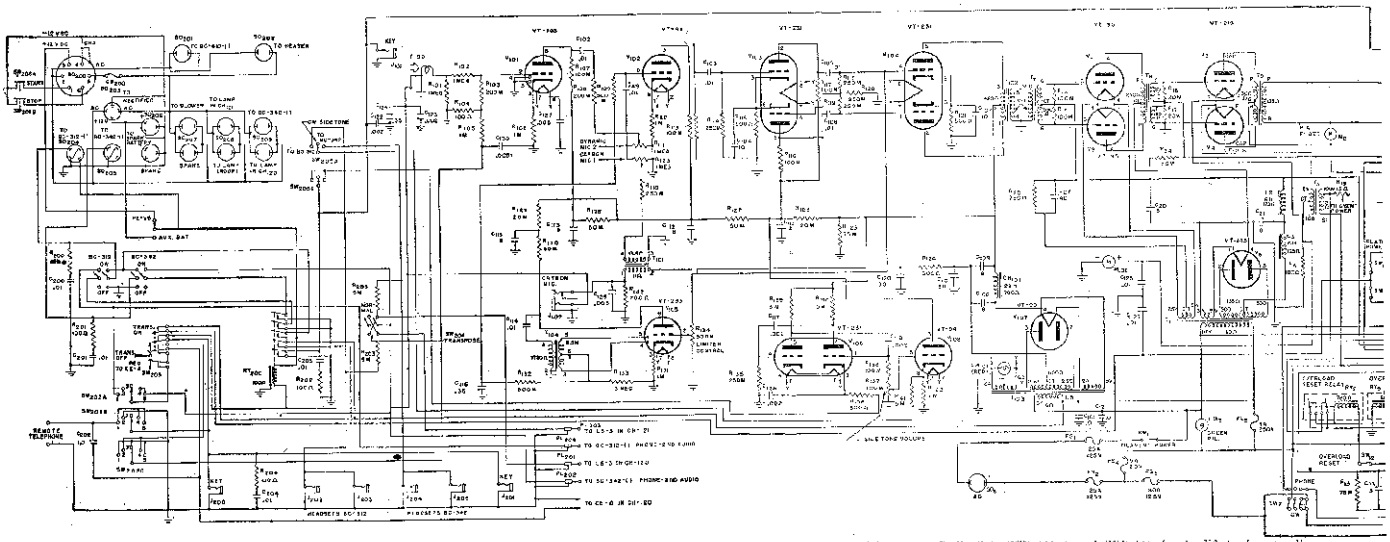

Figure 126. Radio Sets SCR-268-A and SCR-188-A—simplified schematic diagram.

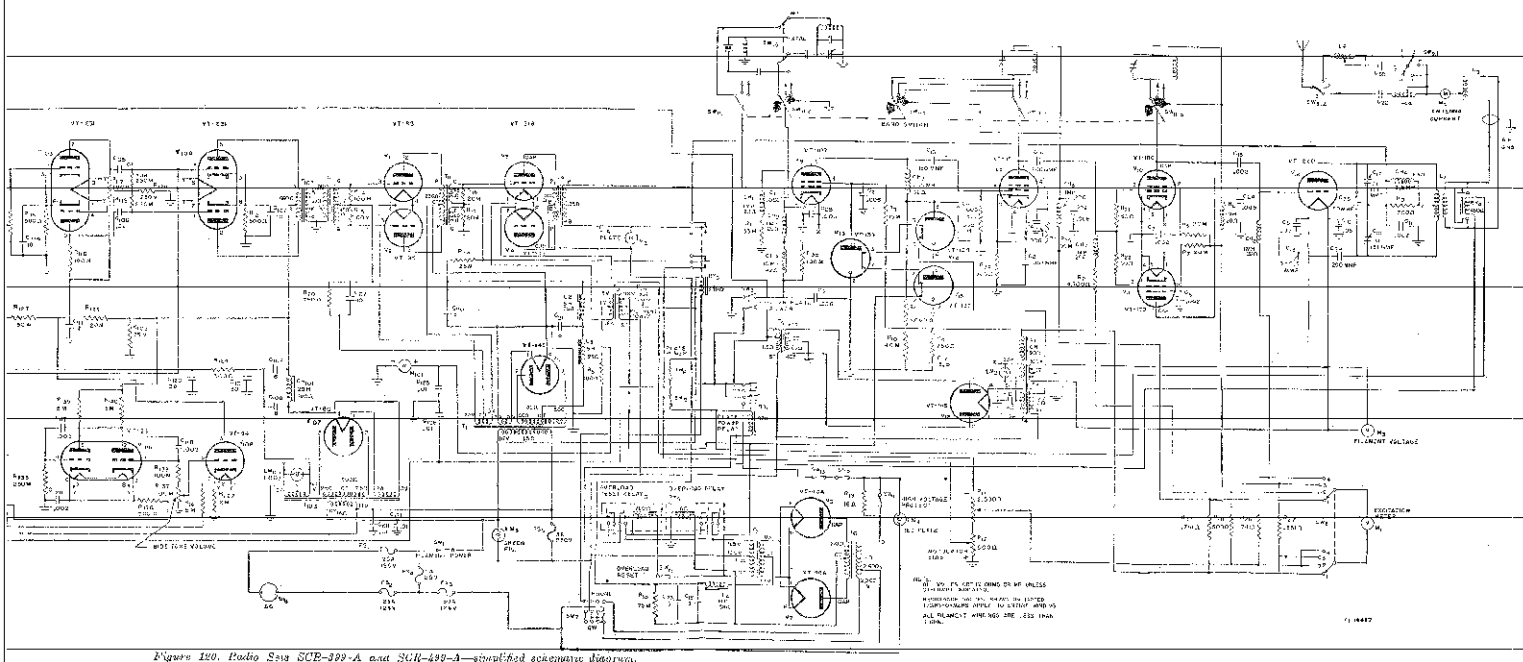

Figure 120. Radio Sets SCR-399-A and SCR-499-A—simplified schematic diagram.

CAPACITORS			
REF. SYMBOL	WORKING VOLTS	REF. SYMBOL	WORKING VOLTS
C_1	600 V DC	C_{15}	2,500 V DC
C_2	600 V DC	C_{16}	1,000 V DC
C_3	600 V DC	C_{17}	1,000 V DC
C_4	600 V DC	C_{18}	4,000 V DC
C_5	600 V DC	C_{19}	600 V DC
C_6	600 V DC	C_{20}	600 V DC
C_7	600 V DC	C_{21}	400 V DC
C_8	600 V DC	C_{22}	400 V DC
C_9	600 V DC	C_{23}	1,000 V DC
C_{10}	600 V DC	C_{24}	600 V DC
C_{11}	6000 V DC	C_{25}	600 V DC
C_{12}	600 V DC	C_{26}	600 V DC
		C_{27}	100 V DC
		C_{28}	20,000 V RMS TEST
C_{14}	2500 V DC	C_{29}	5,000 V DC

RESISTORS			
REF. SYMBOL	WATTS	REF. SYMBOL	WATTS
R_1	1/2	R_{15}	1/2
R_2	20	R_{16}	2
R_3	20	R_{17}	2
R_4	1	R_{18}	75
R_5	20	R_{19}	600
R_6	2	R_{20}	10
R_7	2	R_{21}	1/2
R_8	2	R_{22}	1/2
R_9	20	R_{23}	1
R_{10}	20	R_{24}	10
R_{11}	100	R_{25}	2
R_{12}	50	R_{26}	1/2
R_{13}	200	R_{34}	10
R_{14}	1/2	R_{35}	1/2

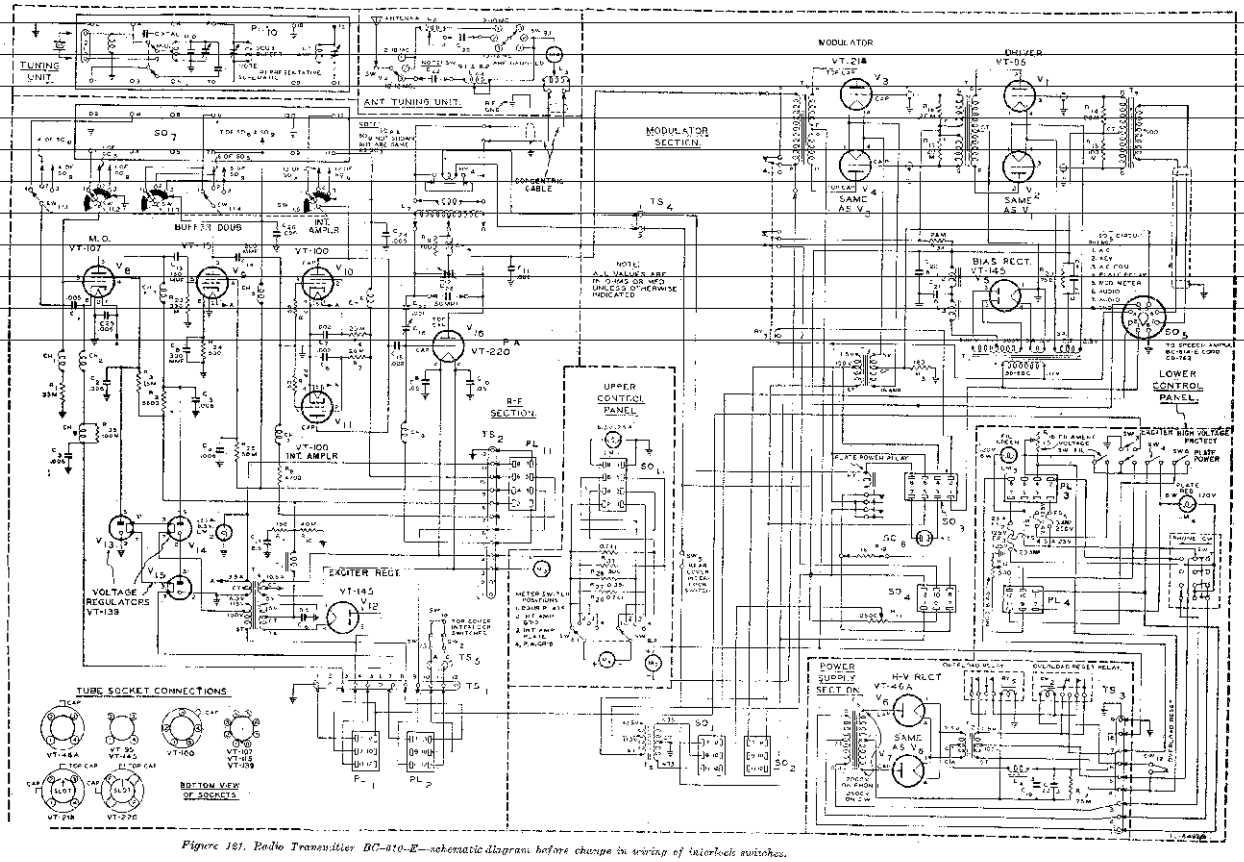

Figure 181. Radio Transmitter BC-610-E—schematic diagram before change in wiring of interlock switches.

CAPACITORS			
REF. SYMBOL	WORKING VOLTS	REF. SYMBOL	WORKING VOLTS
C_1	600 V DC	C_{15}	2,500 V DC
C_2	600 V DC	C_{16}	1,000 V DC
C_3	600 V DC	C_{17}	1,000 V DC
C_4	600 V DC	C_{18}	4,000 V DC
C_5	600 V DC	C_{20}	600 V DC
C_6	600 V DC	C_{21}	600 V DC
C_7	600 V DC	C_{23}	600 V DC
C_8	500 V DC	C_{24}	1,000 V DC
C_9	600 V DC	C_{25}	600 V DC
C_{10}	600 V DC	C_{26}	600 V DC
C_{11}	5000 V DC	C_{27}	100 V DC
C_{13}	500 V DC	C_{28}	20,000 V DC TEST
C_{14}	2500 V DC	C_{29}	5,000 V DC

RESISTORS			
REF. SYMBOL	WATTS	REF. SYMBOL	WATTS
R_1	1/2	R_{15}	1/2
R_2	20	R_{16}	2
R_3	20	R_{17}	2
R_4	-	R_{18}	75
R_5	20	R_{19}	600
R_6	2	R_{20}	10
R_7	2	R_{21}	1/2
R_8	2	R_{22}	1/2
R_9	20	R_{23}	1
R_{10}	20	R_{24}	10
R_{11}	130	R_{25}	2
R_{12}	50	R_{28}	1/2
R_{13}	200	R_{34}	10
R_{14}	1/2	R_{35}	1/2

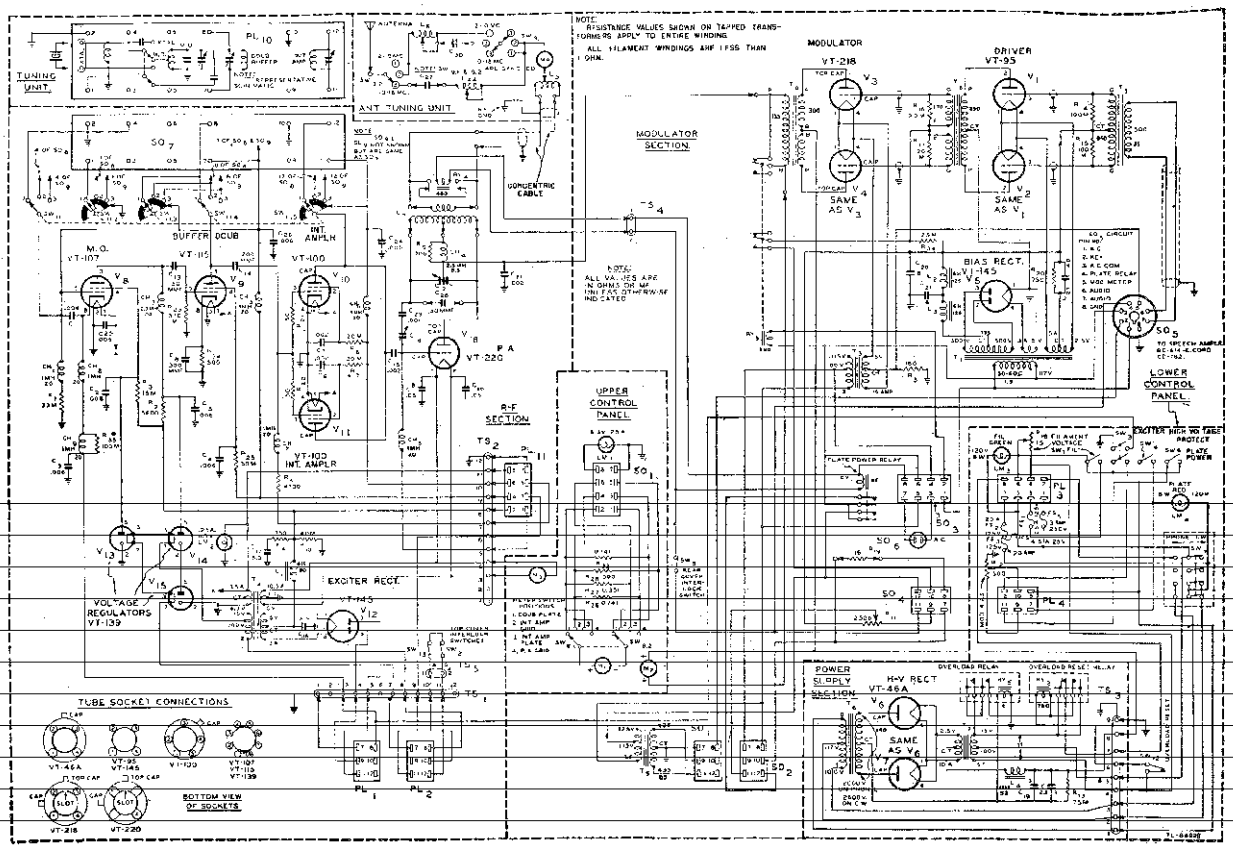

Figure 122. Radio Transmitter BC-610-E—schematic diagram after change in wiring of interlock switches.

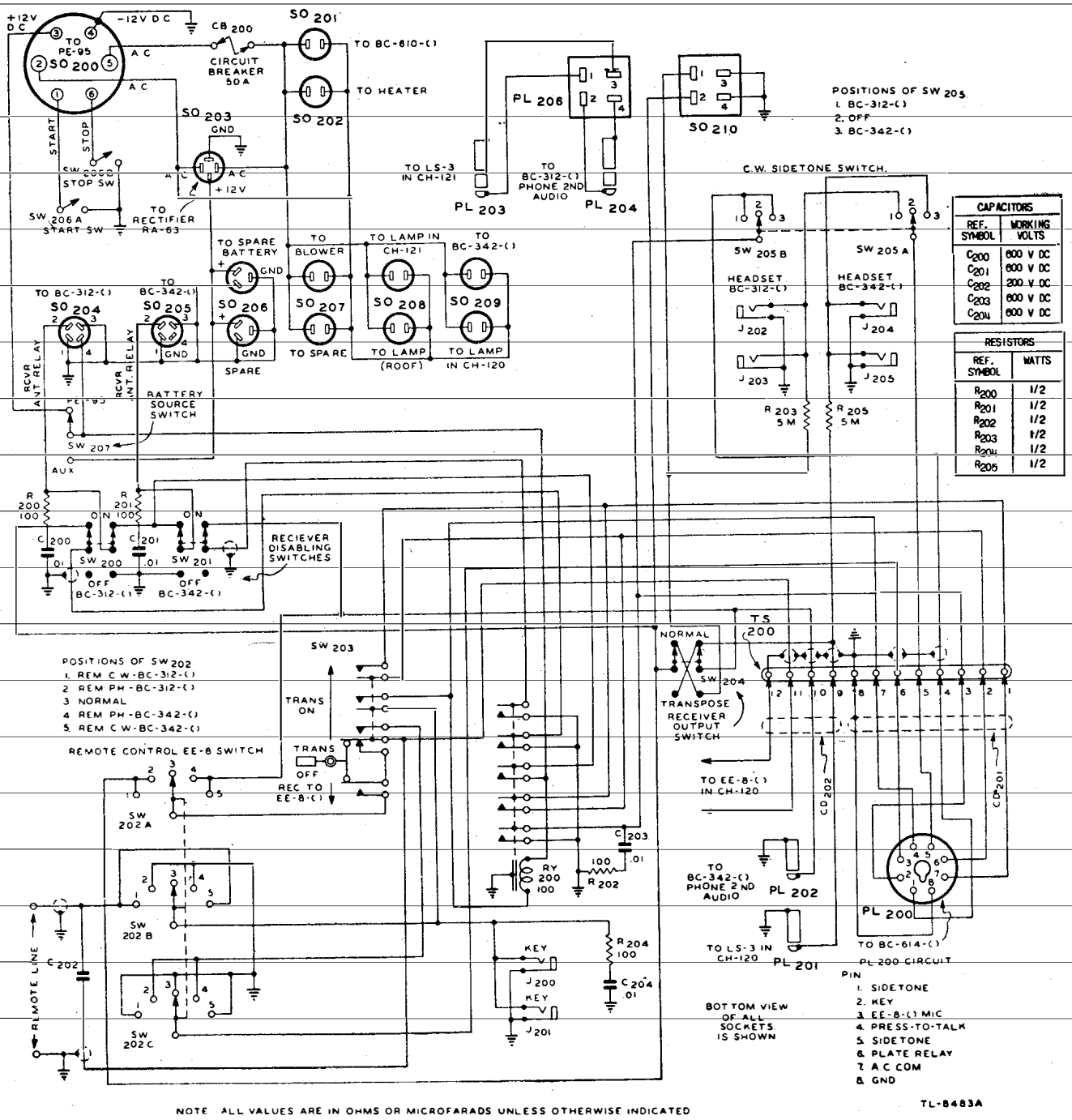

CAPACITORS	
REF. SYMBOL	WORKING VOLTS
C_{200}	600 V DC
C_{201}	600 V DC
C_{202}	200 V DC
C_{203}	600 V DC
C_{204}	600 V DC

RESISTORS	
REF. SYMBOL	WATTS
R_{200}	1/2
R_{201}	1/2
R_{202}	1/2
R_{203}	1/2
R_{204}	1/2
R_{205}	1/2

NOTE ALL VALUES ARE IN OHMS OR MICROFARADS UNLESS OTHERWISE INDICATED

Figure 124. Junction Box JB-70-A—schematic diagram.

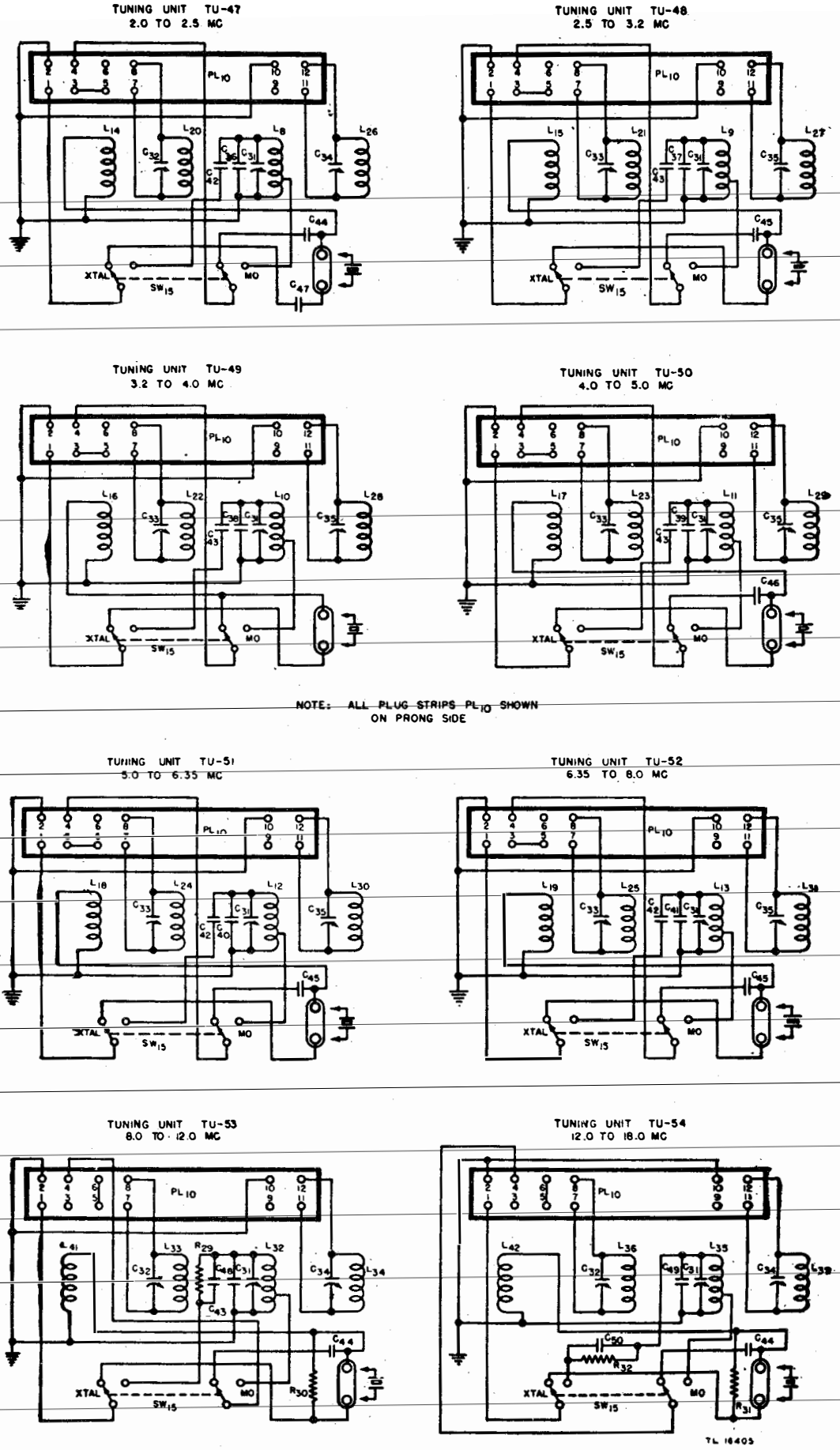

Figure 125. Tuning Units TU-47 through TU-54—schematic diagram.

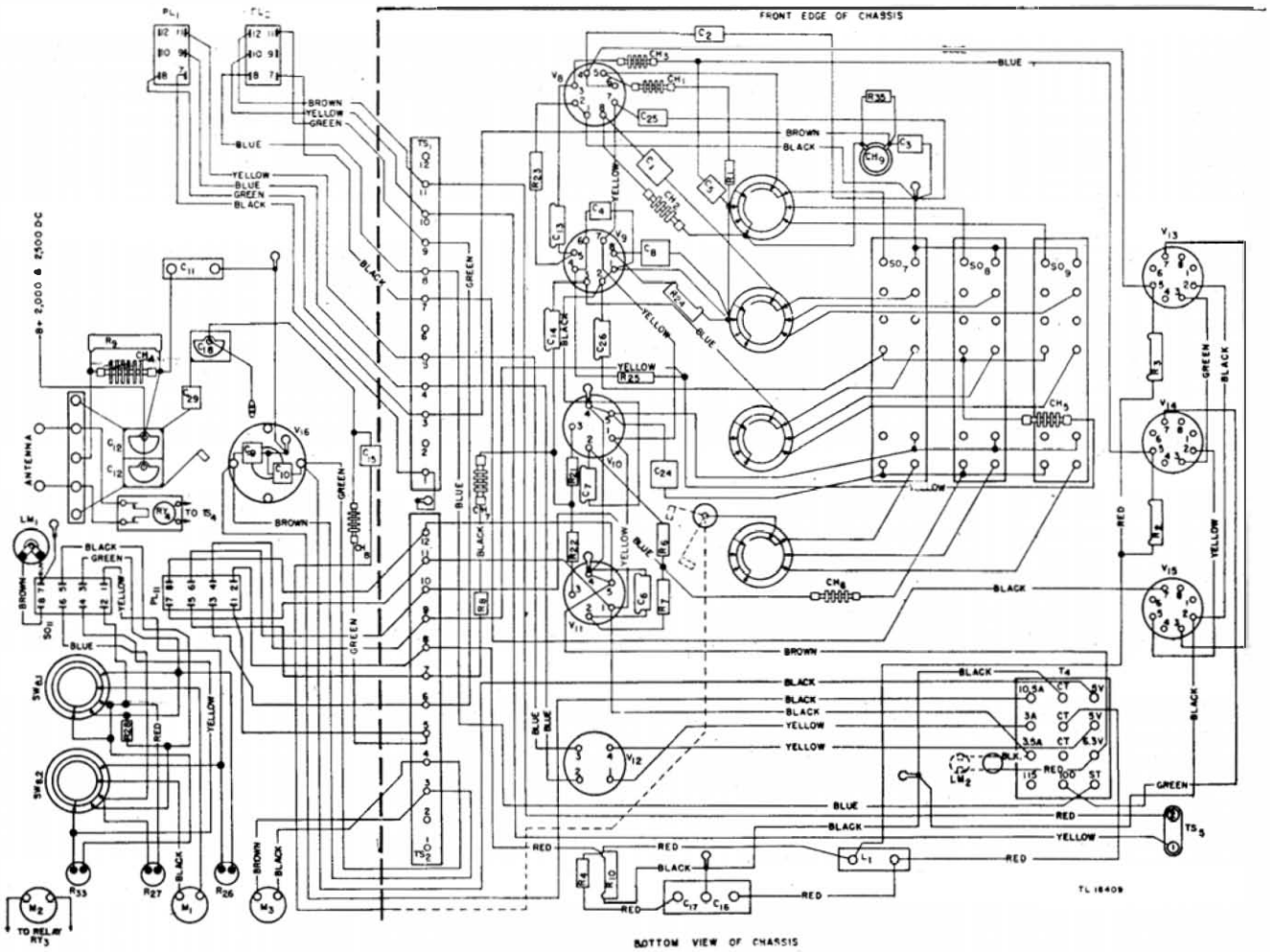

Figure 126. Radio Transmitter BC-610-E, exciter deck—practical wiring diagram.

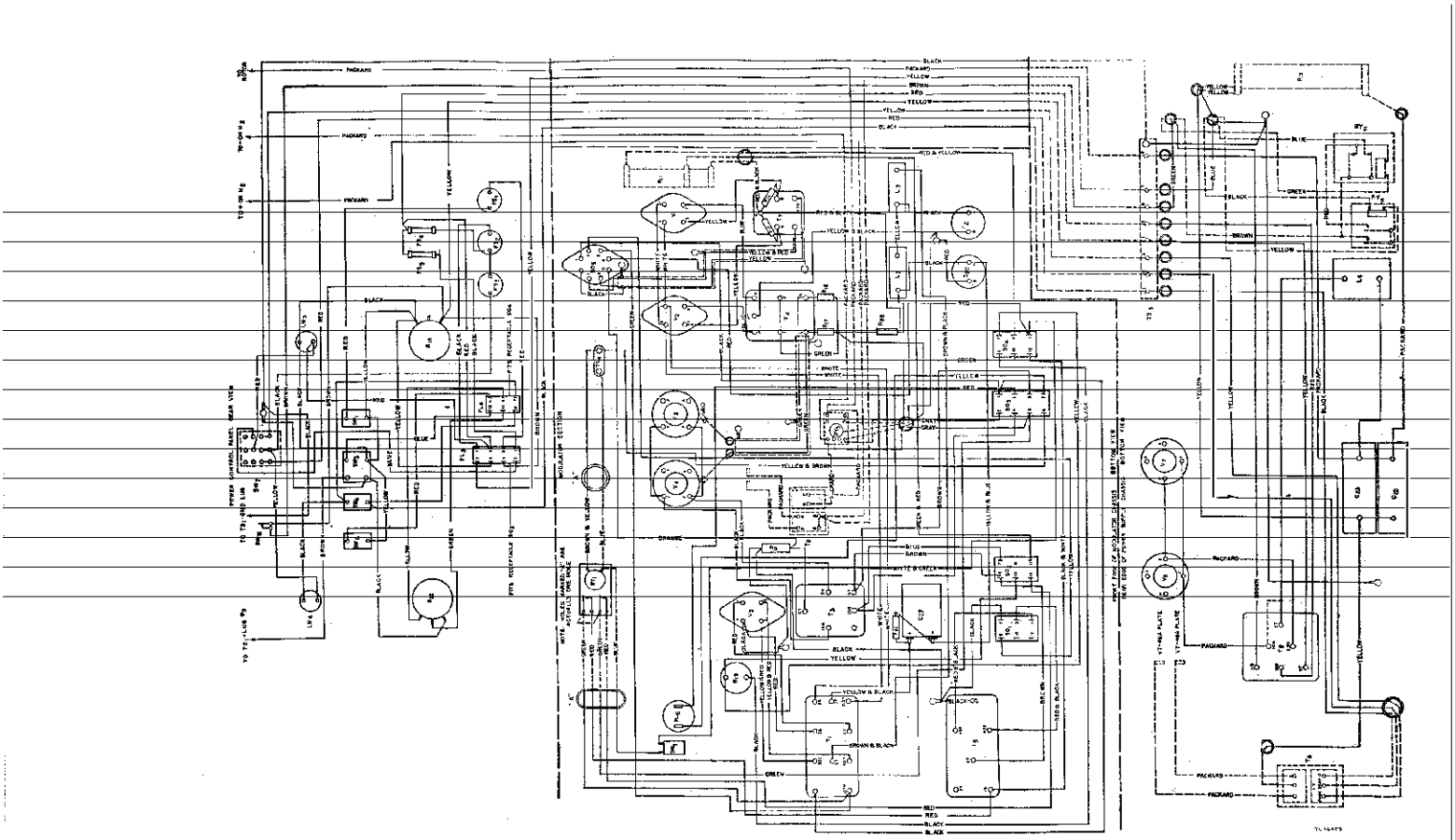

Figure 127. Radio Transmitter BC-610-E, modulator and power supply chassis—practical wiring diagram.

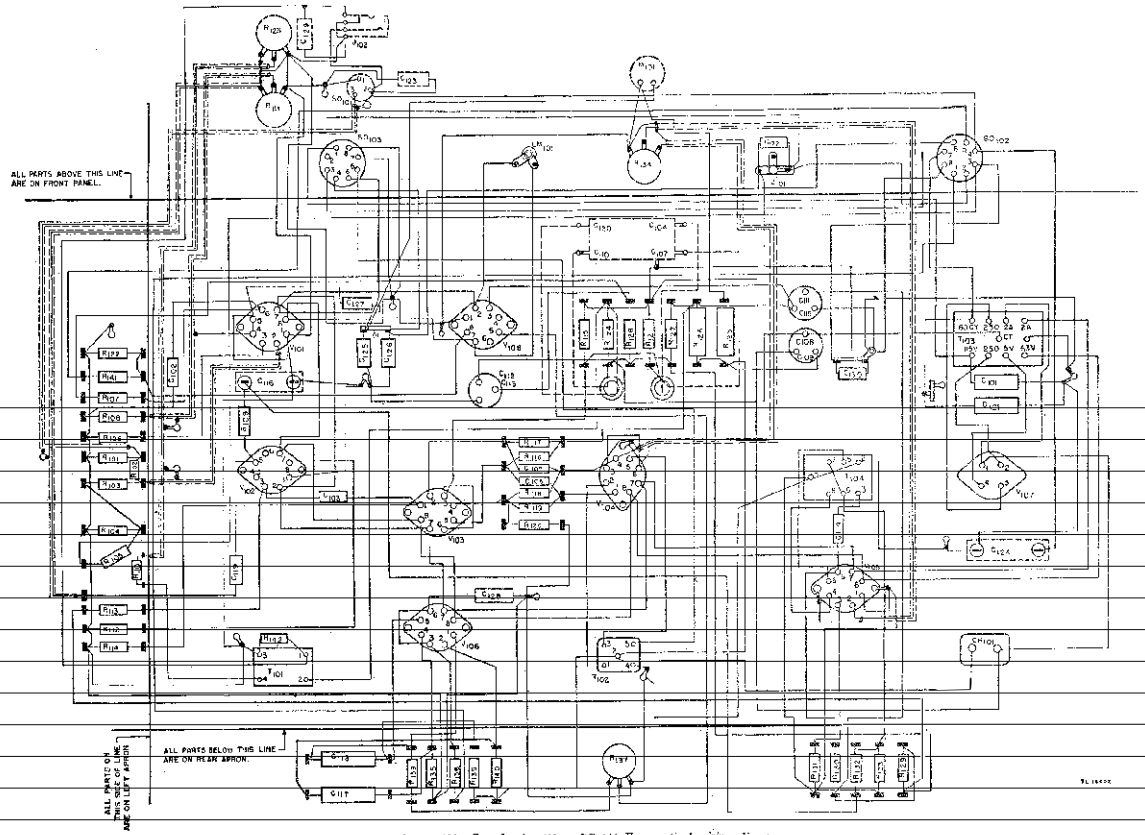

Figure 129. Speech Amplifier BC-614-E: practical wiring diagram.

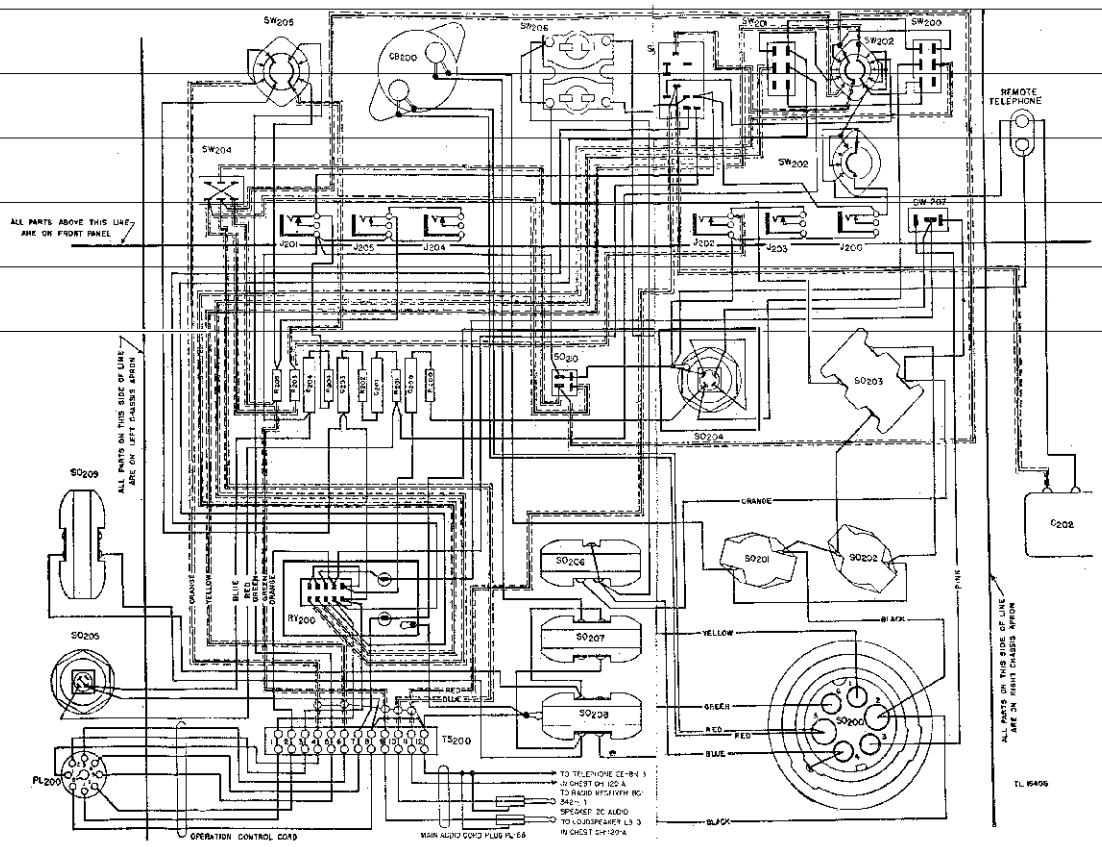

Figure 180. Junction Box JB-70-A—practical wiring diagram.

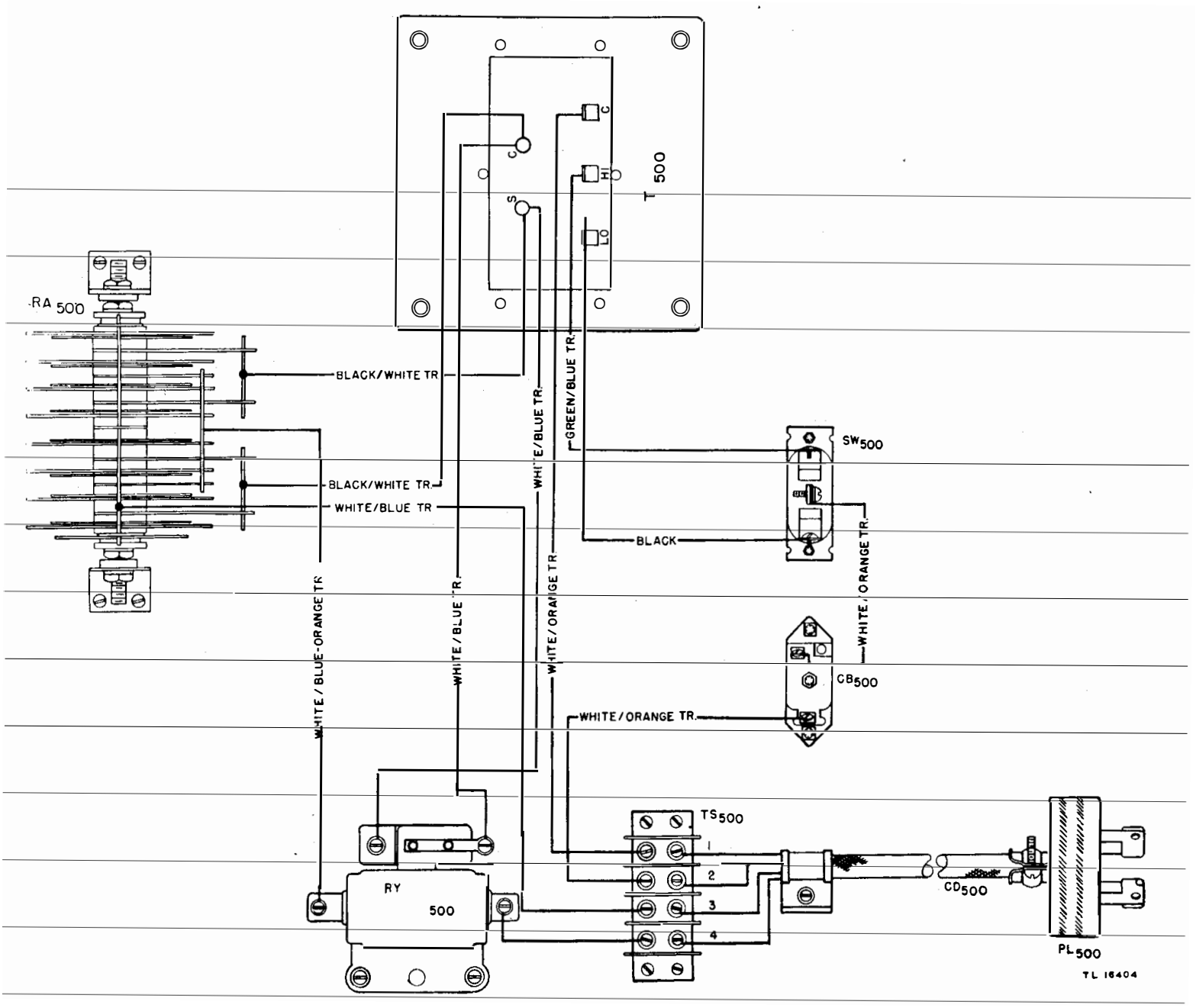

Figure 131. Rectifier RA-63-A—practical wiring diagram.

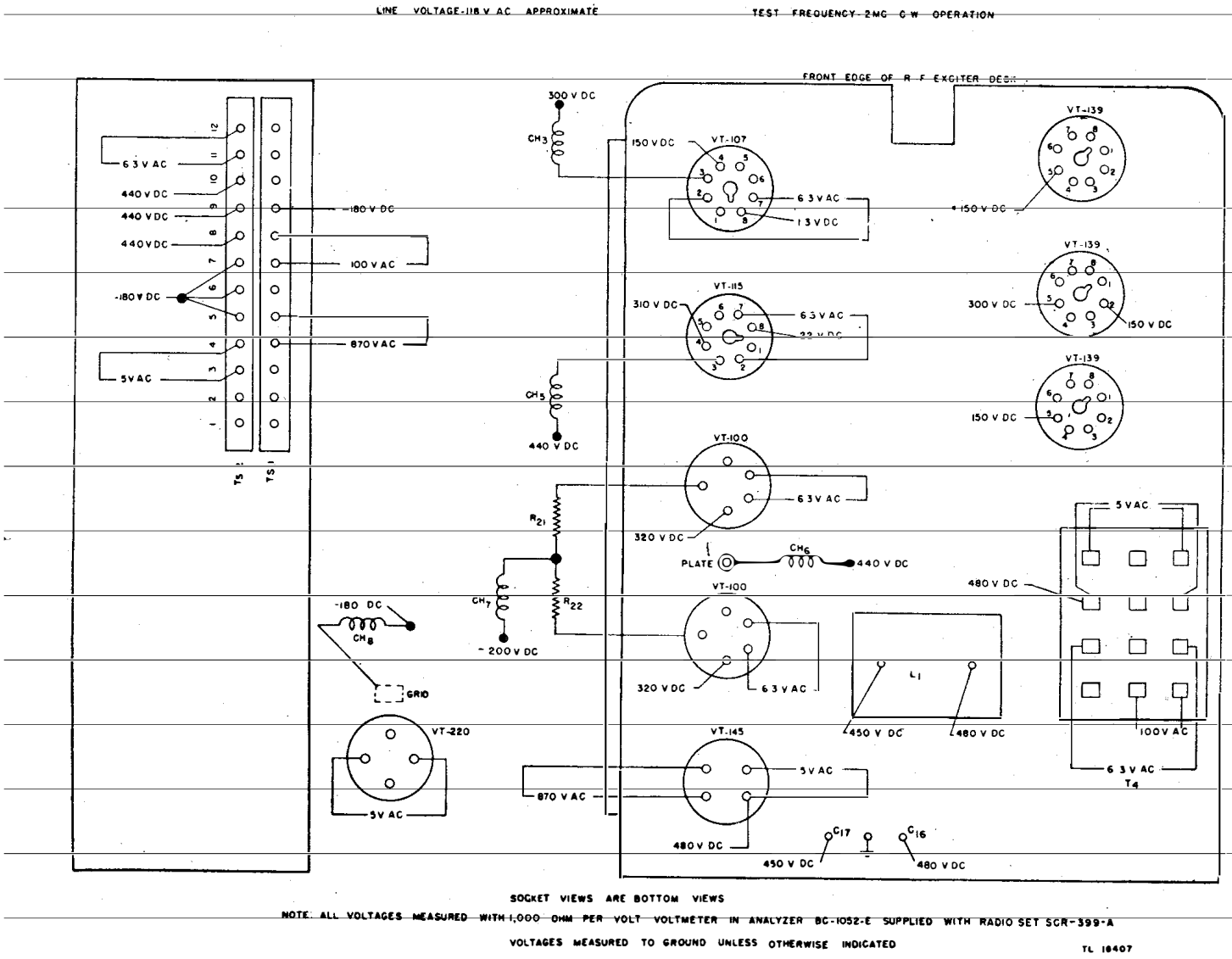

Figure 132. Radio Transmitter BC-610-E, exciter deck, voltages at tube sockets and terminal strips.

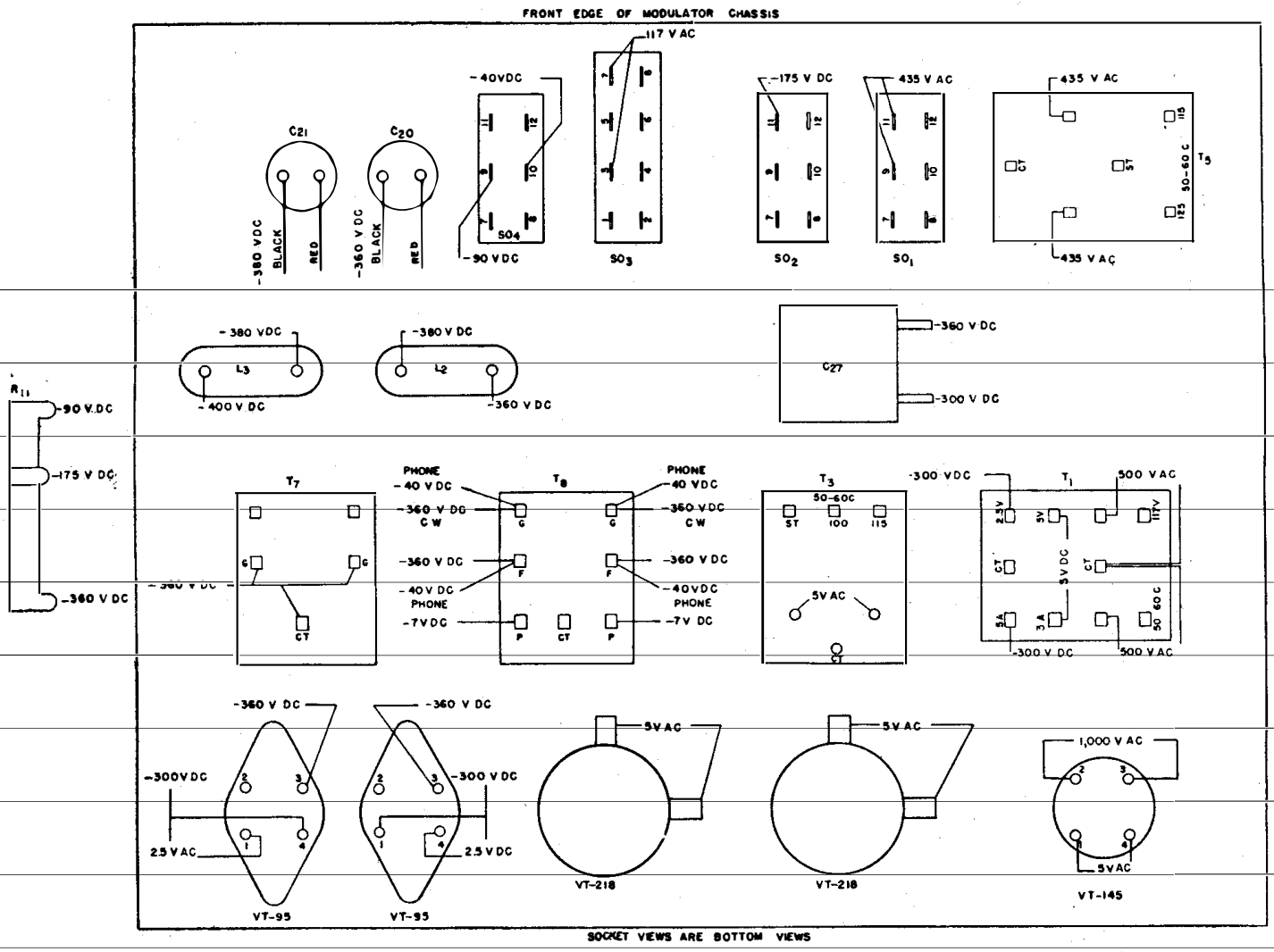

Figure 133. Radio Transmitter BC–610–E, modulator deck, voltages at tube sockets and transformers.

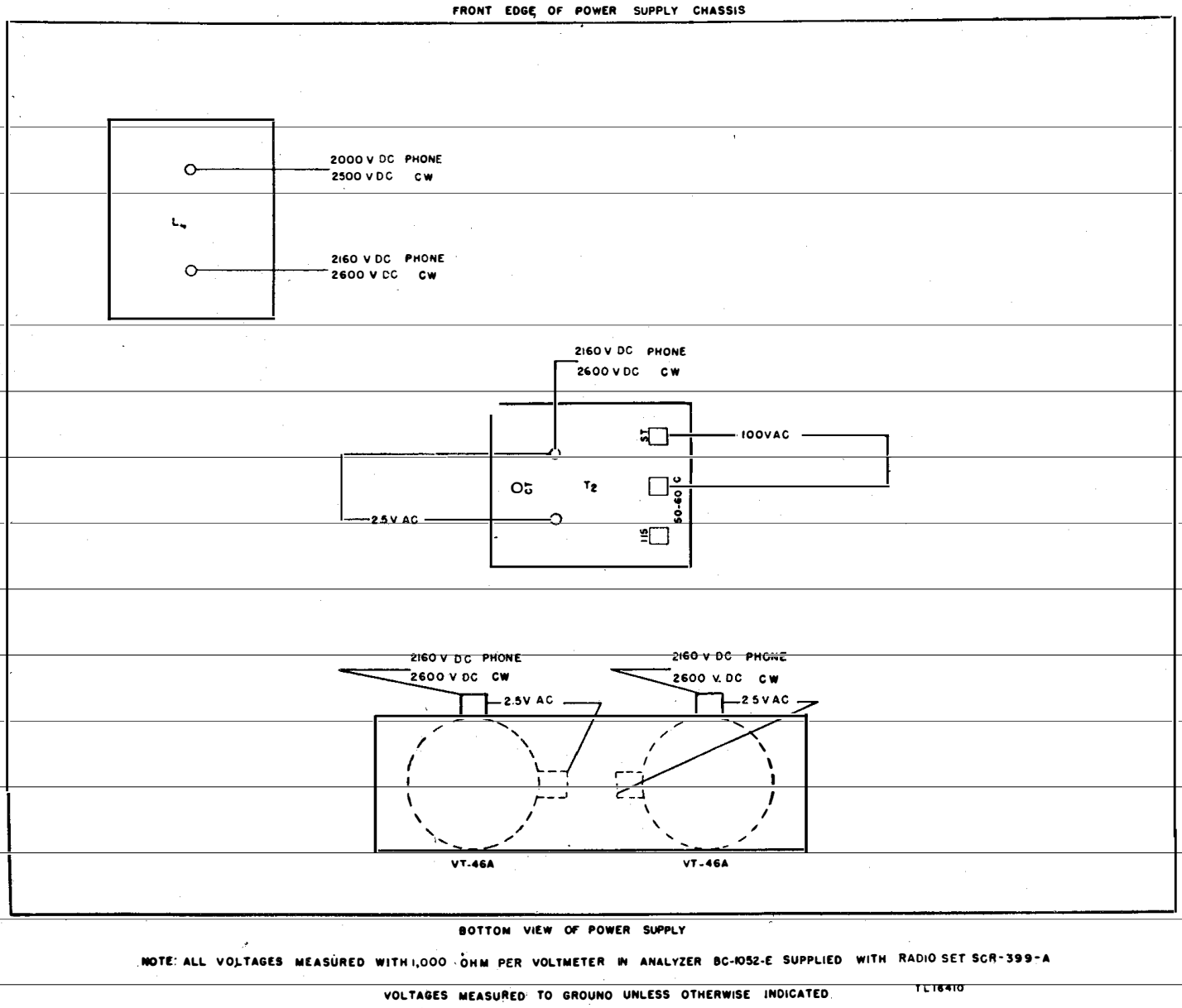

Figure 134. Radio Transmitter BC-610-E, power-supply deck, voltages at tube sockets and transformers.

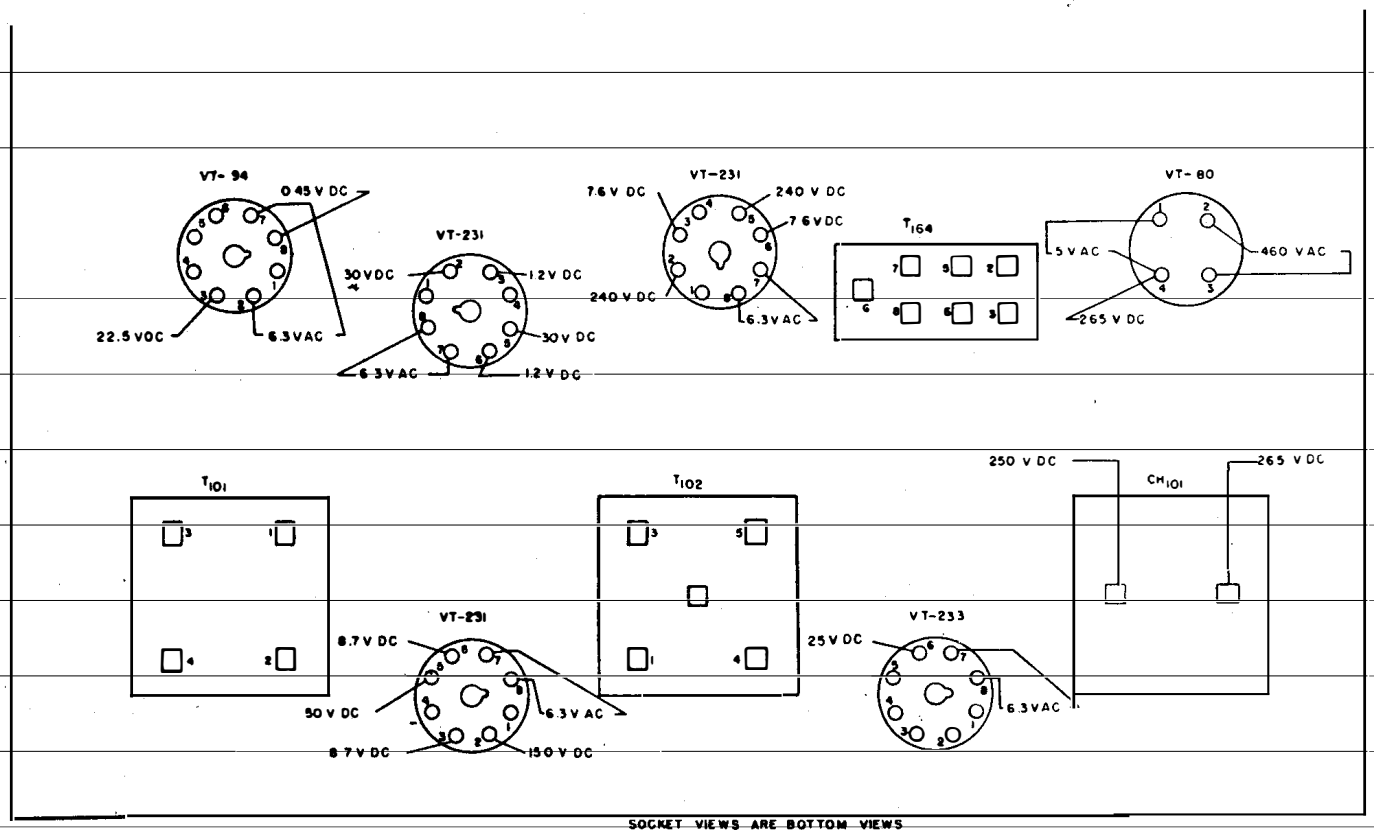

Figure 135. Speech Amplifier BC–614–E, voltages from tube sockets to chassis.

APPENDIX I

MAINTENANCE PARTS LIST

For maintenance parts information, see appropriate sections of Army Service Forces Catalogs SIG–7 SCR–399 and SIG–7 SCR–499, Organizational Spare Parts, and SIG–8 SCR–299, SCR–399, SCR–499, Higher Echelon Spare Parts.

APPENDIX II

REFERENCES

1. Parts List

SIG 1	Introduction to ASF Signal Supply Catalog (when published).
SIG 2	Complete Index to ASF Signal Supply Catalog (when published).
SIG 3	List of Items for Troop Issue.
SIG 4–1	Allowances of Expendable Supplies.
SIG 4–2	Allowances of Expendable Supplies for Schools, Training Centers, and Boards.
SIG 5	Stock List of all Items.
SIG 6	Sets (when published).
SIG 7	Organizational Spare Parts.
SIG 8	Higher Echelon Spare Parts for Radio Sets SCR–399–A and SCR–499–A.
SIG 8	Higher Echelon Spare Parts for Radio Receivers BC–312–( ) and BC–342–( ).
SIG 8	Higher Echelon Spare Parts for Radio Transmitter BC–610.
SIG 8	Higher Echelon Spare Parts for Speech Amplifier BC–614–( ).
SIG 8	Higher Echelon Spare Parts for Antenna Tuning Unit BC–939–A.
SIG 8	Higher Echelon Spare Parts for Telephones EE–8–( ).
SIG 8	Higher Echelon Spare Parts for Headset HS–30–( ).
SIG 8	Higher Echelon Spare Parts for Shelter HO–17.
SIG 8	Higher Echelon Spare Parts for Junction Box JB–70–A.
SIG 8	Higher Echelon Spare Parts for Power Unit PE–95–A, B, C, D.
SIG 8	Higher Echelon Spare Parts for Frequency Meter Set SCR–211–( ).
SIG 8	Higher Echelon Spare Parts for Microphone T–30–( ).
SB 11–8	Chests for Running Spares.
SB 11–10	Signal Corps Kit and Materials for Moisture and Fungi-Resistant Treatment.

2. Technical Manuals on Auxiliary Equipment and Test Equipment

TM 11–300	Frequency Meter Sets SCR–211–A, SCR–211–B, and SCR–211–C.
TM 11–303	Test Sets I–56–C, I–56–D, I–56–H, and I–56–J.
TM 11–307	Signal Generators I–72–G, I–72–H, and I–72–J.
TM 11–321	Test Set I–56–E.
TM 11–2613	Voltommeter I–166.
TM 11–2626	Test Unit I–176.
TM 11–2627	Tube Tester I–177.
TM 11–472	Repair and Calibration of Electrical Measuring Instruments.

3. Painting, Preserving, and Lubrication

SB 11–10	Signal Corps Kit and Materials for Moisture and Fungi-Resistant Treatment.

4. Shipping Instructions

U. S. Army Spec No. 100–14A	Army-Navy General Specification for Packaging and Packing for Oversea Shipment.

5. Decontamination

TM 3–220	Decontamination.

6. Demolition

FM 5–25	Explosives and Demolitions.

7. Camouflage

FM 5–20	Camouflage, Basic Principles.

8. Other Technical Publications

FM 21–6	List of Publications for Training.
FM 21–7	List of War Department Films, Film Strips, and Recognition Film Slides.
FM 21–8	Military Training Aids.
FM 21–40	Defense Against Chemical Attack.
FM 24–6	Radio Operator's Manual, Army Ground Forces.
FM 24–11	Combined Operating Signals.
FM 24–18	Radio Communication.
TB SIG 5	Defense Against Radio Jamming.
TB SIG 13	Moistureproofing and Fungiproofing Signal Corps Equipment.
TB SIG 25	Preventive Maintenance of Power Cords.
TB SIG 66	Winter Maintenance of Ground Signal Equipment.
TB SIG 69	Lubrication of Ground Signal Equipment.
TB SIG 72	Tropical Maintenance of Ground Signal Equipment.
TB SIG 75	Desert Maintenance of Ground Signal Equipment.
TB SIG 143	Installation Instructions for Vehicular Radio Sets.
TM 1–455	Electrical Fundamentals.
TM 11–227	Signal Communication Equipment Directory, Radio Communication Equipment.
TM 11–300	Frequency Meter Set SCR–211–( ).
TM 11–310	Schematic Diagrams for Maintenance of Ground Radio Communication Sets.
TM 11–314	Antennas and Antenna Systems.
TM 11–333	Telephones EE–8, EE–8–A and EE–8–B.
TM 11–430	Batteries for Signal Communication Except those Pertaining to Aircraft.
TM 11–453	Shop Work.
TM 11–454	The Radio Operator.
TM 11–455	Radio Fundamentals.
TM 11–462	Signal Corps Reference Data.
TM 11–483	Suppression of Radio Noises (when published).
TM 11–496	Training Text and Applicatory Exercises for Amplitude-modulated Radio Sets.
TM 11–499	Radio Propagation Handbook.
TM 11–904–H	Power Units PE–95–G and PE–95–H.
TM 11–850–N	Radio Receivers BC–312–N, BC–312–NX, BC–342–N, BC–314–G, and BC–344–D.
TM 11–2737	Installation of Radio and Interphone Equipment in Shelter HO–17 (when published).
TM 38–250	Basic Maintenance Manual.

9. Forms

Unsatisfactory Equipment Report. (See fig. 151.)

10. List of Abbreviations

a-c	alternating-current
a-f	audio-frequency
a-v-c	automatic-volume-control
BFO	beat-frequency-oscillator
cps	cycles per second
c-w	continuous-wave
db	decibel(s)
d-c	direct current
h-f	high-frequency
i-f	intermediate-frequency
i-p-a	intermediate-power-amplifier
kc	kilocycle(s)
l-f	low-frequency
ma	milliampere(s)
mc	megacycle(s)
mmf	micromicrofarad(s)
m-o	master-oscillator
m-v-c	manual-volume-control

p-a ..... power-amplifier
r-f ..... radio-frequency

11. Glossary

See glossary, TM 11–455.

Table VIII. Continuity checks for cables and terminal strips

a. Radio Transmitter BC-610-E

Measured from	Ref symbol	Term or lead No.	Action or condition	Measured to	Resistance (in ohms)
Plug PL_1 (in modulator)	PL_1	7	Remove plug PL_1 from socket SO_1	Terminal 1 of terminal strip TS_1	0
		8	Remove plug PL_1 from socket SO_1	Terminal 3 of terminal strip TS_1	0
		9	Remove plug PL_1 from socket SO_1	Terminal 4 of terminal strip TS_1	0
		11	Remove plug PL_1 from socket SO_1	Terminal 5 of terminal strip TS_1	0
Plug PL_2 (in modulator)	PL_2	7	Remove plug PL_2 from socket SO_2	Terminal 7 of terminal strip TS_1	0
		8	Remove plug PL_2 from socket SO_2	Terminal 8 of terminal strip TS_1	0
		10	Remove plug PL_2 from socket SO_2	Terminal 10 of terminal strip TS_1	0
		11	Remove plug PL_2 from socket SO_2	Terminal 9 of terminal strip TS_1	0
		12	Remove plug PL_2 from socket SO_2	Terminal 11 of terminal strip TS_1	0
Plug PL_3 (in Modulator)	PL_3	1	Fuse FS_5 in operating condition. Remove plug PL_3 from socket SO_3	Terminal 5 of terminal strip TS_3	0
		1	Fuse FS_5 in operating condition. Remove plug PL_3 from socket SO_3	Terminal 5 of plug PL_3	0
		1	Fuse FS_5 in operating condition; lamp LM_3 in its socket. Remove plug PL_3 from socket SO_3	Terminal 6 of plug PL_3 *Note.* Setting of potentiometer R_{18} varies resistance reading.	9–21
		1	Fuses FS_1 and FS_5 in operating condition; lamp LM_3 in its socket; switch SW_1 at ON. Remove plug PL_3 from socket SO_3	Terminal 3 of plug PL_3 *Note.* Setting of potentiometer R_{18} varies resistance reading.	9–21
		1	Fuse FS_5 in operating condition; lamp LM_3 in its socket; switch SW_6 at ON. Remove plug PL_3 from socket SO_3 and plug PL_4 from socket SO_4	Terminal 11 of plug PL_4 *Note.* Setting of potentiometer R_{18} varies resistance reading.	9–21
		1	Fuse FS_5 in operating condition; lamp LM_3 in its socket; switch SW_3 at ON. Remove plug PL_3 from socket SO_3 and plug PL_4 from socket SO_4	Terminal 12 of plug PL_4 *Note.* Setting of potentiometer R_{18} varies resistance reading.	9–21
		1	Switch SW_7 at PHONE; fuse FS_5 in operating condition. Remove plug PL_3 from socket SO_3	Terminal 2 of plug PL_3	0
		4		Terminal 4 of terminal strip TS_3	0
		4	Switch SW_{12} closed. Remove plug PL_3 from socket SO_3	Terminal 6 of terminal strip TS_3	0
		4	Potentiometer R_{18} full counterclockwise. Remove plug PL_3 from socket SO_3	Terminal 6 of plug PL_3	15
		5	Fuses FS_2 and FS_4 in operating condition. Remove plug PL_3 from socket SO_3	Terminal 7 of plug PL_3	0
		7	Fuses FS_2 and FS_3 in operating condition; lamp LM_4 in its socket. Remove plug PL_3 from socket SO_3 and plug PL_4 from socket SO_4	Terminal 7 of plug PL_4	340
		7	Fuses FS_2 and FS_3 in operating condition; lamp LM_4 in its socket; switch SW_4 at NORMAL. Remove plug PL_3 from socket SO_3; remove plug PL_4 from socket SO_4	Terminal 8 of plug PL_4	1
		7	Fuses FS_2 and FS_3 in operating condition; lamp LM_4 in its socket; switch SW_4 at NORMAL. Remove plug PL_3 from socket SO_3	Terminal 1 of terminal strip TS_3	1
		7	Fuses FS_2 and FS_3 in operating condition; switch SW_7 at C.W. Remove plug PL_3 from socket SO_3	Terminal 2 of terminal strip TS_3	0
		7	Fuses FS_2 and FS_3 in operating condition; switch SW_7 at PHONE. Remove plug PL_3 from socket SO_4	Terminal 3 of terminal strip TS_3	0
		8	Remove plug PL_3 from socket SO_3	Terminal 7 of terminal strip TS_3	0

a. RADIO TRANSMITTER BC-610-E (Contd.)

Measured from	Ref symbol	Term or lead No.	Action or condition	Measured to	Resistance (in ohms)
Plug PL_4 (in modulator)	PL_4	9	Remove plug PL_4 from socket SO_4	Ground or chassis	500
		9	Potentiometer R_{12} full clockwise. Remove plug PL_4 from socket SO_4	Terminal 10 of plug PL_4	500
Plug PL_{11} (on meter panel)		1	Remove plug PL_{11} from socket SO_{11}	Terminal 5 of terminal strip TS_2	0
		2	Remove plug PL_{11} from socket SO_{11}	Terminal 8 of terminal strip TS_2	0
		3	Remove plug PL_{11} from socket SO_{11}	Terminal 6 of terminal strip TS_2	0
		4	Remove plug PL_{11} from socket SO_{11}	Terminal 9 of terminal strip TS_2	0
		5	Remove plug PL_{11} from socket SO_{11}	Terminal 7 of terminal strip TS_2	0
		6	Remove plug PL_{11} from socket SO_{11}	Terminal 10 of terminal strip TS_2	0
		7	Remove plug PL_{11} from socket SO_{11}	Terminal 12 of terminal strip TS_2	0
		8	Remove plug PL_{11} from socket SO_{11}	Terminal 11 of terminal strip TS_2	0
Socket SO_1 (in modulator)	SO_1	7	Remove plug PL_1 from socket SO_1	Ground or chassis	0
		8	Remove plug PL_1 from socket SO_1	Terminal 2 of socket SO_5	0
		9	Remove plug PL_1 from socket SO_1	Terminal 11 of socket SO_1	85
Socket SO_2 (in modulator)	SO_2	7	Remove plug PL_2 from socket SO_2; remove plug PL_3 from socket SO_3	Terminal 4 of socket SO_3	0
		7	Remove plug PL_2 from socket SO_2	Terminal 8 of socket SO_2	3
		7	Remove plug PL_2 from socket SO_2; remove plug PL_3 from socket SO_3	Terminal 5 of socket SO_3	3
		10	Remove plug PL_2 from socket SO_2; remove plug PL_4 from socket SO_4	Terminal 11 of socket SO_4	0
		11	Remove plug PL_2 from socket SO_2	Tap on resistor R_{11}	0
Socket SO_3 (in modulator)	SO_3	1	Remove plug PL_3 from socket SO_3	Terminal 6 of socket SO_3	1.5
		1	Remove plug PL_3 from socket SO_3	Terminal 1 of socket SO_5	0
		1	Remove plug PL_3 from socket SO_3	Terminal 3 of socket SO_5	1.5
		2	Remove plug PL_3 from socket SO_3	Terminal 6 of socket SO_3	280
		3	Remove plug PL_3 from socket SO_3	One side of socket SO_6	0
		7	Remove plug PL_3 from socket SO_3	Other side of socket SO_6	0
Socket SO_4 (in modulator)	SO_4	7	Remove plug PL_4 from socket SO_4	Terminal 8 of socket SO_4	16
		9	Remove plug PL_4 from socket SO_4	Terminal CT of transformer T_1 (2.5 volt winding)	3,200
		10	Remove plug PL_4 from socket SO_4	An open bias voltage contact on relay RY_3	0
		11	Switch SW_5 closed. Remove plug PL_3 from socket SO_3; remove plug PL_4 from socket SO_4	Terminal 8 of socket SO_3	80
Socket SO_5 (in modulator)	SO_5	8		Ground or chassis	0
		6		Terminal 7 of socket SO_5	37
		5		Terminal 8 of socket SO_5, ground, or chassis	180
		4	Remove plug PL_4 from socket SO_4	Terminal 11 of socket SO_4	0
Sockets SO_7, SO_8, and SO_9 (in tuning unit)	SO_7	1	Switch SW_{11} at position 1	Terminal 5 of tube V_8 (JAN-6V6)	0
	SO_7	1	Switch SW_{11} at position 2 or 3	Ground or chassis	0
	SO_8	1	Switch SW_{11} at position 2	Terminal 5 of tube V_8 (JAN-6V6)	0
	SO_8	1	Switch SW_{11} at position 1 or 3	Ground or chassis	0
	SO_9	1	Switch SW_{11} at position 3	Terminal 5 of tube V_8 (JAN-6V6)	0
	SO_9	1	Switch SW_{11} at position 1 or 2	Ground or chassis	0
	SO_7, SO_8, SO_9	2		Ground or chassis	0

a. RADIO TRANSMITTER BC-610-E (Contd.)

Measured from	Ref symbol	Term or lead No.	Action or condition	Measured to	Resistance (in ohms)
Socket SO_7, SO_8, and SO_9 (in tuning unit) (Contd.)	SO_7	4	Switch SW_{11} at position 1	One side only of capacitor C_1	0
	SO_8	4	Switch SW_{11} at position 2	One side only of capacitor C_1	0
	SO_9	4	Switch SW_{11} at position 3	One side only of capacitor C_1	0
	SO_7, SO_8, SO_9	7		Terminal 9 of terminal strip TS_2	20
	SO_7	8	Switch SW_{11} at position 1	Terminal 3 of socket for tube V_9 (JAN-6L6)	0
	SO_7	8	Switch SW_{11} at position 2 or 3	Terminal 7 of sockets SO_8 and SO_9	0
	SO_8	8	Switch SW_{11} at position 2	Terminal 3 of socket for tube V_9 (JAN-6L6)	0
	SO_8	8	Switch SW_{11} at position 1 or 3	Terminal 7 of sockets SO_7 and SO_9	0
	SO_9	8	Switch SW_{11} at position 3	Terminal 3 of socket for tube V_9 (JAN-6L6)	0
	SO_9	8	Switch SW_{11} at position 1 or 2	Terminal 7 of sockets SO_7 and SO_8	0
	SO_7, SO_8, SO_9	10		Ground or chassis	0
	SO_7, SO_8, SO_9	11		Terminal 10 of terminal strip TS_2	20
	SO_7	11	Switch SW_{11} at position 2 or 3	Terminal 12 of socket SO_7	0
	SO_8	11	Switch SW_{11} at position 1 or 3	Terminal 12 of socket SO_8	0
	SO_9	11	Switch SW_{11} at position 1 or 2	Terminal 12 of socket SO_9	0
	SO_7	12	Switch SW_{11} at position 1	Plate caps of tubes V_{10} and V_{11}	0
	SO_8	12	Switch SW_{11} at position 2	Plate caps of tubes V_{10} and V_{11}	0
	SO_9	12	Switch SW_{11} at position 3	Plate caps of tubes V_{10} and V_{11}	0
Socket SO_{11} (on upper control panel)	SO_{11}	1	Meter switch SW_8 at DOUBLER PLATE. Remove plug PL_{11} from socket SO_{11}	Terminal 3 of socket SO_{11}	.6
		2	Meter switch SW_8 at DOUBLER PLATE. Remove plug PL_{11} from socket SO_{11}	Terminal 4 of socket SO_{11}	.6
		2	Meter switch SW_8 at DOUBLER PLATE. Remove plug PL_{11} from socket SO_{11}	Terminal 6 of socket SO_{11}	.4
		3	Meter switch SW_8 at DOUBLER PLATE. Remove plug PL_{11} from socket SO_{11}	Terminal 5 of socket SO_{11}	500
		7	Remove plug PL_{11} from socket SO_{11}	Ground or chassis	0
		8	Remove plug PL_{11} from socket SO_{11}	One side of socket for lamp LM_1	0
Terminal strip TS_1	TS_1	1		Ground or chassis	0
		1		Terminal 8 of terminal strip TS_2	35,000
		1		Terminal 12 of terminal strip TS_2	0
		1	Remove tube V_{16} from its socket	Terminal 3 of terminal strip TS_2	0
		1	Remove tube V_{16} from its socket	Terminal 4 of terminal strip TS_2	0
		1	Remove lamp LM_2 from its socket. Remove plug PL_{11} from socket SO_{11}	Terminal 11 of terminal strip TS_2	0
		3		Terminal 8 of socket for tube V_8 (JAN-6V6)	70
		4		Terminal 2 or 3 of socket for tube V_{12} (JAN-5Z3)	0
		5		Terminal 2 or 3 of socket for tube V_{12} (JAN-5Z3)	0

a. Radio Transmitter BC-610-E (Contd.)

Measured from	Ref symbol	Term or lead No.	Action or condition	Measured to	Resistance (in ohms)
Terminal strip TS_1 (Contd.)		7	Tubes V_{13}, V_{14}, V_{15} in their sockets	Terminal 8 of terminal strip TS_1	1.0
		9		Terminal 6 of terminal strip TS_2	0
		10	Switches SW_2, *SW_{10}, SW_{13} closed	Terminal 11 of terminal strip TS_1	0
Terminal strip TS_2	TS_2	3		One side of meter M_3	0
		4		Other side of meter M_3	0
		5		Grid connection of tube V_{16}	20
		7		Terminal 3 of sockets for tubes V_{10} and V_{11}	5,000
		9		Terminal 4 of socket for tube V_9	50,000
		10		Terminal 2 of sockets for tubes V_{10} and V_{11}	20,000
		12		Ground or chassis	0
Terminal strip TS_3	TS_3	1		Terminal 0 of transformer T_6	0
		2		Terminal 2600 of transformer T_6	0
		3		Terminal 2000 of transformer T_6	0
		4		Terminal 5 of terminal strip TS_3	1
		4	Relay RY_2 at normal	Terminal 7 of terminal strip TS_3	3
		6		An open contact on relays RY_2 and RY_5	775
		8		Ground or chassis	75,000
		8		+side of meter M_2	0
		9		Ground or chassis	0

* SW_{10} was omitted on models beginning with Serial No. 5191 on Signal Corps Order No. 30204-P-44 and on all transmitters thereafter.

b. Speech Amplifier BC-614-E

Measured from	Ref symbol	Term or lead No.	Action or condition	Measured to	Resistance (in ohms)
Socket SO_{101} (marked DYNAMIC MIC. 3)	SO_{101}	1		Ground or chassis	0
		2		Terminal 4 of socket SO_{102}	0
		2		Tip contact of jack J_{102}	0
		3		Terminal 3 of socket SO_{102}	500,000
Socket SO_{102}	SO_{102}	1		Terminal 3 or 6 of tube V_{106} (JAN-6N7)	500
		2		Tip contact of jack J_{101}	0
		2		Terminal 2 of socket SO_{103}	0
		5		Ground or chassis	7,000
		6		Terminal 4 of socket SO_{103}	0
		7		Terminal 3 of socket SO_{103}	0
		7		Terminal 1 of socket SO_{103}	16
		8		Ground or chassis	0
Socket SO_{103}	SO_{103}	5		Positive terminal of meter M_{101}	0
		6		Ground or chassis	35
		6		Terminal 7 of socket SO_{103}	35
		8		Ground or chassis	0
Transformer T_{103}	T_{103}	CT		Ground or chassis	311
		CT	Insert dummy phone plug in Jack J_{102}	Ground or chassis	511 *375

* This reading applied on all Signal Corps orders except Signal Corps Order No. 14153-P-43.

c. JUNCTION BOX JB-70-A

Measured from	Ref symbol	Term or lead No.	Action or condition	Measured to	Resistance (in ohms)
Terminal strip TS_{200}	TS_{200}	1	Switch SW_{203} at TRANS. ON	Terminal 2 of terminal strip TS_{200}	0
		3	Switch SW_{205} at TO BC-312 or TO BC-342	Terminal 4 of terminal strip TS_{200}	0
		3	Hold relay RY_{200} closed	Ground or chassis	0
		6	Switch SW_{202} at position 1, 3, or 5	Ground or chassis	0
		6	Switch SW_{202} at position 2, or 4; switch SW_{203} at TRANS. ON	Terminal 11 of terminal strip TS_{200}	0
		8		Terminal 12 of terminal strip TS_{200}	0
		12		Other side of EE-8 in chest CH-120	0
		12		Sleeves of jacks J_{200}, J_{201}, J_{202}, J_{203}, J_{204}, and J_{205}	0
		12		Ground or chassis	0
Note. Disconnect all interconnecting cables when making the following checks except connections to terminal strip TS_{200}.					
Plug PL_{200}	PL_{200}	1		Terminal 4 of terminal strip TS_{200}	0
		2		Terminal 3 of terminal strip TS_{200}	0
		3		Terminal 6 of terminal strip TS_{200}	0
		4		Terminal 7 of terminal strip TS_{200}	0
		5		Terminal 5 of terminal strip TS_{200}	0
		6		Terminal 2 of terminal strip TS_{200}	0
		7		Terminal 1 of terminal strip TS_{200}	0
		8		Terminal 8 of terminal strip TS_{200}	0
Plug PL_{201} (to Loudspeaker LS-3 in Chest CH-20)	PL_{201}	Tip		Terminal 9 of terminal strip TS_{200}	0
		Sleeve		Terminal 12 of terminal strip TS_{200}	0
Plug PL_{202} (to BC-342 PHONE 2ND AUDIO)	PL_{202}	Tip	Receiver output transpose switch in NORMAL position	Terminal 9 of terminal strip TS_{200}	0
		Sleeve		Terminal 12 of terminal strip TS_{200}	0
Socket SO_{200} (power input)	SO_{200}	1	Press STOP button to close switch SW_{206A}	Terminal 4 of socket SO_{200}	0
		2		One side of sockets SO_{201} and SO_{202}	0
		2		One side of sockets SO_{207}, SO_{208}, and SO_{209}	0
		2		A-c contact of socket SO_{203}	0
		3	Switch SW_{207} at PE-95	Terminal 4 of socket SO_{204}	0
		3	Switch SW_{207} at PE-95	Terminal 7 of terminal strip TS_{200}	200
		3	Switch SW_{207} at PE-95; switch SW_{200} at BC-312 ON. Hold relay RY_{200} closed	Terminal 2 of socket SO_{204}	0
		3	Switch SW_{207} at PE-95; switch SW_{201} at BC-342 ON. Hold relay RY_{200} closed	Terminal 2 of socket SO_{205}	0
		3	Switch SW_{207} at PE-95; switch SW_{200} at ON. Hold relay RY_{200} closed	Terminal 2 of socket SO_{204}	0
		3	Switch SW_{207} at PE-95; switch SW_{201} at ON. Hold relay RY_{200} closed	Terminal 2 of socket SO_{205}	0
		3	Switch SW_{207} at PE-95; switch SW_{203} at TRANS. ON	Tip contact of jacks J_{200} and J_{201}	100
		3	Switch SW_{207} at PE-95; switch SW_{203} at TRANS. ON. Switch SW_{202} at position 1 or 5	One side of the remote line	100
		3	Switch SW_{207} at PE-95; switch SW_{203} at TRANS ON; switch SW_{202} at position 2 or 4	Ground or chassis	100

c. JUNCTION BOX JB-70-A (Contd.)

Measured from	Ref symbol	Term or lead No.	Action or condition	Measured to	Resistance (in ohms)
Socket SO_{200} (power input) (Contd.)		4		Ground or chassis	0
		5		One side of sockets SO_{201} and SO_{202}	0
		5		One side of duplex sockets SO_{207}, SO_{208}, and SO_{209}	0
		5		One a-c terminal of socket SO_{203}	0
		6	Press START button to close switch SW_{206A}	Terminal 4 of socket SO_{200}	0
Socket SO_{203} (on Rectifier RA-63-(*))	SO_{203}	+12V	Switch SW_{207} at AUX	Terminal 4 of socket SO_{204}	0
Socket SO_{204}	SO_{204}	1		One side of the remote line	0
		1		Ground or chassis	0
		3		Ground or chassis	0
Socket SO_{205}	SO_{205}	1		Ground or chassis	0
		3		Ground or chassis	0
Socket SO_{206} (duplex spare)	SO_{206}	Either GND terminal		Ground or chassis	0
Socket SO_{210} (audio cord)	SO_{210}	1		Tip contact of jacks J_{202} and J_{203}	5,000
		1	Switch SW_{205} at TO BC-312	Terminal 5 of terminal strip TS_{200}	5,000
		1	Switch SW_{204} at NORMAL	Terminal 2 of socket SO_{210}	0
		1	Switch SW_{204} at TRANSPOSE	Terminal 10 of terminal strip TS_{200}	0
		2	Switch SW_{204} at TRANSPOSE	Terminal 9 of terminal strip TS_{200}	0
		2	Switch SW_{204} at TRANSPOSE	Tip contact of jacks J_{204} and J_{205}	5,000
		2	Switch SW_{205} at TO BC-342; switch SW_{204} at TRANSPOSE	Terminal 5 of terminal strip TS_{200}	5,000
		3		Ground or chassis	0
		4		Ground or chassis	0

Table IX. Data for checking transformers, chokes, and inductors

Note. Resistances of less than 1 ohm are given as 0. All measurements are made with windings disconnected from the associated circuit.

a. Radio Transmitter BC-610-E and Antenna Tuning Unit BC-939-A.

Component		Ref symbol	Windings or termina's	D-c resistance (in ohms)	Inductance (in microhenries)
R-f choke		CH_1		20	1,000
R-f choke		CH_2		20	1,000
R-f choke		CH_3		32	2,500
R-f choke		CH_4		8.5	2,500
R-f choke		CH_5		20	1,000
R-f choke		CH_6		20	1,000
R-f choke		CH_7		20	1,000
R-f choke		CH_8		20	1,000
R-f choke		CH_9		42	10,000
Filter choke		L_1		90	6×10^6
Filter choke		L_2		125	6×10^6
Filter choke		L_3		125	6×10^6
Filter choke		L_4		58	11×10^6
Antenna coupling coil		L_5			1.8
Antenna loading coil		L_6			100
Coil Unit C-387-B		L_7			58
Coil Unit C-388-A		L_7			32
Coil Unit C-389-A		L_7			18
Coil Unit C-390-A		L_7			12
Coil Unit C-447		L_7			5.9
Coil Unit C-448		L_7			3.5
Coil Unit C-449		L_7			2
Antenna loading coil		L_{44}			14
Tuning unit					
M-o grid coil	TU-47	L_8			89
M-o grid coil	TU-48	L_9			55.5
M-o grid coil	TU-49	L_{10}			41.0
M-o grid coil	TU-50	L_{11}			21.4
M-o grid coil	TU-51	L_{12}			14.1
M-o grid coil	TU-52	L_{13}			7.4
Crystal-oscillator cathode coil	TU-47	L_{14}			37
Crystal-oscillator cathode coil	TU-48	L_{15}			19
Crystal-oscillator cathode coil	TU-49	L_{16}			9.2
Crystal-oscillator cathode coil	TU-50	L_{17}			66.0
Crystal-oscillator cathode coil	TU-51	L_{18}			22.8
Crystal-oscillator cathode coil	TU-52	L_{19}			18.0
Buffer-doubler plate coil	TU-47	L_{20}			40
Buffer-doubler plate coil	TU-48	L_{21}			30.8
Buffer-doubler plate coil	TU-49	L_{22}			20.6
Buffer-doubler plate coil	TU-50	L_{23}			12.6
Buffer-doubler plate coil	TU-51	L_{24}			8.6
Buffer-doubler plate coil	TU-52	L_{25}			5.66
Intermediate-amplifier plate coil	TU-47	L_{26}			40
Intermediate-amplifier plate coil	TU-48	L_{27}			30.8
Intermediate-amplifier plate coil	TU-49	L_{28}			20.6
Intermediate-amplifier plate coil	TU-50	L_{29}			12.6
Intermediate-amplifier plate coil	TU-51	L_{30}			8.6
Intermediate-amplifier plate coil	TU-52	L_{31}			5.66
M-o grid coil	TU-53	L_{32}			7.5
Buffer-doubler plate coil	TU-53	L_{33}			2.56
Intermediate-amplifier plate coil	TU-53	L_{34}			2.56
M-o grid coil	TU-54	L_{35}			12.7
Buffer-doubler plate coil	TU-54	L_{36}			4.84
Intermediate-amplifier plate coil	TU-54	L_{37}			1.15
Crystal-oscillator cathode coil	TU-53	L_{41}			8.0
Crystal-oscillator cathode coil	TU-54	L_{42}			14.2
Power transformer		T_1	500-0-500-volt secondary;	135	
			117-volt primary;	1.5	
			2.5-volt, 5.0-amp secondary.	0	
			5.0-volt, 3.0-amp secondary	0	
Filament transformer		T_2	117-volt primary;	11	
			100-volt primary;	10	
			2.5-volt 10-amp secondary	0	
Filament transformer		T_3	100-volt primary;	3	
			5-volt, 16-amp secondary	0	
Power transformer		T_4	100-volt primary;	2.0	
			5-volt, 10.5-amp secondary	0	

a. Radio Transmitter BC–610–E and Antenna Tuning Unit BC–939–A (Contd.).

Component	Ref symbol	Windings or terminals	D-c resistance (in ohms)	Inductance (in microhenries)
Power transformer (Contd.)		6.3-volt, 3.5 amp secondary;	0	
		5-volt, 3-amp secondary	0	
Power transformer	T_5	115-volt primary;	1.5	
		435-0-435 secondary	85	
Power transformer	T_6	2,000-volt primary tap;	0	
		2,600-volt primary tap;	0	
		total secondary	140	
Audio transformer	T_7	500 line primary;	35	
		G to G secondary;	950	
		G to CT secondary	475	
Audio transformer	T_8	P to P primary;	250	
		P to CT primary;	125	
		G to G secondary;	170	
		G to CT secondary	85	
Modulation transformer	T_9	P to P primary;	300	
		P to B primary;	150	
		P to B + secondary	135	
Relay winding	RY_1*		540	
Relay winding	RY_1		97	
Relay winding	RY_2		780	
Relay winding	RY_3		280	
Relay winding	RY_4		480	
Relay winding	RY_5		6	

* Supplied with Signal Corps Orders No. 14153–Phila–43 and 30204–Phila–43 only.

b. Speech Amplifier BC–614–E.

Component	Ref symbol	Windings or terminals	D-c resistance (in ohms)	Inductance (in microhenries)
Audio transformer	T_{101}	1 to 2;	11	
		3 to 4	13.5	
Audio transformer	T_{102}	1 to 3;	660	
		2 to 3; or		
		1 to 2;	330	
		4 to 5	35	
Power transformer	T_{103}	115-volt primary;	16	
		6.3-volt, 2-amp secondary;	0	
		5-volt, 2-amp secondary;	0	
		250-250 secondary	600	
Audio transformer	T_{104}	2 to 3;	3,750	
		8 to 5;	8,500	
		8 to 7; or		
		6 to 5	4,500	
Filter choke	CH_1		700	29

c. Junction Box JB–70–A.

Component	Ref symbol	Windings or terminals	D-c resistance (in ohms)	Inductance (in microhenries)
Relay winding	RY_{200}		200	1.5

Table X. Performance Characteristics

Description	Indicating meter	Meter switch position	Normal	Limits	
				Maximum	Minimum
Line voltage (a-c)			115 volts	125 volts	105 volts
Filament voltage	FIL. VOLTAGE		5.0 volts	5.3 volts	4.9 volts
Buffer-doubler plate current	EXCITATION METER	DOUBLER PLATE	35 ma		25 ma
Intermediate-amplifier grid current	EXCITATION METER	INT. AMP. GRID	2 ma	8 ma	1 ma
Intermediate-amplifier plate current	EXCITATION METER	INT. AMP. PLATE	150 ma	175 ma	
P-a grid current (PLATE POWER OFF)	EXCITATION METER	P. A. GRID	75–100 ma		60 ma
P-a grid current (PLATE POWER ON)	EXCITATION METER	P. A. GRID	65–80 ma		50 ma
P-a plate current (PHONE)	P. A. PLATE		250 ma	260 ma	200 ma
P-a plate current (C.W.)	P. A. PLATE		290 ma	300 ma	200 ma
Modulator plate current (no modulation)	MODULATOR PLATE		40 ma	50 ma	35 ma
Modulator plate current (100% modulation)	MODULATOR PLATE		200 ma		
Power output (voice) (4 mc)			320 watts		210 watts
Power output (c-w)			500 watts		325 watts

Table XI. Characteristics of vacuum tubes

Signal Corps Tube	VT-46A	VT-80	VT-94	VT-95	VT-100	VT-103	VT-107	VT-115	VT-139	VT-145	VT-218	VT-220	VT-231	VT-233
JAN type	866A/866	80	6J5	2A3	807	6SQ7	6V6	6L6	OD3/VR-150	5Z3	100-TH	250-TH	6SN-7GT	6SR7
Description	Mercury vapor half-wave rectifier	High vacuum full-wave rectifier	Triode	Triode	Beam power	Duplex diode triode	Beam power	Beam power	Voltage regulator	High vacuum full-wave rectifier	Triode	Triode	Twin triode	Duplex diode triode
A-c filament voltage	2.5	5.0	6.3	2.5	6.3	6.3	6.3	6.3		5.0	5.0	5.0	6.3	6.3
A-c filament current (amp)	5.0	2.0	0.3	2.5	0.9	0.3	0.45	0.9		3.0	6.5	10.5	0.6	0.3
D-c plate voltage			250	300	600	250	300	375	150		2,000	2,500	250	250
D-c screen voltage					250		150	200						
D-c grid-bias voltage			−8.0	−62	−50	−2.0	−25	−35				−220	−8.0	−9.0
Max a-c voltage per plate		400								500				
Max inverse peak voltage	10,000	1,400								1,400				
D-c plate current (ma)			−9.0	40	100	0.8	35	88			225	290	9.0	9.5
D-c screen current (ma)					9.0		5	9						
D-c grid current (ma)					3.0		3.0	3.5				70		
Max d-c output current (ma)	250	110							30	250				
Plate dissipation (watts)					25		12	20			100	250		
Approx grid driving power (watts)					0.22			0.18				42		
Approx output power (watts)				15	37.5			17			380	600		0.3
Plate resistance (ohms)			7,700	800		91,000							7,700	8,500
Transconductance (microohms)			2,600	5,250		1,100							2,600	1,900
Amplification factor			20	4.2		100					30	32	20	16
Load resistance (ohms)				3,000							16,000			10,000

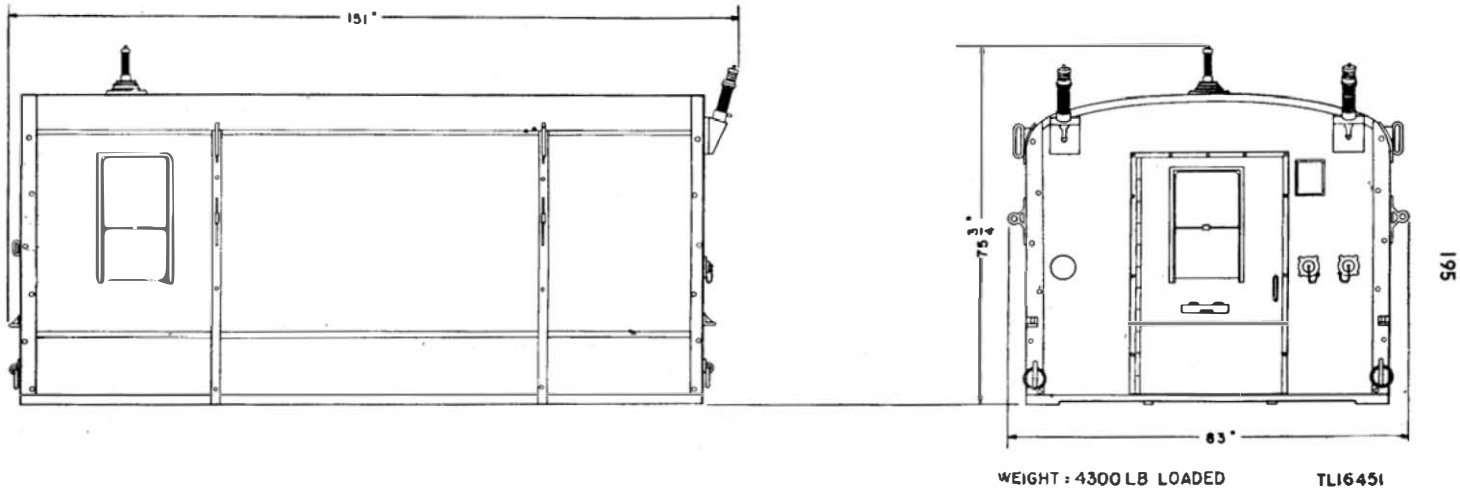

Figure 136. Shelter HO-17-A—dimensional outline sketch.

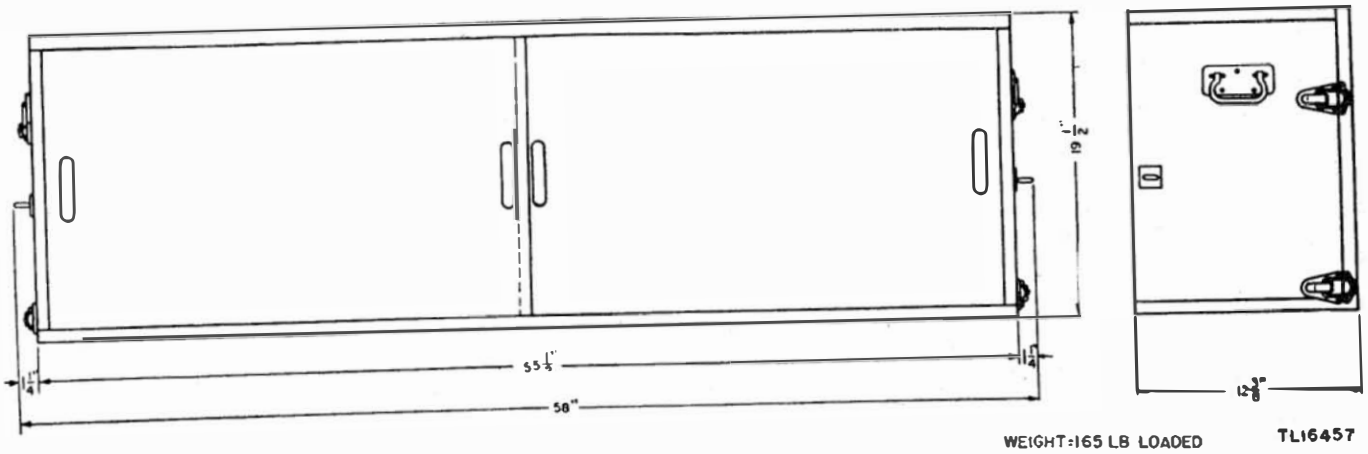

Figure 137. Chest CH-88-A—dimensional outline sketch.

81293 O—49——14

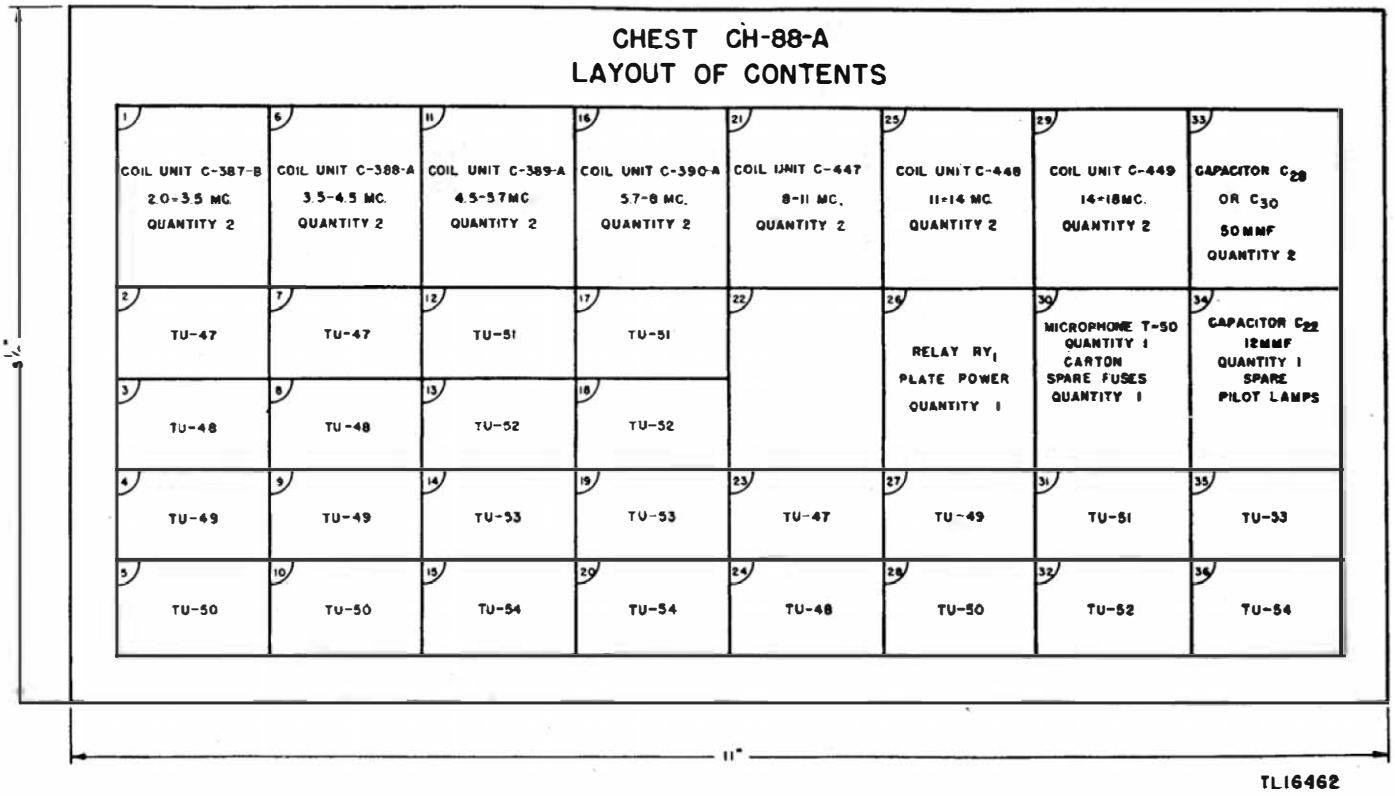

Figure 138. Chest CH-88-A--lay-out of contents.

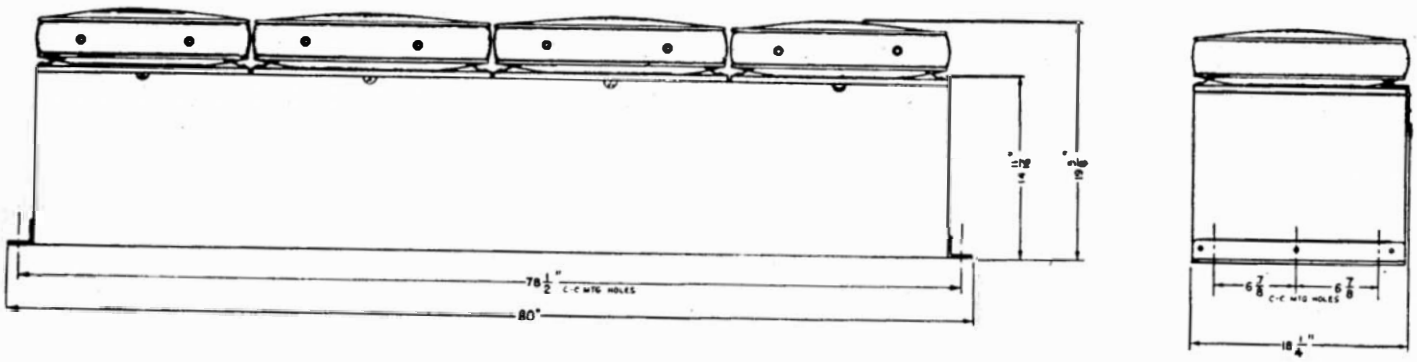

WEIGHT: 300 LB LOADED

TL16458

Figure 139. Chest CH-89-A—dimensional outline

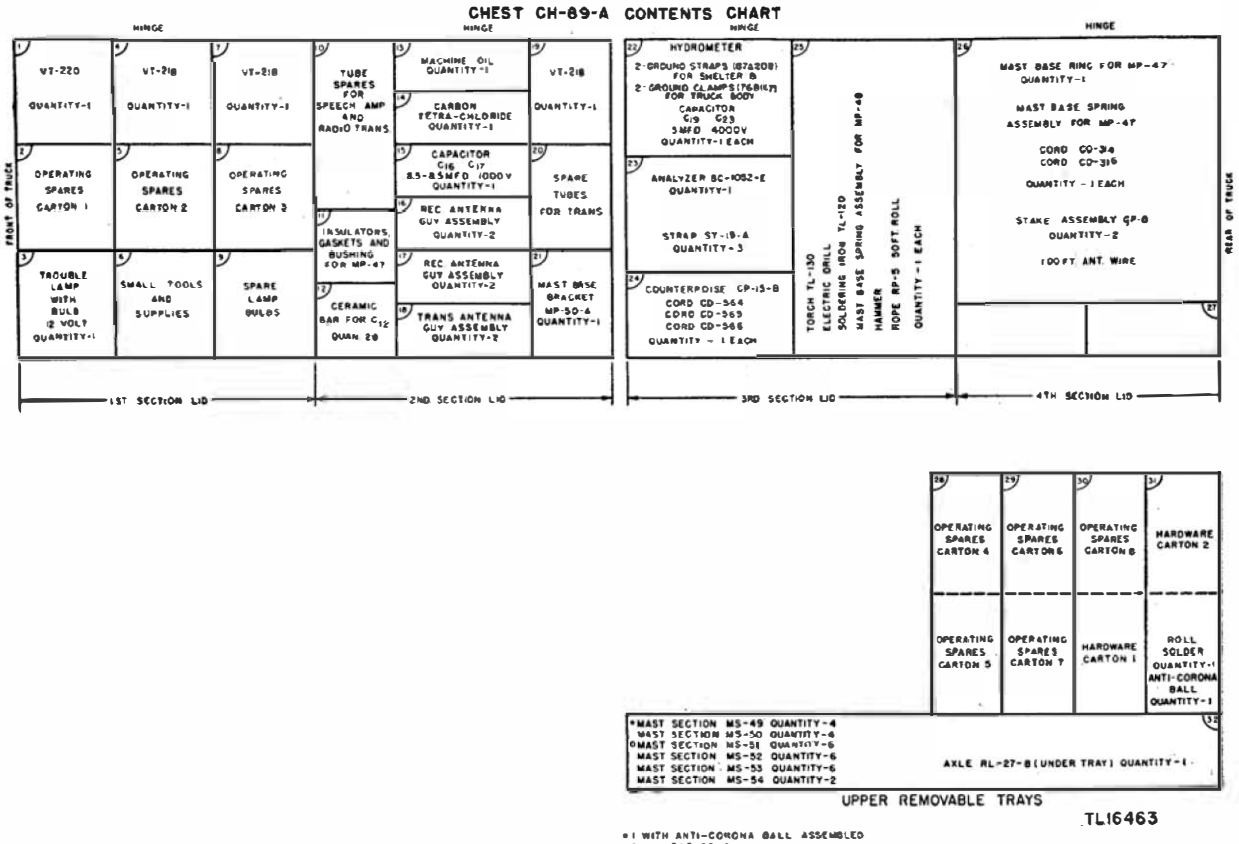

Figure 140. Chest CH--89-A—lay-out of contents.

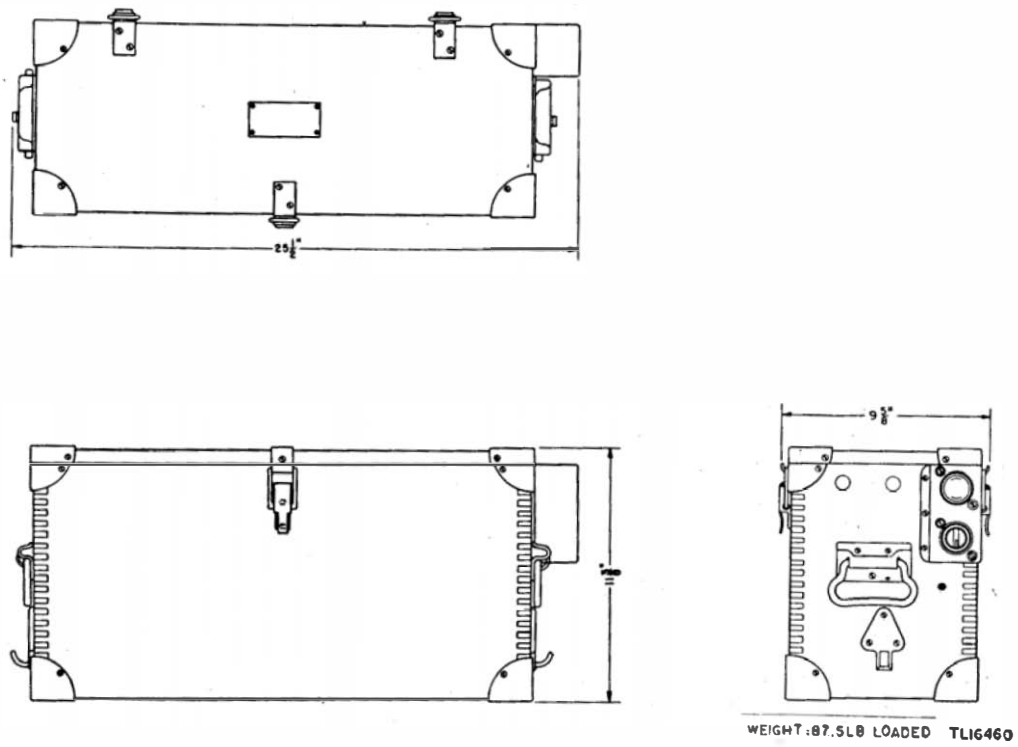

Figure 141. Chest CH-109-A—dimensional outline sketch.

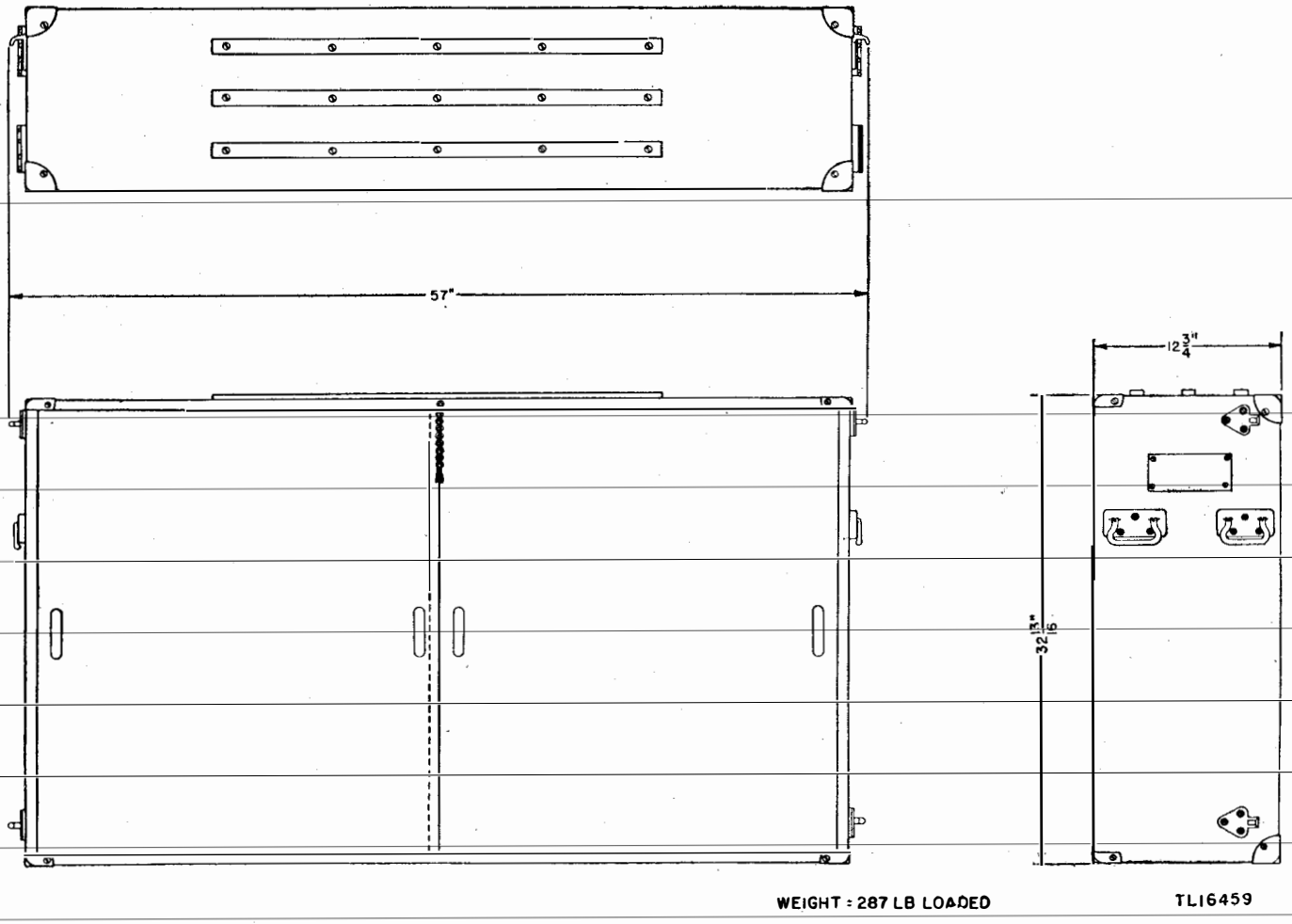

Figure 142. Chest CH-119-( )--dimensional outline sketch.

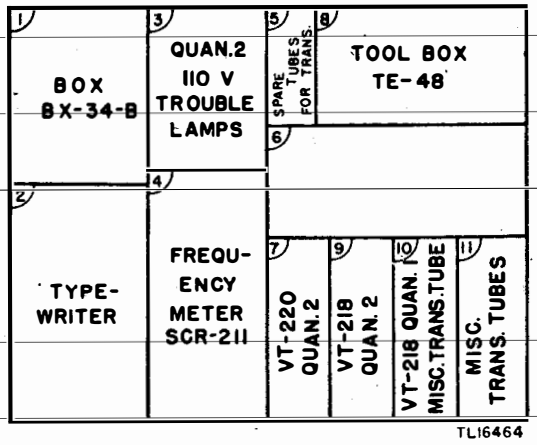

Figure 143. Chest CH-119-( )—lay-out of contents.

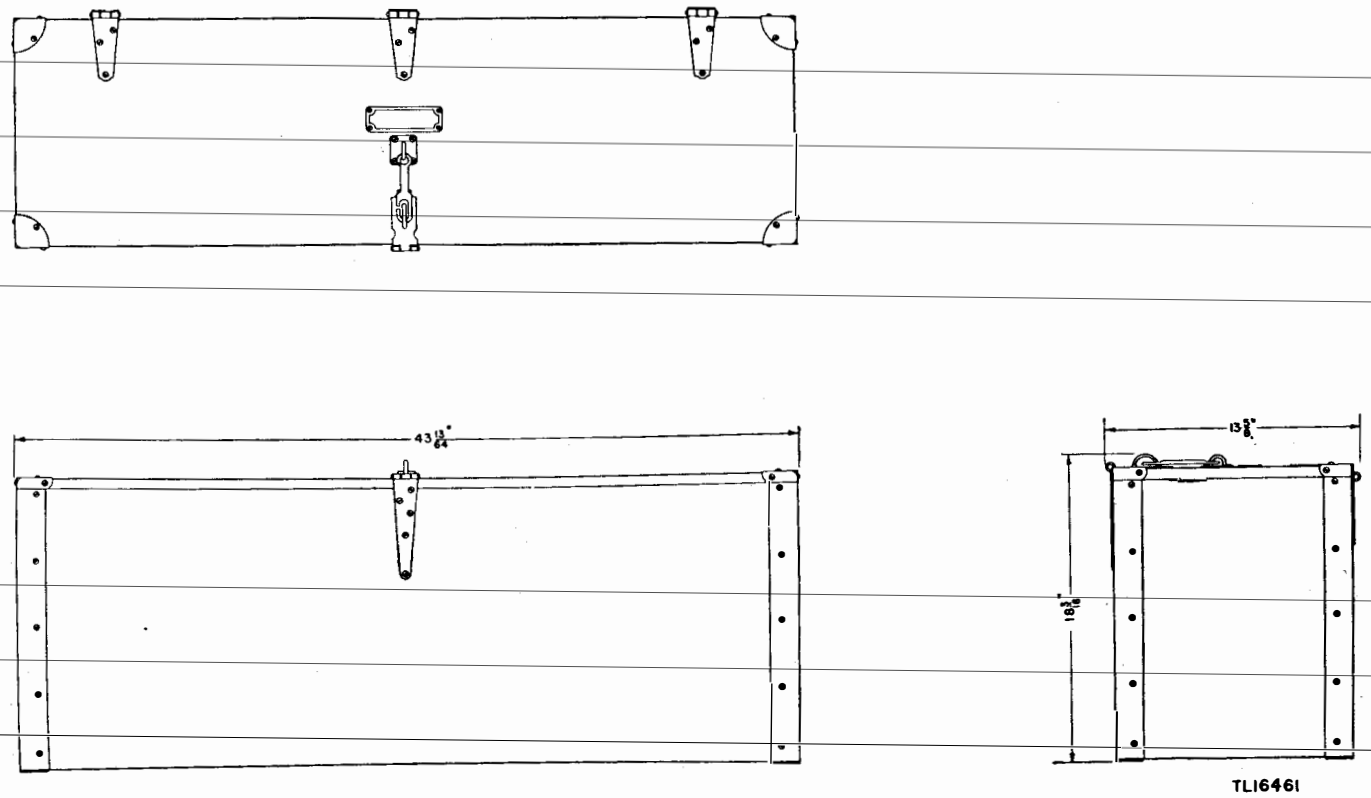

Figure 144. Chest CH-112-( )—dimensional outline sketch.

CHEST CH-112-B CONTENTS CHART

CORD	CD-659 (OPERATING)	QUANTITY-1
CORD	CO-335 (OPERATING)	QUANTITY-1
CORD	CO-652 (SPARE)	QUANTITY-1
CORD	CO-313 (SPARE)	QUANTITY-1

TL16465

Figure 145. Chest CH-112-B—contents chart.

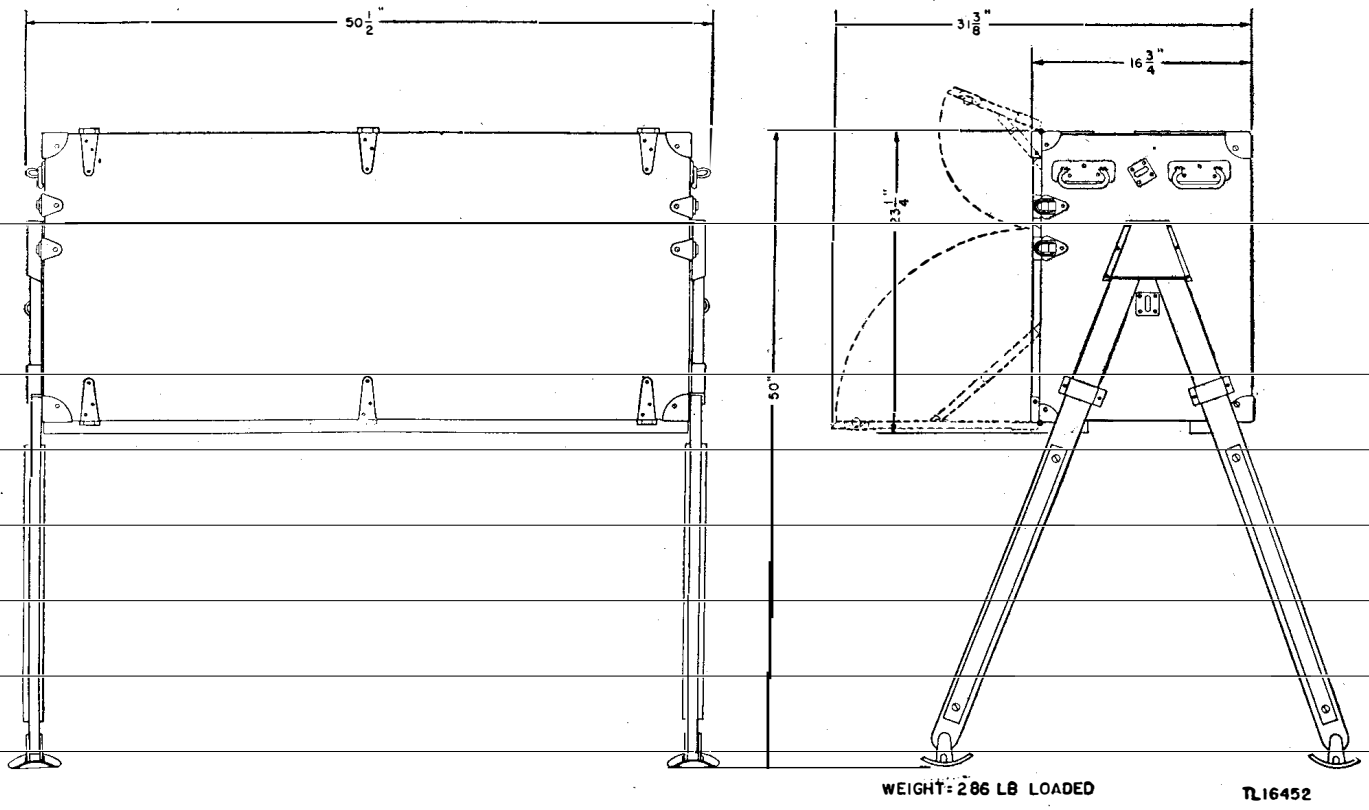

Figure 146. Chest CH-120-A—dimensional outline sketch.

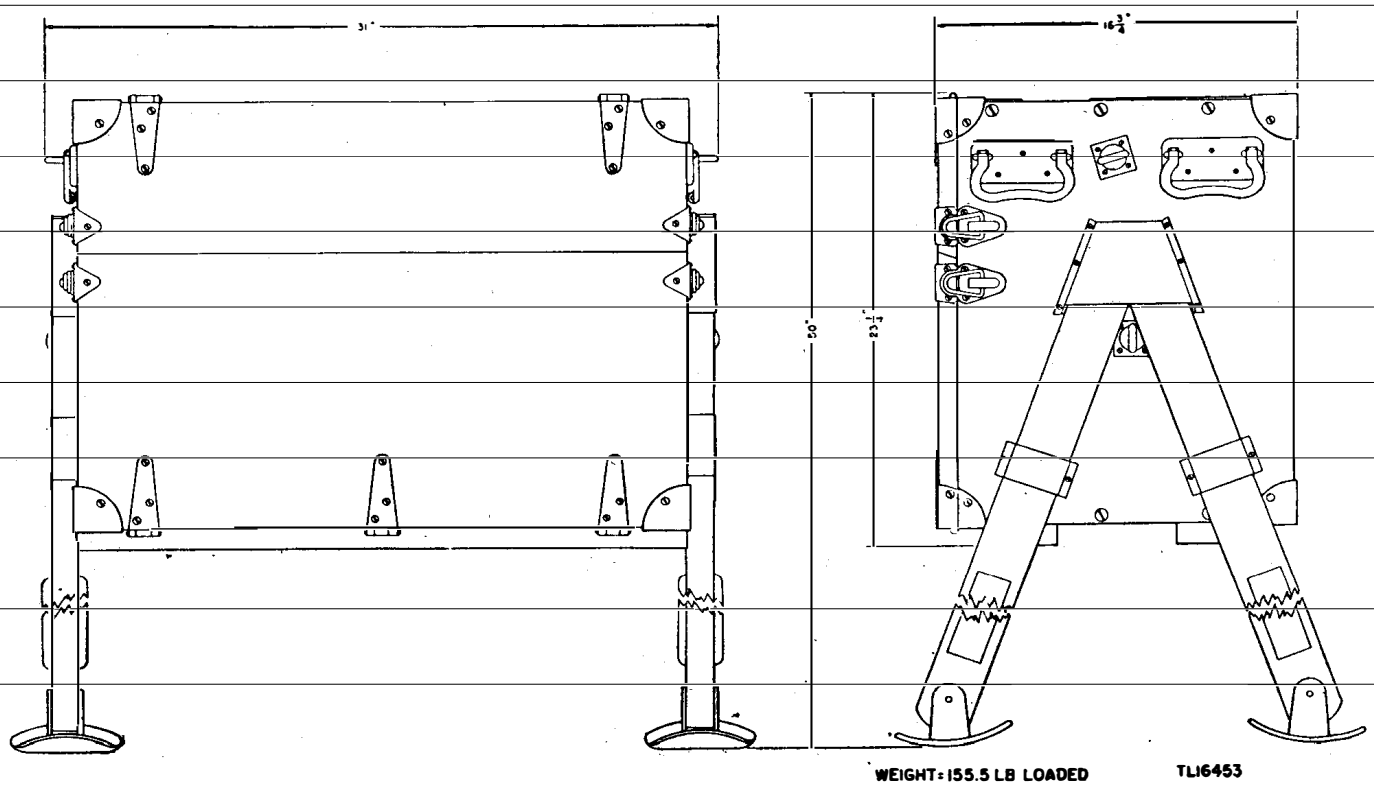

Figure 147. Chest CH-121-A—dimensional outline sketch.

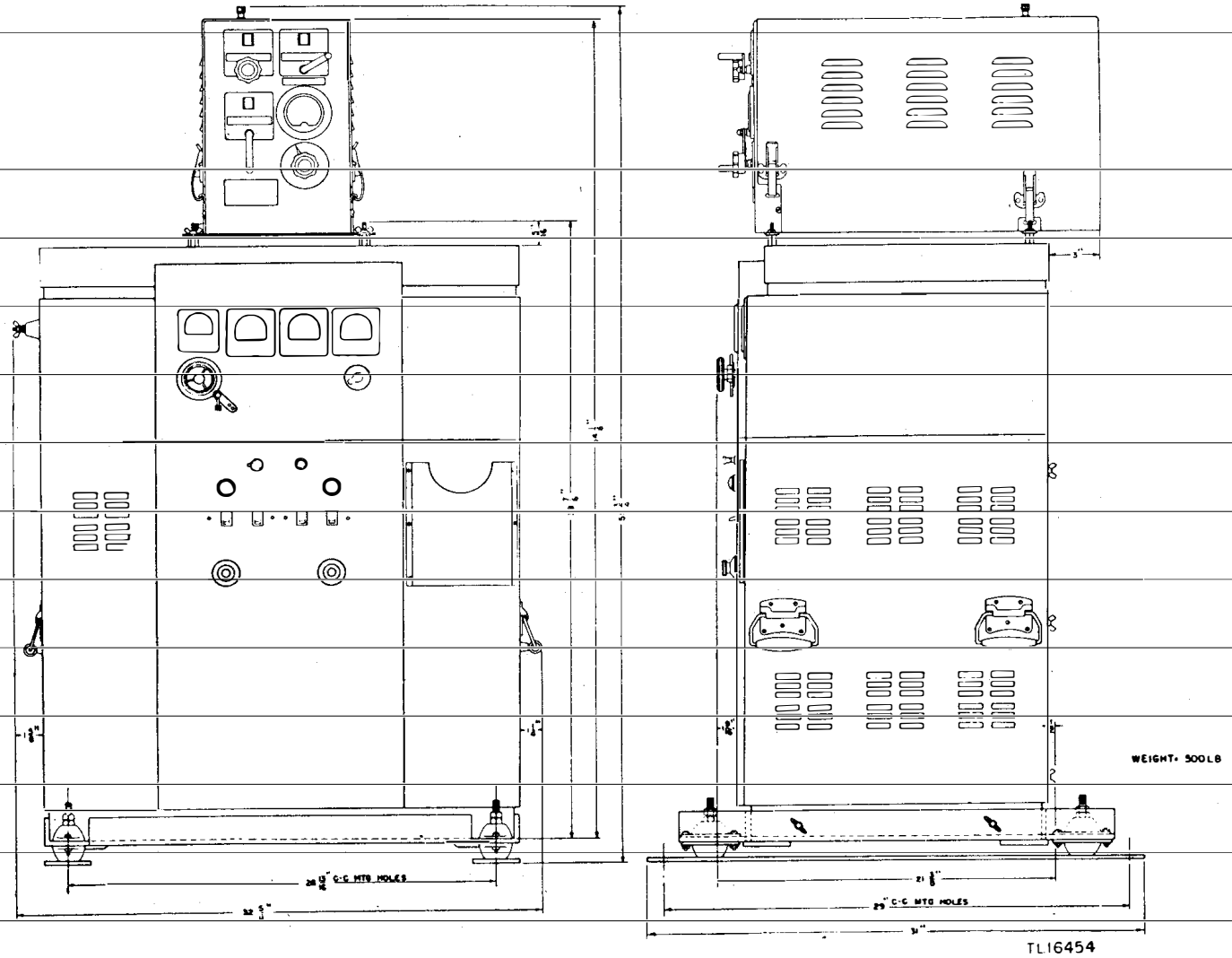

Figure 148. Radio Transmitter BC–610–E with Antenna Tuning Unit BC–939–A in position—dimensional outline sketch.

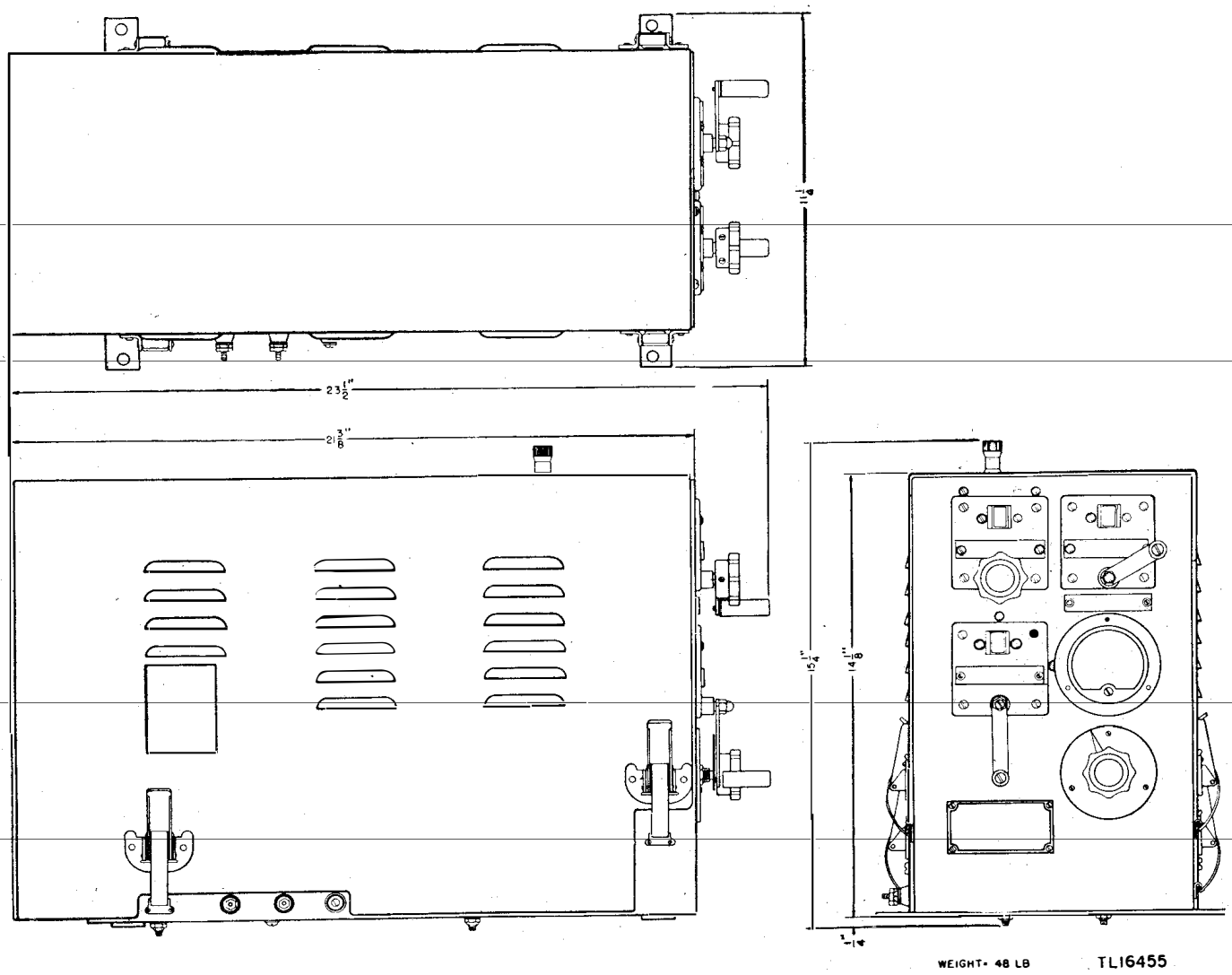

Figure 149. Antenna Tuning Unit BC-939-A—dimensional outline sketch.

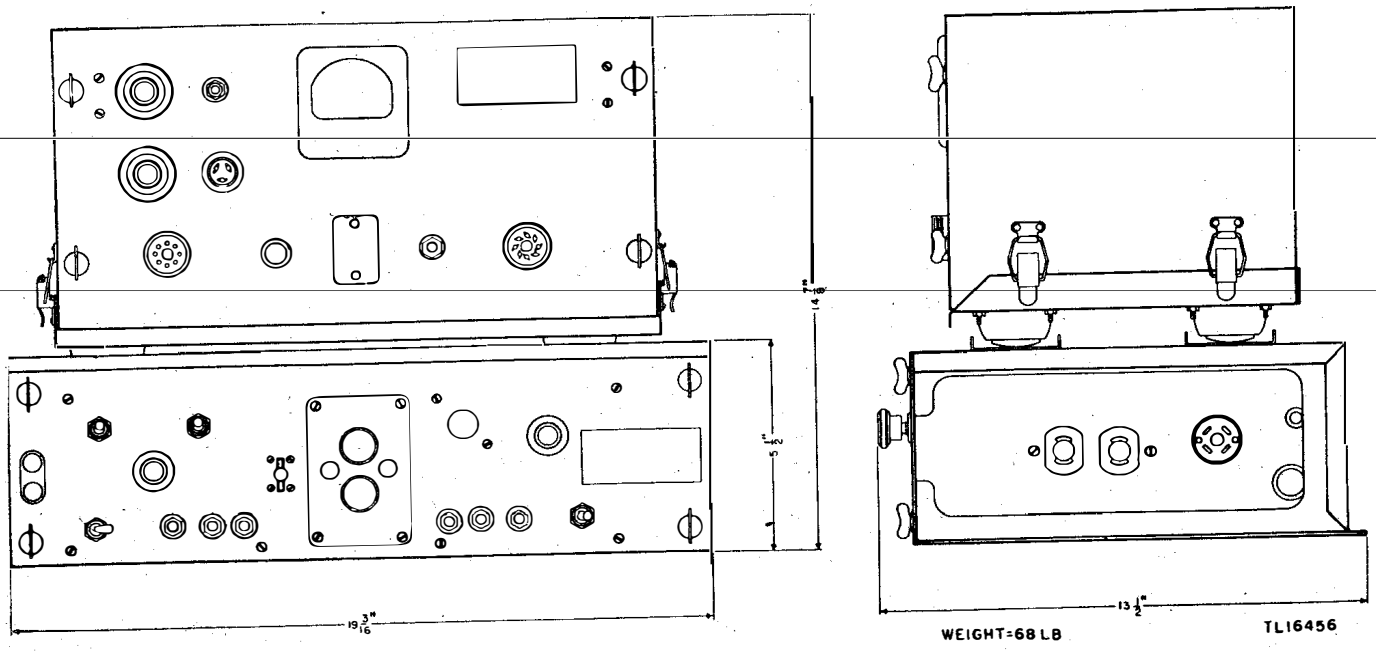

Figure 150. Junction Box JB-70-A with Speech Amplifier BC-614-E in position—dimensional outline sketch.

WAR DEPARTMENT

UNSATISFACTORY EQUIPMENT REPORT

FOR (Technical service) Signal Corps MATÉRIEL DATE 15 March 44

FROM (Organization) 579 Sig. Repair Co. (Station) APO 101 San Francisco, Cal.

TO (Next superior headquarters) Signal Officer IX Army (Station) (Technical service)

COMPLETE MAJOR ITEM

NOMENCLATURE: Radio Transmitter BC-610-E TYPE: Ground, vehicular

MODEL: E MANUFACTURER: The Hallicrafters Company

U. S. A. REG. NO.: Order No. 14153-Phila-43-07 SERIAL NO.: 628 DATE RECEIVED: 2 Feb 44

~~EQUIPMENT WITH WHICH USED (IF APPLICABLE)~~ Radio Set SCR-399-( ) in House HO-17

NOMENCLATURE OF DEFECTIVE COMPONENT

PART NO.: S.C. Stock No. 3088-34 TYPE: Capacitor (ref. symbol C20) fixed, 8 mf. - 10 + 50%, 600 v.d.c. electrolytic

MANUFACTURER: The Hallicrafters Company DATE INSTALLED: 14 Feb 44

LENGTH OF SERVICE

DATE OF INITIAL TROUBLE: 20 Feb 44

	TOTAL YEARS	MONTHS	DAYS
TIME INSTALLED	0	0	6

TOTAL PERIOD OF OPERATION BEFORE FAILURE (FILL IN WHERE APPLICABLE)

YEARS	MONTHS	DAYS	HOURS	MILES	ROUNDS
—	—	—	40	—	—

DESCRIPTION OF TROUBLE AND PROBABLE CAUSE

GIVE TYPE OF FAILURE, MECHANICAL, ELECTRICAL, WORKMANSHIP, MATERIAL, DESIGN

Capacitor C20 shorts out because of humid operating conditions

UNUSUAL SERVICE CONDITIONS

GIVE BRIEF DESCRIPTION

Operation in tropics

TRAINING OR SKILL OF USING PERSONNEL (CHECK ONE) POOR FAIR GOOD ✓

DESCRIPTION OF ANY REMEDIAL ACTION TAKEN

Radio set given moistureproofing and fungiproofing treatment. 2 Mar 44

RECOMMENDATIONS

Substitution of capacitor designed for tropical operation

1ST IND.

OFFICE STATION DATE

TO CHIEF (Technical service) Signal Officer Washington 25, D.C.

NAME STATION RANK

ORIGINATING OFFICER

SIGNATURE: E. A. Wilson

NAME: E. A. WILSON

RANK AND TITLE: Capt., Sig. C.

ORGANIZATION: 579 Sig. Repair Co.

INSTRUCTIONS

1. It is imperative that the Chief of Technical Service concerned be advised at the earliest practical moment of any constructional, design, or operational defect in matériel. This form is designed to facilitate such reports and to provide a uniform method of submitting the required data.

2. This form will be used for reporting manufacturing, design or operational defects in matériel with a view to improving and correcting such defects, and for use in recommending modifications of matériel.

3. This form will not be used for reporting failures, isolated material defects or malfunctions of matériel resulting from fair-wear-and-tear or accidental damage nor for the replacement, repair, or the issue of parts and equipment. It does not replace currently authorized operational or performance records.

4. Reports of malfunctions and accidents involving ammunition will con nue to be submitted as directed in the manner described in AR 750-10 (Change No. 3).

5. It will not be practicable or desirable in all cases to fill all blank spaces of the report. However, the report should be as complete as possible in order to expedite necessary corrective action. Additional p rtinent information not provided for in the blank spaces should be submitted as inclosures to the form. Photographs, sketches or other illustrative material are highly desirable.

6. When cases arise where it is necessary to communicate with a chief of service in order to assure safety to personnel, more expeditious means of communication are authorized. This form should be used to confirm reports made by more expeditious means.

7. This form will be made out by using or service organizations and forwarded in duplicate through command channels to the chief of technical service. The office of the chief of technical service receiving the report will forward an information copy to the Commanding General, Army Ground Forces or Army Air Forces, whichever is applicable, and to the Commanding General, Army Service Forces.

8. Necessity for using this form will be determined by the using or service troops.

W. D., A. G. O. Form No. 468
1 December 1943

16—37786-1 U. S. GOVERNMENT PRINTING OFFICE

TL15340

Figure 151. WD AGO Form 468.

CAPACITOR COLOR CODES

RMA 6-DOT COLOR CODE FOR MICA-DIELECTRIC CAPACITORS

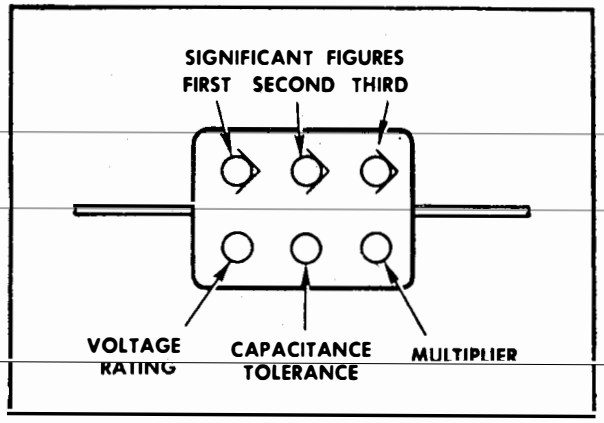

RMA 3-DOT COLOR CODE FOR MICA-DIELECTRIC CAPACITORS

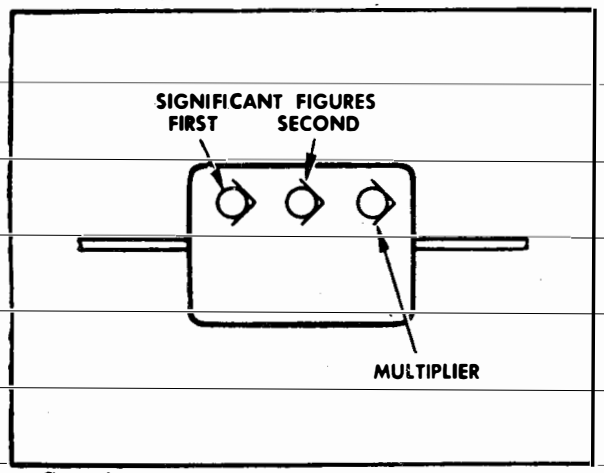

Capacitors marked with this code have a voltage rating of 500 volts.

AWS 6-DOT COLOR CODE FOR PAPER-DIELECTRIC CAPACITORS

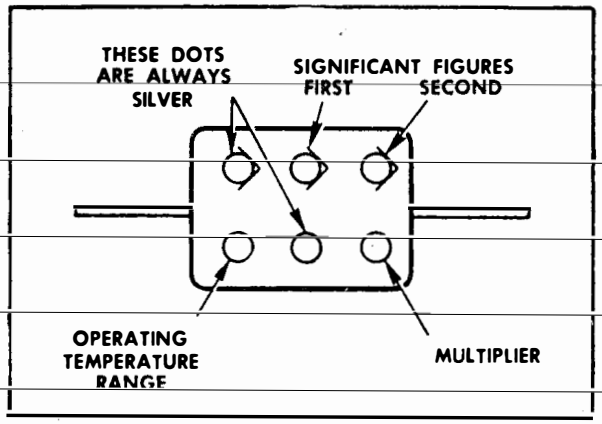

The silver dots serve to identify this marking. The sixth dot shows whether the capacitor has a maximum operating temperature of 167°F (black) or 185°F (brown)

COLOR	SIGNIFICANT FIGURE	MULTIPLIER: RMA MICA- AND CERAMIC-DIELECTRIC AWS MICA- AND PAPER-DIELECTRIC	MULTIPLIER: AWS CERAMIC-DIELECTRIC	VOLTAGE RATING (VOLTS)	CHARACTERISTIC (AWS MICA-DIELECTRIC)
BLACK	0	1	1		A
BROWN	1	10	10	100	B
RED	2	100	100	200	C
ORANGE	3	1000	1000	300	D
YELLOW	4	10,000		400	E
GREEN	5	100,000		500	F
BLUE	6	1,000,000		600	G
VIOLET	7	10,000,000		700	
GRAY	8	100,000,000	0.01	800	
WHITE	9	1,000,000,000	0.1	900	
GOLD		0.1		1000	
SILVER		0.01		2000	
NO COLOR				500	TL13417-1

Figure 152. Capacitor color codes.

AWS 6-DOT COLOR CODE FOR MICA-DIELECTRIC CAPACITORS

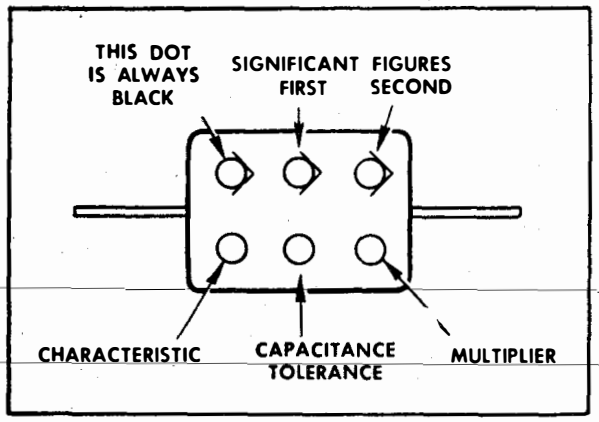

The black dot serves to identify the AWS marking. Capacitors marked with this code are rated at 500 volts, except the following AWS type CM35 capacitors with capacitances of 6,800, 7,500, and 8,200 micromicrofarads, and AWS type CM40 capacitors with capacitances of 9,100 and 10,000 micromicrofarads are rated at 300 volts.

RMA: *Radio Manufacturers Association*

AWS: *American War Standard (American Standards Association)*

NOTE: These color codes give all capacitances in *micromicrofarads*.

AWS COLOR CODE FOR TUBULAR CERAMIC-DIELECTRIC CAPACITORS

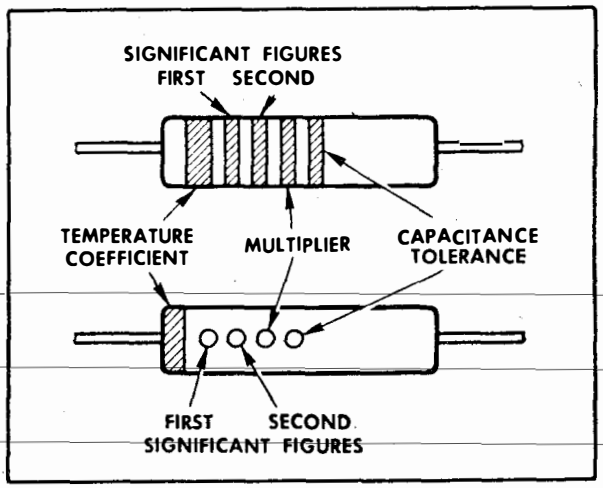

Capacitors marked with this code have a voltage rating of 500 volts.

RMA COLOR CODE FOR TUBULAR CERAMIC-DIELECTRIC CAPACITORS

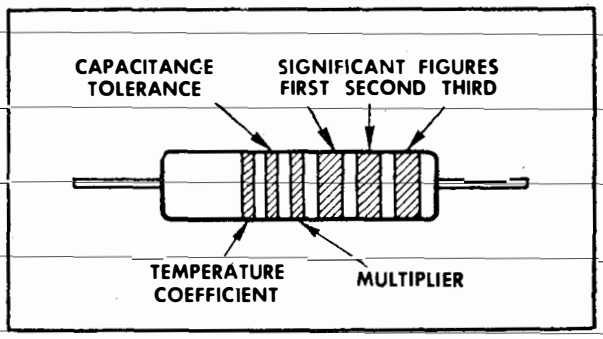

Capacitors marked with this code have a voltage rating of 500 volts.

CAPACITANCE TOLERANCE				TEMPERATURE COEFFICIENT OF CAPACITANCE $\times 10^{-6}$ MMF/MMF/°C
RMA & AWS MICA- AND PAPER-DIELECTRIC (PERCENT)	RMA CERAMIC-DIELECTRIC (PERCENT)	AWS CERAMIC-DIELECTRIC GREATER THAN 10 MMF (PERCENT)	AWS CERAMIC-DIELECTRIC LESS THAN 10 MMF (MMF)	
20	20	20	2.0	0
1	1	1		− 30
2	2	2		− 80
3	3	2.5	0.25	−150
4	4			−220
5	5	5	0.5	−330
6	6			−470
7	7			−750
8	2.5			+ 30
9	10	10	1.0	Not specified
5				
10				
20				TL1347-2

Figure 153. Capacitor color codes.

RESISTOR COLOR CODES

RMA COLOR CODE FOR FIXED COMPOSITION RESISTORS

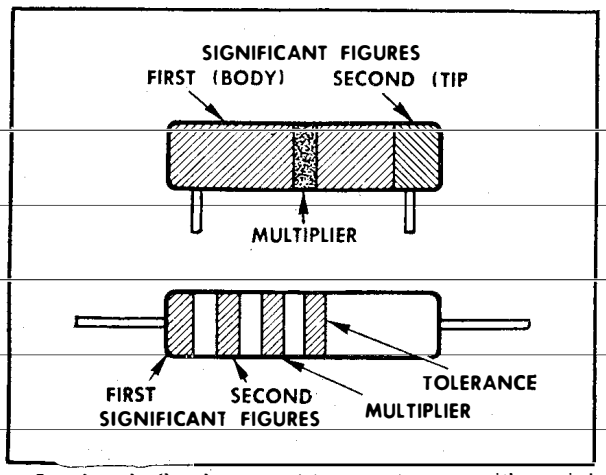

Insulated fixed composition resistors with axial leads are designated by a natural tan background color Non-insulated fixed composition resistors with axial leads are designated by a black background color

AWS COLOR CODE FOR FIXED COMPOSITION RESISTORS

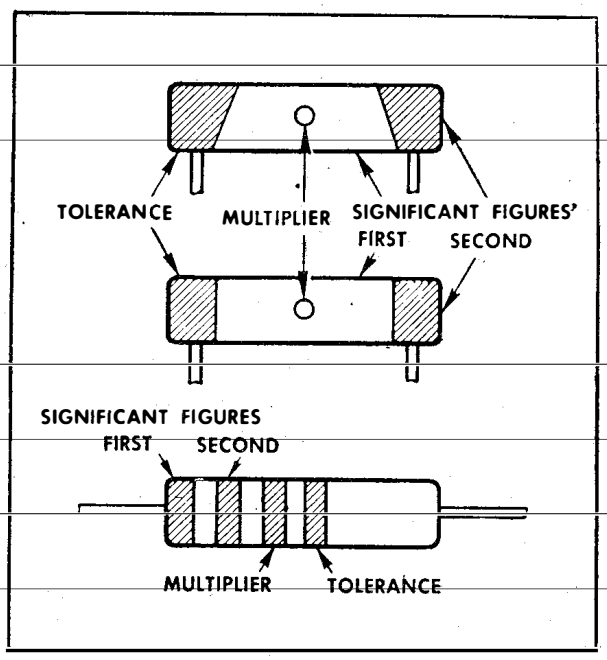

The exterior body color of insulated resistors may be any color except black. The usual color is natural tan. The exterior body color of uninsulated resistors with axial leads may be either black or white. The exterior body color of uninsulated resistors with radial leads may be black or it may be the color of the first significant figure of the resistance value.

COLOR	SIGNIFICANT FIGURE	MULTIPLIER	TOLERANCE (PERCENT)
BLACK	0	1	
BROWN	1	10	
RED	2	100	
ORANGE	3	1000	
YELLOW	4	10,000	
GREEN	5	100,000	
BLUE	6	1,000,000	
VIOLET	7	10,000,000	
GRAY	8	100,000,000	
WHITE	9	1,000,000,000	
GOLD		0 1	5
SILVER		0.01	10
NO COLOR			20

RMA: *Radio Manufacturers Association*
AWS *American War Standard (American Standards Association)*

13418

Figure 154. Resistor color codes.

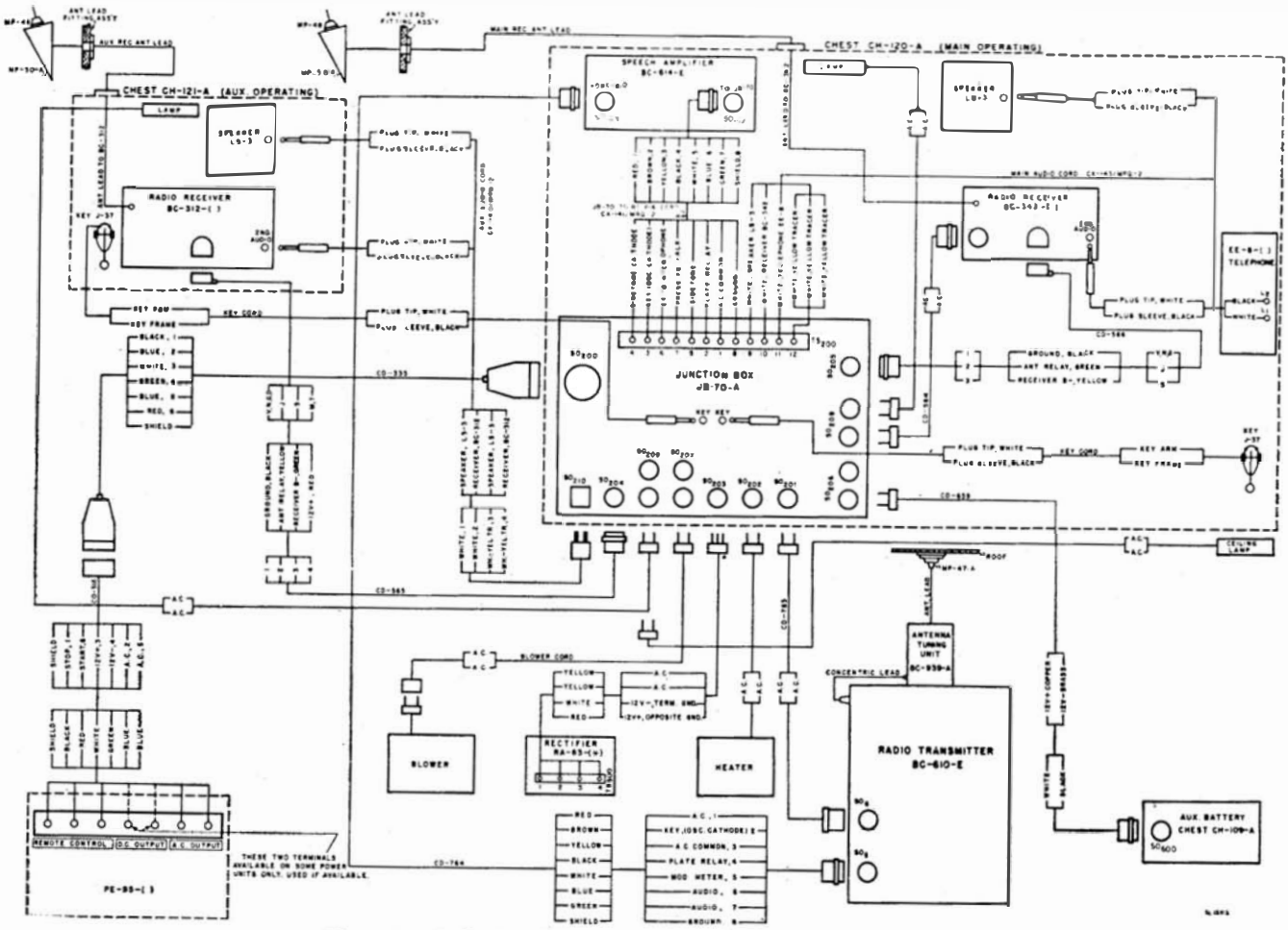

Figure 155. Radio Sets SCR–399–A and SCR–499–A–cording diagram.

TUNING CHART OF RADIO TRANSMITTER BC-610-E

for

Tuning Unit TU-47

NOTE: Use V. C. 50 On 2-2.5 MC

Frequency Range 2.0-2.5 MC

APPROXIMATE DIAL SETTINGS

OPERATING FREQUENCY IN KILOCYCLES	CRYSTAL FREQUENCY IF USED	COIL UNIT	TUNING CONTROLS			P. A. PLATE TUNING	ANTENNA TUNING UNIT BC-939-A		
			M O	DOUB	INT. AMP.		BAND SWITCH POSITION	COUPLING	LOADING
2000	2000	C-387-D	11	2.4	4.7	20	2-10	4.9	4.6
2050	2050	C-387-D	22	3.2	5.2	30	2-10	4.9	7.1
2100	2100	C-387-D	32	3.8	5.5	39	2-10	5.1	9.4
2150	2150	C-387-D	41	4.3	5.9	47.5	2-10	4.9	11.4
2200	2200	C-387-D	49	4.8	6.3	56.5	2-10	4.8	13.3
2250	2250	C-387-D	57	5.2	6.7	63.5	2-10	4.7	15.1
2300	2300	C-387-D	63	5.6	7.0	70	2-10	4.6	16.8
2350	2350	C-387-D	69	6.0	7.4	77	2-10	4.5	18.3
2400	2400	C-387-D	75	6.3	7.7	83	2-10	4.5	19.8
2450	2450	C-387-D	81	6.7	8.0	88	2-10	4.6	21.3
2500	2500	C-387-D	85	7.0	8.2	94	2-10	4.6	22.6

NOTE—FOR EXACT M.O. SETTING, USE FREQUENCY METER SET SCR-211-( )

PART NO. 928105

TUNING CHART OF RADIO TRANSMITTER BC-610-E

for

Tuning Unit TU-48

Frequency Range 2.5-3.2 MC

APPROXIMATE DIAL SETTINGS

OPERATING FREQUENCY IN KILOCYCLES	CRYSTAL FREQUENCY IF USED	COIL UNIT	TUNING CONTROLS			P. A. PLATE TUNING	ANTENNA TUNING UNIT BC-939-A		
			M O	DOUB	INT AMP.		BAND SWITCH POSITION	COUPLING	LOADING
2500	2500	C-387-D	10	0.7	2.8	7	2-10	4.3	22.6
2550	2550	C-387-D	18	1.7	3.4	12.5	2-10	4.3	23.9
2600	2600	C-387-D	26	2.4	3.9	17	2-10	4.3	25.0
2650	2650	C-387-D	33	3.1	4.4	21.5	2-10	4.2	26.2
2700	2700	C-387-D	40	3.7	4.9	25.5	2-10	4.2	27.3
2750	2750	C-387-D	46	4.1	5.3	29.0	2-10	4.2	28.3
2800	2800	C-387-D	52	4.5	5.8	33.0	2-10	4.2	29.3
2850	2850	C-387-D	58	4.9	6.1	36.5	2-10	4.2	30.2
2900	2900	C-387-D	63	5.2	6.5	40.5	2-10	4.5	31.0
2950	2950	C-387-D	68	5.6	6.8	43.5	2-10	4.1	32.0
3000	3000	C-387-D	73	5.9	7.2	47.0	2-10	4.1	32.7
3050	3050	C-387-D	78	6.1	7.4	50.0	2-10	4.1	33.5
3100	3100	C-387-D	82	6.4	7.7	53.0	2-10	4.1	34.2
3150	3150	C-387-D	87	6.6	7.9	55.5	2-10	4.2	35.0
3200	3200	C-387-D	90	6.8	8.0	58.5	2-10	4.2	35.6

NOTE—FOR EXACT M.O. SETTING, USE FREQUENCY METER SET SCR-211-( )

PART NO. 928105

NOTE: VIEW ABOVE SHOWS BOTH FACES OF CHART. FACES COMBINE BACK TO BACK TO MAKE ONE CHART.

TL16681

Figure 156. Tuning chart, Tuning Units TU-47 and TU-48.

TUNING CHART OF RADIO TRANSMITTER BC-610-E

for

Tuning Unit TU-49

Frequency Range 3.2-4.0 MC

APPROXIMATE DIAL SETTINGS

OPERATING FREQUENCY IN KILOCYCLES	CRYSTAL FREQUENCY IF USED	COIL UNIT	TUNING CONTROLS			P.A. PLATE TUNING	ANTENNA TUNING UNIT BC-939-A		
			M.O.	DOUB.	INT. AMP.		BAND SWITCH POSITION	COUPLING	LOADING
3200	3200	C-387-D	25	3.4	5.8	58.5	2-10	4.2	35.6
3250	3250	C-387-D	30	3.8	6.1	61.0	2-10	4.3	36.3
3300	3300	C-387-D	35	4.2	6.3	63.0	2-10	4.3	37.0
3350	3350	C-387-D	40	4.6	6.5	65.5	2-10	4.5	37.5
3400	3400	C-387-D	45	4.9	6.7	67.0	2-10	4.6	38.2
3450	3450	C-387-D	50	5.3	6.9	69.5	2-10	4.7	38.7
3500	3500	C-387-D	55	5.6	7.1	71.5	2-10	5.1	39.3
3500	3500	C-388-D	55	5.6	7.1	21	2-10	3.4	38.9
3550	3550	C-388-C	59	5.9	7.3	23.5	2-10	3.5	39.5
3600	3600	C-388-C	64	6.1	7.5	26.5	2-10	3.5	39.9
3650	3650	C-388-C	68	6.4	7.7	29.5	2-10	3.6	40.4
3700	3700	C-388-C	72	6.6	7.9	32	2-10	3.7	40.9
3750	3750	C-388-C	75	6.8	8.1	35	2-10	3.8	41.3
3800	3800	C-388-C	79	7.0	8.3	37.5	2-10	3.9	41.7
3850	3850	C-388-C	82	7.2	8.5	40.5	2-10	3.9	42.2
3900	3900	C-388-C	85	7.4	8.7	43	2-10	4.0	42.5
3950	3950	C-388-C	88	7.6	8.8	45	2-10	4.0	42.9
4000	4000	C-388-C	91	7.8	8.9	48	2-10	4.0	43.2

NOTE—FOR EXACT M.O. SETTING, USE FREQUENCY METER SET SCR-211-( )

PART NO. 929106

TUNING CHART OF RADIO TRANSMITTER BC-610-E

for

Tuning Unit TU-50

Frequency Range 4.0-5.0 MC

APPROXIMATE DIAL SETTINGS

OPERATING FREQUENCY IN KILOCYCLES	CRYSTAL FREQUENCY IF USED	COIL UNIT	TUNING CONTROLS			P.A. PLATE TUNING	ANTENNA TUNING UNIT BC-939-A		
			M.O.	DOUB.	INT AMP		BAND SWITCH POSITION	COUPLING	LOADING
4000	2000	C-388-C	7	2.2	3.5	48	2-10	4.0	43.2
4050	2025	C-388-C	.13	2.5	3.9	50	2-10	4.0	43.7
4100	2050	C-388-C	19	2.9	4.3	52	2-10	4.0	44.0
4150	2075	C-388-C	24	3.2	4.6	54.5	2-10	3.9	44.3
4200	2100	C-388-C	29	3.5	5.0	56.5	2-10	3.9	44.6
4250	2125	C-388-C	34	3.8	5.3	58.5	2-10	3.9	44.9
4300	2150	C-388-C	39	4.1	5.6	60.5	2-10	4.0	45.2
4350	2175	C-388-C	44	4.4	5.9	62.5	2-10	4.0	45.5
4400	2200	C-388-C	48	4.6	6.1	63.5	2-10	4.0	45.8
4450	2225	C-388-C	52	4.8	6.4	65.5	2-10	4.0	46.1
4500	2250	C-388-C	56	5.1	6.6	67	2-10	4.0	46.3
4500	2250	C-389-C	56	5.1	6.6	12.5	2-10	2.8	46.2
4550	2275	C-389-C	60	5.3	6.6	15	2-10	2.8	46.4
4600	2300	C-389-C	64	5.6	7.0	17.5	2-10	2.9	46.7
4650	2325	C-389-C	67	5.8	7.2	20	2-10	2.9	46.9
4700	2350	C-389-C	71	6.0	7.3	22	2-10	2.8	47.2
4750	2375	C-389-C	74	6.2	7.5	24.5	2-10	2.9	47.4
4800	2400	C-389-C	78	6.4	7.7	26.5	2-10	2.9	47.6
4850	2425	C-389-C	81	6.6	7.8	29	2-10	2.9	47.9
4900	2450	C-389-C	84	6.8	8.0	31	2-10	2.9	48.1
4950	2475	C-389-C	88	7.0	8.2	33	2-10	2.8	48.3
5000	2500	C-389-C	91	7.1	8.4	35.5	2-10	2.8	48.5

NOTE—FOR EXACT M.O. SETTING, USE FREQUENCY METER SET SCR-211-( )

PART NO. 929106

NOTE: VIEW ABOVE SHOWS BOTH FACES OF CHART. FACES COMBINE BACK TO BACK TO MAKE ONE CHART.

TL 15950

Figure 157. Tuning chart, Tuning Units TU-49 and TU-50.

TUNING CHART OF RADIO TRANSMITTER BC-610-E

for

Tuning Unit TU-51

Frequency Range 5-6.35 MC

APPROXIMATE DIAL SETTINGS

OPERATING FREQUENCY IN KILOCYCLES	CRYSTAL FREQUENCY IF USED	COIL UNIT	TUNING CONTROLS			P.A. PLATE TUNING	ANTENNA TUNING UNIT BC-939-A		
			M.O.	DOUB.	INT. AMP.		BAND SWITCH POSITION	COUPLING	LOADING
5000	2500	C-389-C	5	2.5	4.0	35.5	2-10	2.8	48.5
5050	2525	C-389-C	10	2.8	4.3	37.5	2-10	2.8	48.7
5100	2550	C-389-C	15	3.1	4.6	39.5	2-10	2.8	48.9
5150	2575	C-389-C	19	3.4	4.8	41.5	2-10	2.8	49.1
5200	2600	C-389-C	23	3.7	5.1	43	2-10	2.8	49.3
5250	2625	C-389-C	27	3.9	5.3	45	2-10	2.8	49.5
5300	2650	C-389-C	31	4.2	5.6	47	2-10	2.8	49.6
5350	2675	C-389-C	34	4.4	5.8	48.5	2-10	2.8	49.8
5400	2700	C-389-C	38	4.6	6.0	50.5	2-10	2.8	50.0
5450	2725	C-389-C	41	4.8	6.2	52	2-10	2.8	50.1
5500	2750	C-389-C	44	5.0	6.4	54	2-10	2.8	50.4
5550	2775	C-389-C	48	5.2	6.6	55.5	2-10	2.8	50.5
5600	2800	C-389-C	51	5.4	6.7	57	2-10	2.8	50.7
5650	2825	C-389-C	55	5.5	6.9	58.5	2-10	2.8	50.9
5700	2850	C-389-C	58	5.7	7.1	60	2-10	2.8	51.0
5750	2875	C-390-C	59	5.7	7.1	61	2-10	2.3	50.9
5800	2900	C-390-C	61	5.9	7.2	63	2-10	2.2	51.0
5850	2925	C-390-C	64	6.1	7.4	65	2-10	2.3	51.2
5900	2950	C-390-C	66	6.2	7.5	66.5	2-10	2.2	51.3
5950	2975	C-390-C	69	6.4	7.7	68.5	2-10	2.2	51.4
6000	3000	C-390-C	72	6.5	7.8	69.5	2-10	2.3	51.5
6050	3025	C-390-C	74	6.7	8.0	71.5	2-10	2.3	51.7
6100	3050	C-390-C	77	6.8	8.1	73.5	2-10	2.3	51.9
6150	3075	C-390-C	79	7.0	8.2	75	2-10	2.3	51.9
6200	3100	C-390-C	82	7.1	8.4	76.5	2-10	2.3	52.0
6250	3125	C-390-C	84	7.2	8.5	78.5	2-10	2.3	52.2
6300	3150	C-390-C	87	7.3	8.7	80	2-10	2.3	52.3
6350	3175	C-390-C	89	7.5	8.8	81.5	2-10	2.3	52.5
			90	7.5	8.9	83.5	2-10	2.3	52.5

NOTE—FOR EXACT M.O. SETTING, USE FREQUENCY METER SET SCR-211-[ ]

PART NO. 928187

TUNING CHART OF RADIO TRANSMITTER BC-610-E

for

Tuning Unit TU-52

Frequency Range 6.35-8.0 MC

APPROXIMATE DIAL SETTINGS

OPERATING FREQUENCY IN KILOCYCLES	CRYSTAL FREQUENCY IF USED	COIL UNIT	TUNING CONTROLS			P.A. PLATE TUNING	ANTENNA TUNING UNIT BC-939-A		
			M.O.	DOUB.	INT. AMP.		BAND SWITCH POSITION	COUPLING	LOADING
6350	3175	C-390-C	8	4.4	2.8	43.5	2-10	2.3	52.5
6400	3200	C-390-C	10	4.6	3.3	45	2-10	2.2	52.7
6500	3250	C-390-C	17	5.0	3.8	47.5	2-10	2.2	53.0
6600	3300	C-390-C	23	5.4	4.2	50.5	2-10	2.2	53.1
6700	3350	C-390-C	29	5.8	4.7	53	2-10	2.2	53.4
6800	3400	C-390-C	35	6.1	5.1	55	2-10	2.2	53.6
6900	3450	C-390-C	41	6.4	5.6	58	2-10	2.2	53.7
7000	3500	C-390-C	47	6.6	6.0	60.5	2-10	2.2	54.0
7100	3550	C-390-C	52	6.9	6.4	63	2-10	2.2	54.2
7200	3600	C-390-C	57	7.1	6.8	65	2-10	2.2	54.4
7300	3650	C-390-C	62	7.3	7.1	67	2-10	2.2	54.5
7400	3700	C-390-C	67	7.5	7.4	69	2-10	2.2	54.7
7500	3750	C-390-C	71	7.7	7.7	71	2-10	2.2	54.9
7600	3800	C-390-C	75	7.9	8.0	72.5	2-10	2.2	55.1
7700	3850	C-390-C	79	8.1	8.2	74.5	2-10	2.2	55.2
7800	3900	C-390-C	83	8.3	8.4	76	2-10	2.1	55.4
7900	3950	C-390-C	87	8.4	8.6	77.5	2-10	2.1	55.5
8000	4000	C-390-C	91	8.5	8.8	78.5	2-10	2.1	55.7

NOTE—FOR EXACT M.O. SETTING, USE FREQUENCY METER SET SCR-211-[ ]

PART NO. 928187

NOTE: VIEW ABOVE SHOWS BOTH FACES OF CHART. FACES COMBINE BACK TO BACK TO MAKE ONE CHART.

TL15948

Figure 158. Tuning chart, Tuning Units TU-51 and TU-52.

TUNING CHART OF RADIO TRANSMITTER BC-610-E

for

Tuning Unit TU-53

Frequency Range 8.0-12.0 MC

APPROXIMATE DIAL SETTINGS

OPERATING FREQUENCY IN KILOCYCLES	CRYSTAL FREQUENCY IF USED	COIL UNIT	TUNING CONTROLS			P.A. PLATE TUNING	ANTENNA TUNING UNIT BC-939-A		
			M.O.	DOUB	INT AMP		BAND SWITCH POSITION	COUPLING	LOADING
8000	4000	C-447-B	6	1.5	1.5	20.5	2-10	1.5	55.5
8100	4050	C-447-B	9	1.8	1.8	23.5	2-10	1.5	55.7
8200	4100	C-447-B	13	2.0	2.0	26.	2-10	1.5	559
8300	4150	C-447-B	16	2.3	2.3	28.5	2-10	1.5	56.1
8400	4200	C-447-B	19	2.6	2.6	31	2-10	1.5	56.1
8500	4250	C-447-B	23	2.8	2.8	33.5	2-10	1.5	56.2
8600	4300	C-447-B	26	3.1	3.1	36	2-10	1.5	56.4
8700	4350	C-447-B	29	3.3	3.3	38.5	2-10	1.5	56.5
8800	4400	C-447-B	32	3.6	3.6	41	2-10	1.5	56.7
8900	4450	C-447-B	35	3.8	3.8	43	2-10	1.5	56.8
9000	4500	C-447-B	38	4.0	4.0	45.5	2-10	1.5	57.1
9100	4550	C-447-B	41	4.2	4.2	47.5	2-10	1.5	57.3
9200	4600	C-447-B	43	4.3	4.3	49.5	2-10	1.5	57.4
9300	4650	C-447-B	46	4.5	4.5	52	2-10	1.5	57.5
9400	4700	C-447-B	49	4.7	4.7	53.5	2-10	1.5	57.7
9500	4750	C-447-B	51	4.9	4.9	55.5	2-10	1.5	57.7
9600	4800	C-447-B	53	5.1	5.1	57.5	2-10	1.5	57.8
9700	4850	C-447-B	55	5.3	5.3	59	2-10	1.5	58.0
9800	4900	C-447-B	57	5.4	5.4	60.5	2-10	1.4	58.3
9900	4950	C-447-B	59	5.6	5.6	63	2-10	1.4	58.4
10,000	5000	C-447-B	61	5.7	5.7	64.5	2-10	1.4	58.5

NOTE—FOR EXACT M.O. SETTING, USE FREQUENCY METER SET SCR-211-( )

(OVER) PART NO. 929106

TUNING CHART OF RADIO TRANSMITTER BC-610-E

for

Tuning Unit TU-53

Frequency Range 8.0-12.0 MC

APPROXIMATE DIAL SETTINGS

OPERATING FREQUENCY IN KILOCYCLES	CRYSTAL FREQUENCY IF USED	COIL UNIT	TUNING CONTROLS			P.A. PLATE TUNING	ANTENNA TUNING UNIT BC-939-A		
			M.O.	DOUB	INT AMP		BAND SWITCH POSITION	COUPLING	LOADING
10,000	5000	C-447-B	61	5.7	5.7	64.5	10-18	1.1	*2.5
10,100	5050	C-447-B	63	5.8	5.8	65.5	10-18	1.1	*2.7
10,200	5100	C-447-B	65	6.0	6.0	67	10-18	1.1	*3.0
10,300	5150	C-447-B	67	6.2	6.2	68.5	10-18	1.1	*3.4
10,400	5200	C-447-B	68	6.3	6.3	70	10-18	1.1	*3.7
10,500	5250	C-447-B	70	6.4	6.4	71.5	10-18	1.1	*4.0
10,600	5300	C-447-B	72	6.6	6.6	72.5	10-18	1.1	*4.5
10,700	5350	C-447-B	73	6.7	6.7	74	10-18	1.1	*4.7
10,800	5400	C-447-B	75	6.8	6.8	75	10-18	1.1	*5.0
10,900	5450	C-447-B	76	7.0	7.0	76.5	10-18	1.1	*5.3
11,000	5500	C-447-B	78	7.1	7.1	77.5	10-18	1.1	*5.7
11,000	5500	C-448-B	78	7.1	7.1	37	10-18	1.2	*5.6
11,100	5550	C-448-B	79	7.2	7.2	39	10-18	1.2	*5.8
11,200	5600	C-448-B	81	7.3	7.3	40.5	10-18	1.2	*6.1
11,300	5650	C-448-B	82	7.4	7.4	42.5	10-18	1.2	*6.5
11,400	5700	C-448-B	83	7.5	7.5	44.5	10-18	1.2	*6.7
11,500	5750	C-448-B	84	7.6	7.6	46	10-18	1.2	*7.0
11,600	5800	C-448-B	85	7.7	7.7	48	10-18	1.2	*7.1
11,700	5850	C-448-B	86	7.8	7.8	49.5	10-18	1.2	*7.4
11,800	5900	C-448-B	87	7.9	7.9	51	10-18	1.2	*7.7
11,900	5950	C-448-B	88	8.0	8.0	52.5	10-18	1.2	*7.9
12,000	6000	C-448-B	90	8.1	8.1	54.5	10-18	1.2	*8.1

NOTE—FOR EXACT M.O. SETTING, USE FREQUENCY METER SET SCR-211-( )

*Set L.F. Loading Coil at 30

PART NO. 928106

NOTE: VIEW ABOVE SHOWS BOTH FACES OF CHART. FACES COMBINE BACK TO BACK TO MAKE ONE CHART

TL 16680

Figure 159. Tuning chart, Tuning Unit TU-53.

TUNING CHART OF RADIO TRANSMITTER BC-610-E

for

Tuning Unit TU-54

Frequency Range 12-18 MC

APPROXIMATE DIAL SETTINGS

OPERATING FREQUENCY IN KILOCYCLES	CRYSTAL FREQUENCY IF USED	COIL UNIT	TUNING CONTROLS			P A PLATE TUNING	ANTENNA TUNING UNIT BC-939-A		
			M O	DOUB	INT AMP		BAND SWITCH POSITION	COUPLING	LOADING
12,000	3000	C-448-B	6	.3	1.1	54.5	10-18	1.2	*8.1
12,100	3025	C-448-B	9	.4	1.4	55.5	10-18	1.2	*8.4
12,200	3050	C-448-B	12	.6	1.6	57	10-18	1.1	*8.6
12,300	3075	C-448-B	14	.8	1.8	58.5	10-18	1.1	*8.8
12,400	3100	C-448-B	17	1.0	2.1	60	10-18	1.1	*9.0
12,500	3125	C-448-B	19	1.2	2.3	61	10-18	1.1	*9.2
12,600	3150	C-448-B	21	1.4	2.5	62.5	10-18	1.1	*9.5
12,700	3175	C-448-B	23	1.5	2.7	64	10-18	1.1	*9.8
12,800	3200	C-448-B	25	1.7	2.9	65	10-18	1.1	*9.9
12,900	3225	C-448-B	27	1.8	3.1	66.5	10-18	1.1	*10.0
13,000	3250	C-448-B	29	1.9	3.2	67.5	10-18	1.1	*10.3
13,100	3275	C-448-B	31	2.1	3.3	69	10-18	1.1	*10.4
13,200	3300	C-448-B	33	2.2	3.5	70	10-18	1.1	*10.7
13,300	3325	C-448-B	35	2.4	3.7	71	10-18	1.1	*10.8
13,400	3350	C-448-B	37	2.5	3.8	72	10-18	1.1	*11.0
13,500	3375	C-448-B	38	2.6	4.0	73	10-18	1.1	*11.2
13,600	3400	C-448-B	40	2.7	4.1	74.5	10-18	1.1	*11.3
13,700	3425	C-448-B	41	2.8	4.3	75	10-18	1.1	*11.6
13,800	3450	C-448-B	43	3.0	4.4	76.5	10-18	1.1	*11.6
13,900	3475	C-448-B	45	3.1	4.5	77	10-18	1.0	*11.8
14,000	3500	C-448-B	46	3.2	4.6	78	10-18	1.0	*11.9

NOTE—FOR EXACT M.O. SETTING, USE FREQUENCY METER SET SCR-211-( )

*Set L.F. Loading Coil at 30

(OVER)

PART NO. 928109

TUNING CHART OF RADIO TRANSMITTER BC-610-E

for

Tuning Unit TU-54

Frequency Range 12-18 MC

APPROXIMATE DIAL SETTINGS

OPERATING FREQUENCY IN KILOCYCLES	CRYSTAL FREQUENCY IF USED	COIL UNIT	TUNING CONTROLS			P A PLATE TUNING	ANTENNA TUNING UNIT BC-939-A		
			M O	DOUB	INT AMP		BAND SWITCH POSITION	COUPLING	LOADING
14,000	3500	C-449-B	46	3.2	4.6	37.5	10-18	1.1	*12.0
14,200	3550	C-449-B	49	3.4	4.8	40.5	10-18	1.1	*12.3
14,400	3600	C-449-B	52	3.6	5.1	43	10-18	1.1	*12.4
14,600	3650	C-449-B	55	3.8	5.3	46	10-18	1.1	*12.8
14,800	3700	C-449-B	58	3.9	5.5	48.5	10-18	1.1	*13.0
15,000	3750	C-449-B	61	4.1	5.7	52.5	10-18	1.1	*13.2
15,200	3800	C-449-B	63	4.3	5.8	54.5	10-18	1.1	*13.6
15,400	3850	C-449-B	65	4.5	6.1	57	10-18	1.0	*13.8
15,600	3900	C-449-B	68	4.7	6.2	59	10-18	1.0	*14.2
15,800	3950	C-449-B	70	4.8	6.4	61.5	10-18	1.0	*14.2
16,000	4000	C-449-B	72	5.0	6.6	63	10-18	1.0	*14.4
16,200	4050	C-449-B	74	5.2	6.7	65	10-18	1.0	*14.6
16,400	4100	C-449-B	76	5.3	6.8	67	10-18	0.9	*14.7
16,600	4150	C-449-B	78	5.5	6.9	69	10-18	0.9	*14.7
16,800	4200	C-449-B	80	5.6	7.1	71	10-18	0.8	*14.9
17,000	4250	C-449-B	82	5.7	7.2	73	10-18	0.8	*15.1
17,200	4300	C-449-B	84	5.8	7.4	75	10-18	0.8	*15.4
17,400	4350	C-449-B	85	5.9	7.5	76.5	10-18	0.7	*15.4
17,600	4400	C-449-B	87	6.1	7.7	77	10-18	0.5	*15.6
17,800	4450	C-449-B	89	6.2	7.9	80	10-18	0.4	*16.0
18,000	4500	C-449-B	91	6.3	8.1	82	10-18	0.4	*16.3

NOTE—FOR EXACT M.O. SETTING, USE FREQUENCY METER SET SCR-211-( )

*Set L.F. Loading Coil at 30

PART NO. 928109

NOTE: VIEW ABOVE SHOWS BOTH FACES OF CHART. FACES COMBINE BACK TO BACK TO MAKE ONE CHART.

TL15949

Figure 160. Tuning chart, Tuning Unit TU-54.